Impeller Data Industrial®

Transmitters

Model 320 Programmable Pulse

DESCRIPTION

The Model 320 programmable pulse transmitter from Badger Meter® is designed to accept relatively fast unscaled raw pulses from devices like flow sensors, and then output slow-scaled pulses of programmable width, pulse resolution and units of measure. In addition to our standard flow sensors, the Model 320 transmitter can also accept a sine wave signal, making it a versatile choice for numerous applications.

With an onboard microcontroller and digital circuitry, the Model 320 transmitter is programmed using a Windows®-based computer program. This eliminates the need to set dip switches and produces precise, accurate and drift-free signals of high resolution.

The compact cast epoxy body measures 1.75 × 2.75 × 1 in. (44 × 70 × 25 mm) and can easily be mounted to panels, DIN rails or enclosures. With multiple inputs, ease of use and a variety of enclosures, the Model 320 transmitter is a powerful and competitive choice for many of today's demanding applications.

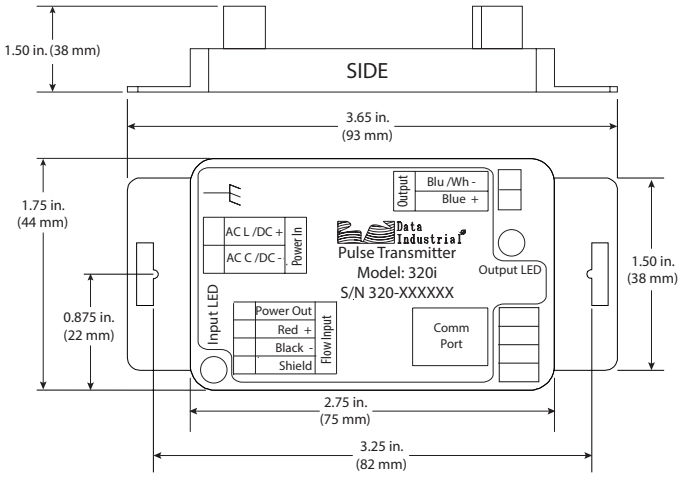

Figure 1: Transmitter dimensions

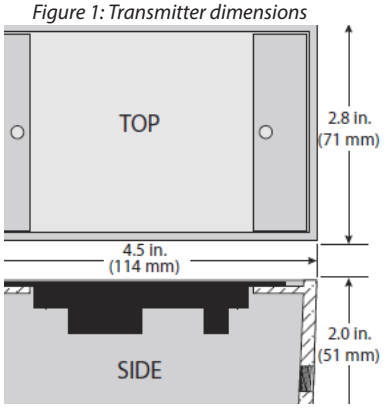

Figure 2: Optional enclosure (Ver. 320-02 and 320-03)

	8320	-	xx
SERIES			
Programmable Pulse Transmitter	8320	[redacted]	
OPTIONS			
Transmitter Only			00
W / NEMA 4X Enclosure			01
W / Metal Weathertite Enclosure			02
W / Plastic Weathertite Enclosure			03
W / DIN Rail Mounting Clips			04

Figure 3: Model 320 ordering matrix

SPECIFICATIONS

Power	• 12…28V AC RMS, 85 mA max • 12…40V DC, 30 mA max • Reverse and over voltage protected
Input Frequency	0.4…10 kHz
Transient Suppression	Complies with IEC-801-4 electrical burst, fast transient specification
Pulse Output	• Isolated solid-state switch in any standard or custom flow • Adjustable 50 mS to 1.0 second pulse output width in 50 mS increments • Maximum sinking current: 100 mA at 36V DC
Temperature	• Operating: –20…158° F (–29…70° C) • Storage: –40…185° F (–40…85° C)

CALIBRATION

Units can be calibrated at our facility or easily programmed in the field. Field calibration requires an 840134-0002 programming kit (consisting of a custom cable and software) and a computer (PC) running a Windows® operating system. To calibrate, the Model 310 must be connected to the loop for power and the 840134-0002 programming kit cable must be connected to the computer. When the software is loaded and communications with the transmitter are established, the following parameters are entered on the setup screens:

- Units of measure
- K and Offset values manually entered from values in sensor operator's manual or automatically entered using the *CALCULATE* button
- Units per output pulse
- Filter setting
- Pulse width

When the values are set, the *SEND* command loads the transmitter. A full explanation of all settings is available in the software help file.

WIRING

Per standard wiring practices, the loop power must be off before making any wire connections. The terminal strips have removable plug-in connectors to make wiring easier. Refer to *Figure 4* for terminal connections. An example of typical wiring is shown in *Figure 5*.

1. Connect power supply positive (+) or AC Load to terminal marked AC L /DC (+).
2. Connect power supply negative (–) or AC Common to terminal marked AC C /DC (–).
3. If wiring a **200** sensor, connect the red wire to the Red (+) terminal, black wire to Black (–) terminal, and the shield to the Shield terminal (Disregard shield for the IR sensors).

   If wiring a **4000** sensor, connect the red wire to the Power Out terminal, clear wire to Red (+) terminal, black wire to Black (–) terminal, and shield wire to the Shield terminal.

   If wiring to a **sine wave output** sensor, consult the factory.
4. Connect Pulse (+) from pulse input device to Blue (+) of the Model 320 transmitter. Connect Pulse (–) from pulse input device to Blu /Wh (–) of the Model 320 transmitter.

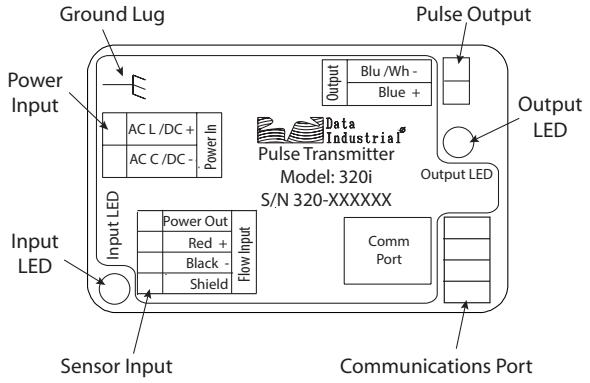

Figure 4: Terminal connections

5. For maximum EMI protection, connect the ground lug to panel ground.
6. Make sure all connections are tight, then plug the connector into the header.

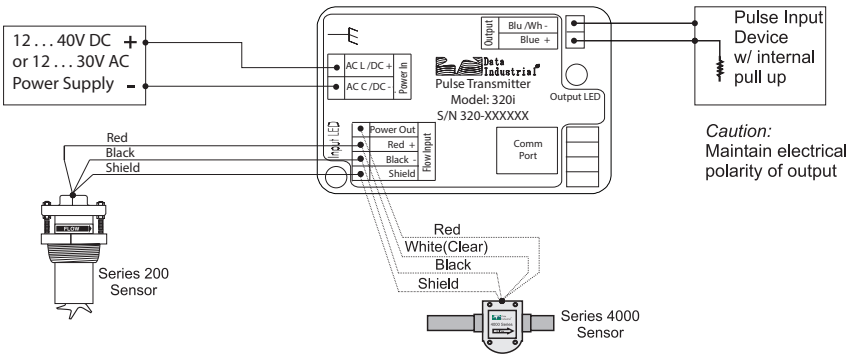

Figure 5: Example of typical wiring

Control. Manage. Optimize.

Data Industrial is a registered trademark of Badger Meter, Inc. Other trademarks appearing in this document are the property of their respective entities. Due to continuous research, product improvements and enhancements, Badger Meter reserves the right to change product or system specifications without notice, except to the extent an outstanding contractual obligation exists. © 2023 Badger Meter, Inc. All rights reserved.

www.badgermeter.com