ORION®
Cellular/Fixed Network Solutions

ORION® Water Endpoints

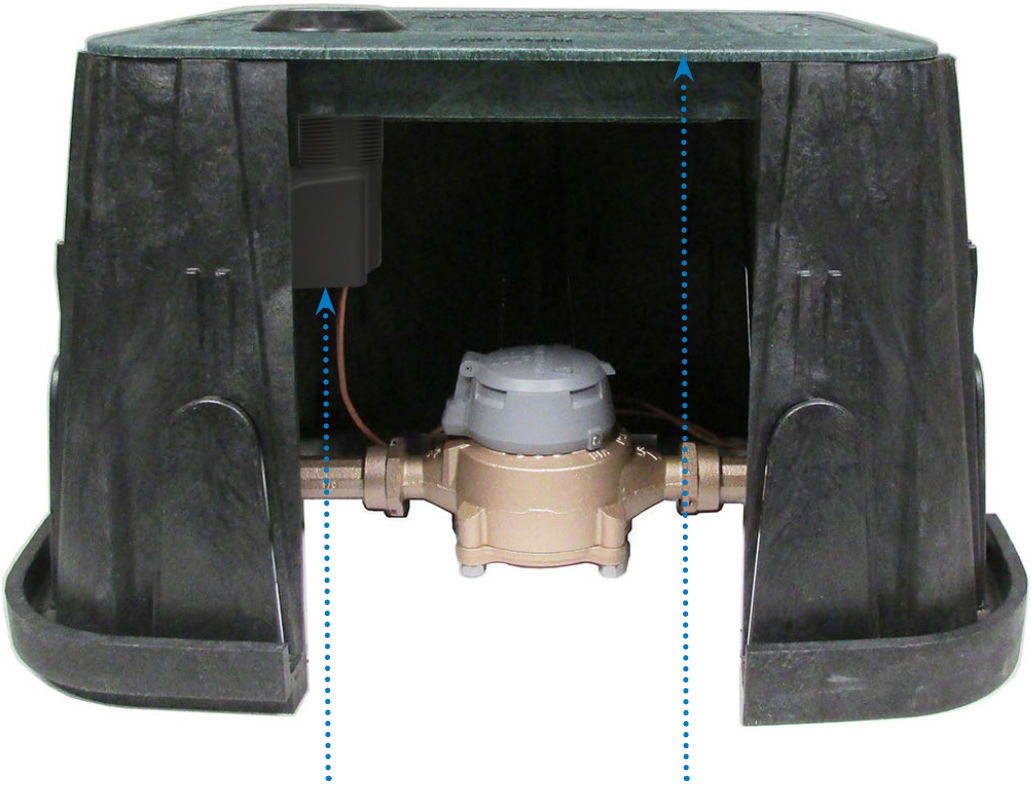

Image shown represents ORION Cellular C endpoint installed, as per instructions, through non-metal pit lid

Badger Meter

ORI-UM-00025-EN-38 (September 2025)

Installation Manual

CONTENTS

SCOPE OF THIS MANUAL . . . 3
Additional Resources . . . 3
PRODUCT UNPACKING AND INSPECTION . . . 3
LICENSE REQUIREMENTS . . . 3
IDENTIFICATION . . . 4
ORION CELLULAR ENDPOINTS . . . 6
Serial Number Ranges and FCC Labels . . . 6
Endpoint Configurations . . . 6
Installation Guidelines (Indoor, Outdoor, Pit) . . . 7
Endpoint Activation. . . . 7
ORION MOBILE M, ME AND SE ENDPOINTS . . . 8
Endpoint Configurations . . . 8
Installation Guidelines (Indoor, Outdoor, Pit) . . . 9
Endpoint Activation. . . . 9
ORION CLASSIC ENDPOINTS . . . 10
Endpoint Configurations . . . 10
Installation Guidelines (Indoor, Outdoor, Pit) . . . 11
Endpoint Activation. . . . 11
ACTIVATING ENDPOINTS . . . 12
CHANGING REGISTRATION FOR AN EXISTING ENDPOINT ASSEMBLY . . . 13
ENDPOINT INSTALLATION KITS . . . 14
64394-032 WALL COVER INSTALL KIT . . . 15
67625-001 IR Holder for Wall Cover Install Kit . . . 16
Outdoor Installation for Endpoint with Inline Connector . . . 17
64394-031 WALL BRACKET INSTALL KIT - ORION CELLULAR LTE . . . 17
69406-001 MOUNTING BRACKET INSTALL KIT FOR ORION ENDPOINT AND E-SERIES ULTRASONIC METER . . . 18
64394-029 WALL BRACKET INSTALL KIT . . . 19
64394-008 C-CLAMP WALL BRACKET INSTALL KIT . . . 20
64394-003 PIPE INSTALL KIT . . . 21
64394-023 COMMERCIAL METER MOUNTING BRACKET INSTALL KIT . . . 22
64394-030 THRU-THE-LID INSTALL KIT . . . 23
64394-009 INTEGRATED PIT LID HANGER INSTALL KIT . . . 24
INTEGRAL ENDPOINT INSTALLATION . . . 25
ENDPOINT STATUS TOOL FOR ORION CELLULAR ENDPOINTS . . . 29
INLINE CONNECTORS . . . 31
USING GEL CAPS TO CONNECT AN ENCODER . . . 33

SCOPE OF THIS MANUAL

This manual contains installation instructions for ORION® water endpoints: ORION Cellular endpoints—C, HLD, HLFX, HLG, CS, LTE-M, LTE-MS, HLA, HLB, HLC, LTE— and the ORION Mobile M, ME, Fixed Network (SE) and Classic (CE) endpoints.

ORION endpoints installation must comply with all applicable federal, state and local rules, regulations and codes.

Failure to read and follow these instructions can lead to misapplication or misuse of this product, resulting in personal injury and damage to equipment.

Proper performance and reliability of ORION endpoints depend upon installation in accordance with these instructions. Endpoints not properly installed may not be covered under warranty.

WARNING: The operation of transmitters and receivers on airlines is strictly prohibited by the Federal Aviation Administration. As such, the shipping of radios and endpoints via air is prohibited. Please follow all Badger Meter return and/or shipping procedures to prevent exposure to liability.

Additional Resources

These related documents are available at *www.badgermeter.com*

- *ORION Water Endpoint Installation Kits Ordering Guide*
- *Product Configuration Utility Manual for ORION Endpoints*
- *ORION Cellular Lens Endpoints Quick Start Guide*
- *IR Communication Device Updating Firmware (UTL-AS-03461-EN)*
- *ORION Cellular HLB Endpoint Installation Manual*
- *ORION Endpoint Utility Software Manual*
- *IR Communication Device Quick Reference Guide (UTL-QG-03116-EN)*

PRODUCT UNPACKING AND INSPECTION

Upon receipt of the product, perform the following unpacking and inspection procedures.

NOTE: If damage to shipping container is evident upon receipt, request the carrier to be present when product is unpacked.

Carefully open the shipping package, following any instructions that may be marked on the exterior. Remove all cushioning material surrounding the product.

ORION Endpoints: Carefully remove the pre-wired ORION endpoint or ORION endpoint encoder assembly from the container and inspect for damage. Retain the contents of the installation kit for use in mounting the endpoint in the field.

Other products: Carefully lift the product from the package. Visually inspect the product and applicable accessories for any physical damage such as scratches, loose or broken parts or any other sign of damage that may have occurred during shipment. Retain the package and all packing material for possible use in reshipment or storage.

NOTE: If damage is found, request an inspection by the carrier's agent within 48 hours of delivery and file a claim with the carrier. A claim for equipment damage in transit is the sole responsibility of the purchaser.

LICENSE REQUIREMENTS

ORION Cellular C, HLD, HLFX, HLG, CS, LTE-M, LTE-MS, HLA, HLB, HLC, LTE endpoints comply with Part 15, Part 22, Part 24, and Part 27 of FCC Rules. ORION Mobile M, ME, SE and CE endpoints comply with Part 15 of FCC Rules. Operation is subject to the following conditions: (1) These devices may not cause harmful interference, and (2) these devices must accept any interference received, including interference that may cause undesired operation of the device.

In accordance with FCC Regulations, "Code of Federal Regulations" Title 47, Part 2, Subpart J, Section 1091, transmitters pass the requirements pertaining to radiation exposure. However, to avoid public exposure in excess of limits for general population (uncontrolled exposure), a 20 centimeter distance between the transmitter and the body of the user must be maintained during operation.

No FCC license is required by a utility to operate an ORION meter reading system.

This device complies with Industry Canada license-exempt RSS standard(s). Operation is subject to the following two conditions: (1) this device may not cause interference, and (2) this device must accept any interference, including interference that may cause undesired operation of the device.

Le présent appareil est conforme aux CNR d'Industrie Canada applicables aux appareils radio exempts de licence. L'exploitation est autorisée aux deux conditions suivantes : (1) l'appareil ne doit pas produire de brouillage, et (2) l'utilisateur de l'appareil doit accepter tout brouillage radioélectrique subi, même si le brouillage est susceptible d'en compromettre le fonctionnement.

IDENTIFICATION

Endpoints

The ORION water endpoint is a three-wire metering device for indoor/outdoor use. Each endpoint has a unique numeric serial number on the tag attached to the cable harness (wire) and etched on the endpoint housing. Endpoints require connection to an encoder to complete the assembly. Badger Meter encoders are shown in *Figure 4*.

Refer to *"ORION Cellular Endpoints" on page 6, "ORION Mobile M, ME and SE Endpoints" on page 8* and *"ORION Classic Endpoints" on page 10* to see endpoint photos.

Endpoint Dimensions

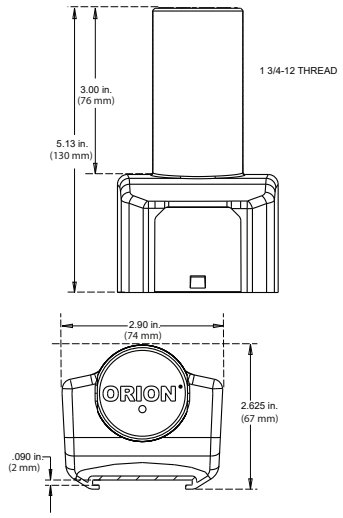

Figure 1: ORION Cellular and ORION Mobile M endpoint dimensions

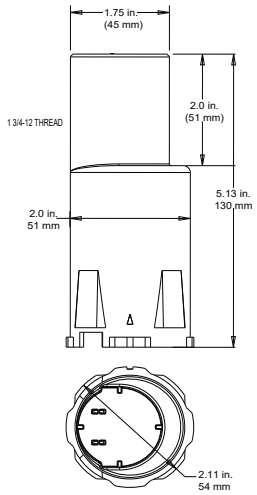

Figure 2: ORION ME, SE, CE endpoint dimensions

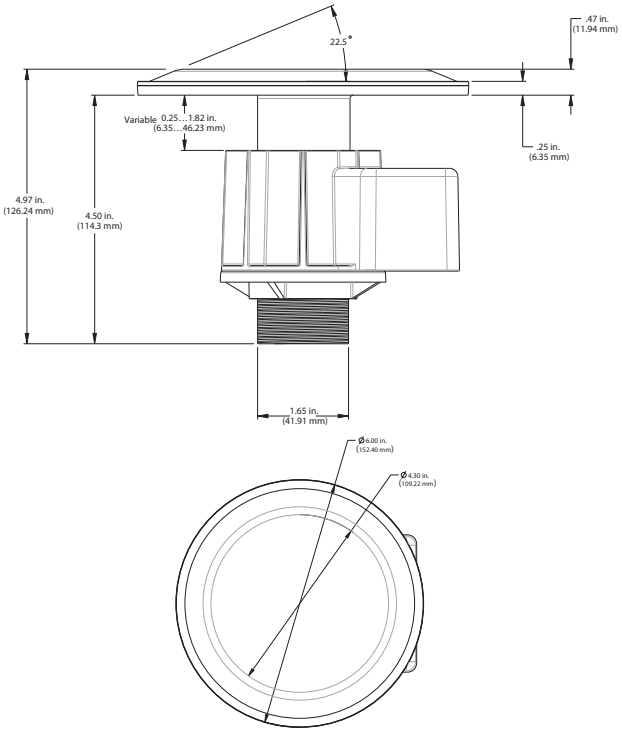

Figure 3: ORION Cellular Lens endpoint dimensions

Encoders/Register

The encoder connects to the endpoint to complete the assembly. Each Badger Meter encoder is identified on the face of the register with an assembly number, unit of measure and meter model. Current and legacy products are shown below.

Current Products

E-Series G2® Ultrasonic meter

High Resolution LCD Encoder (HR-E® LCD)

E-Series® Ultrasonic meter with High Resolution LCD Encoder

High Resolution 8-Dial Encoder (HR-E®)

Legacy Products

Absolute Digital Encoder (ADE®)

Recordall® Transmitter Register (RTR®)

Figure 4: Meters, encoders, register

ORION CELLULAR ENDPOINTS

This section discusses configuration, encoder compatibility and installation for ORION Cellular endpoints.

ORION Cellular endpoints: C, HLD, HLG, CS, LTE-M, LTE-MS, HLA, HLB and HLC (charcoal gray)

ORION Cellular HLFX Lens endpoint (light gray)

ORION Cellular LTE endpoint (medium gray)

Figure 5: ORION Cellular endpoints

Serial Number Ranges and FCC Labels

ORION Cellular Endpoint	Serial Number Range	FCC Label Color		ORION Cellular Endpoint	Serial Number Range	FCC Label Color
HLG	180000000…189999999	pink		C	130000000…139999999	yellow
HLFX	170000000…179999999	engraved		CS	130000000…139999999	white
HLD	160000000…169999999	white		LTE-M	120000000…129999999	yellow
HLB	150000000…159999999	yellow		LTE-MS	120000000…129999999	white
HLC	149000000…149999999	green		LTE	110000000…119999999	yellow
HLA	140000000…148999999	orange				

The serial number is engraved on one side of the endpoint base, and the FCC label is displayed on the other. ORION HLFX serial number is under the antenna.

Figure 6: ORION Cellular endpoints FCC labels

Endpoint Configurations

Endpoint Configurations	Encoder Connection
Endpoint only with inline connector (Twist Tight® or Nicor®)	Connect the endpoint to an encoder using the inline connector. See *"Inline Connectors" on page 31*.
Endpoint only with flying lead for field splice	See *Field Wiring, Encoder Connectivity and Read Resolution* below.
Endpoint/encoder assembly with inline connector	Endpoint/encoder assemblies (endpoints connected by an inline connector to a Badger Meter encoder) are shipped from the factory, ready for installation. See *Field Wiring, Encoder Connectivity and Read Resolution* and *"Inline Connectors" on page 31*.

Field Wiring, Encoder Connectivity and Read Resolution

ORION Cellular endpoints with flying leads are shipped from the factory pre-programmed. Connect all three endpoint wires to an encoder to complete installation. The endpoint can be connected to existing wires from the encoder or directly to the encoder terminal screws, depending on the application and manufacturer. Endpoints can be connected to Badger Meter high resolution encoders and E-Series Ultrasonic meters as well as a number of competitive encoders. See the wiring chart on the next page.

NOTE: For instructions on field wiring using gel connectors, see *"Using Gel Caps to Connect an Encoder" on page 33.* Follow the manufacturer's instructions provided with the gel cap/field splice kit you are using.

ORION endpoint wires: Red = Power/Clock; Black = Ground; Green = Data

Endpoint Label	Encoder Connectivity		Endpoint Wire Colors Red	Black	Green	Reading Resolution
ORION Cellular C, HLD, HLFX, HLG, CS, LTE-M, LTE-MS, HLA, HLB, HLC, LTE	Badger Meter HR-E LCD or HR-E encoders or E-Series Ultrasonic and Ultrasonic Plus Meter with High Resolution output	Encoder Wire/Termination Colors	Red	Black	Green	Up to nine (9) most significant digits
	Honeywell® (Elster/ABB) ScanCoder, evoQ4 meter with Sensus® protocol module*		Green	Black	Red	Up to nine (9) most significant digits
	Metron-Farnier Hawkeye*		Red	Black	Green	Up to nine (9) most significant digits
	Mueller Systems 420 Solid State Register (SSR) LCD*		Red	Black	Green	Up to nine (9) most significant digits
	Neptune ProRead, E-coder, ARB-V* or ProCoder with encoder output		Black	Green	Red	Up to nine (9) most significant digits
	Neptune registers with Nicor connector		Red	Black	Green	Up to nine (9) most significant digits
	Sensus iPerl®		Red	Black	Green	Up to nine (9) most significant digits
	Kamstrup flowIQ®		Red	Black	Green	Up to nine (9) most significant digits
	Master Meter® Octave® Ultrasonic meter (encoder output)*		Red	Black	Green	Up to eight (8) most significant digits
	Hersey Translator*		Due to the customized, factory wire configurations of the Hersey Translator, the terminal posts may not match the ORION endpoint wire colors. Please contact Hersey for the terminal post wiring schematic of your encoders to determine how the posts correspond to ORION endpoint wires.			

NOTE: Competitive encoder output is determined by the encoder configuration.

*ORION Cellular endpoints are compatible with the encoders/meters noted above that have a manufacture date within 10 years of the current date as long as the encoder has three wires connected to it and is programmed into the three-wire output mode for AMR/AMI. Encoder registers with two-wire mode of operation require programming by the Utility, including registers that support auto two- or three-wire detection systems that do not automatically switch to three-wire mode of operation when a compatible endpoint is connected for ORION connectivity.

Installation Guidelines (Indoor, Outdoor, Pit)

Install the endpoint/encoder assembly according to these guidelines:

Always install endpoint antenna straight up—not on an angle or upside down. Antenna is located in the top 1/3 of the threaded tube.

- **Indoor Installation:** Mount endpoints in the floor joist on an outside wall, near a window, if possible, and away from large metal objects.
- **Outdoor Installation:** See *"64394-032 Wall Cover Install Kit" on page 15* for mounting kit information.
- **Pit Installation:**

IMPORTANT

- Mount ORION Cellular endpoints **through** a NON-METAL pit lid*—**REQUIRED**.
  *If metal lids must be used, ORION Cellular Lens endpoints may be installed **through** the lid to improve cellular signal and endpoint performance. See the ORION Cellular Lens Endpoint Installation quick start guide for more details.
- **Install at or above grade level**.

NOTE: See the installation troubleshooting document, *ORION Cellular Endpoint Installation Do's and Don'ts*, available at *www.badgermeter.com*. Endpoints not properly installed may not be covered under warranty.

Endpoint Activation

See *"Activating Endpoints" on page 12* for details of the process.

ORION MOBILE M, ME AND SE ENDPOINTS

This section discusses configuration, encoder compatibility and installation information for ORION Mobile M, ME and ORION Fixed Network (SE) endpoints.

ORION Endpoint	Serial Number Range	FCC Label Color
Mobile M	60000000…69999999	blue
ME	30000000…59999999	white
SE	30000000…59999999	white

On the ORION Mobile M endpoint, the serial number is engraved on one side of the endpoint base, and the blue FCC label is displayed on the other side (*Figure 7*).
On ORION ME and SE endpoints, the serial number is engraved along the side of the endpoint body. The white FCC label is also displayed on the endpoint body.

Mobile solutions deployed prior to February 1, 2023 include ORION ME endpoints that are migratable to fixed network. BEACON SaaS Mobile solutions deployed after February 1, 2023 include ORION ME endpoints that operate in mobile mode only.

Figure 7: ORION Mobile M endpoint (medium gray)

Figure 8: ORION ME, SE endpoint

Endpoint Configurations

The following configuration options are available.

Endpoint Configurations	Encoder Connection
Endpoint only with inline connector (Twist Tight, Nicor, 308)	Connect the endpoint to an encoder using the inline connector. See *"Inline Connectors" on page 31*.
Endpoint only with flying lead for field splice	See *Field Wiring, Encoder Connectivity and Read Resolution* below.
Endpoint/encoder assembly with inline connector	Endpoint/encoder assemblies (endpoints connected by an inline connector to a Badger Meter encoder) are shipped from the factory, ready for installation.
Prewired integral endpoint/encoder assembly	Mount the assembly on the bayonet of the meter. See *"Integral Endpoint Installation" on page 25 for details.*

Field Wiring, Encoder Connectivity and Read Resolution

ORION Mobile M, ME and SE endpoints with flying leads are shipped from the factory pre-programmed. Connect all three wires to an encoder to complete installation. The endpoint can be connected to existing wires from the encoder or directly to the encoder terminal screws, depending on the application and manufacturer. Endpoints can be connected to Badger Meter high resolution encoders and E-Series Ultrasonic meters as well as a number of competitive encoders. See the wiring chart on the next page.

NOTE: For instructions on field wiring using gel connectors, see *"Using Gel Caps to Connect an Encoder" on page 33.* Follow the manufacturer's instructions provided with the gel cap/field splice kit you are using.

ORION endpoint wires: Red = Power/Clock; Black = Ground; Green = Data

Endpoint Label	Encoder Connectivity	Encoder Wire/Termination Colors	Endpoint Wire Colors Red	Black	Green	Reading Resolution
ELCD or ENC	Badger Meter HR-E LCD or HR-E encoders, or E-Series Ultrasonic Meter with High Res output		Red	Black	Green	Up to eight (8) most significant digits
ADE or ENC	Badger Meter ADE or E-Series Ultrasonic Meter with ADE output		Red	Black	Green	Up to six (6) most significant digits
RTR	Badger Meter RTR or E-Series Ultrasonic Meter with RTR output		Red	Black	Green	Up to seven (7) most significant digits
ADE or ENC	Honeywell (Elster)/AMCo ScanCoder or InVISION*and evoQ4 meter (encoder output)*		Green	Black	Red	Up to eight (8) most significant digits
C700D	Honeywell (Elster)/AMCo C700 Digital*		Red	Black	Not used – cut green wire flush with outer sheath	Up to seven (7) most significant digits
ADE or ENC	Master Meter Octave Ultrasonic meter (encoder output)*		Red	Black	Green	Up to eight (8) most significant digits
ADE or ENC	Metron Hawkeye*		Red	Black	Green	Up to eight (8) most significant digits
ADE or ENC	Mueller Systems 420 Solid State Register (SSR) LCD*		Red	Black	Green	Up to eight (8) most significant digits
ADE or ENC	Neptune ProRead, E-coder or ARB-V*		Black	Green	Red	Up to eight (8) most significant digits
ADE or ENC	Sensus Electronic Register encoder (ECR) or ICE*		Red	Black	Green	Up to eight (8) most significant digits
ADE or ENC	Hersey Translator*		Due to the customized, factory wire configurations of the Hersey Translator, the terminal posts may not match the ORION endpoint wire colors. Please contact Hersey for the terminal post wiring schematic of your encoders to determine how the posts correspond to ORION endpoint wires.			

NOTE: Competitive encoder output is determined by the encoder configuration.

*ORION ME and SE ADE or ENC endpoints are compatible with the encoders/meters noted above with a manufacture date within 10 years of the current date as long as the encoder is programmed into the three-wire output mode for AMR/AMI and has three wires connected to it. Encoder registers with two-wire mode of operation require programming by the Utility, including registers that support auto two- or three-wire detection systems that do not automatically switch to three-wire mode of operation once a compatible endpoint is connected for ORION connectivity.

Installation Guidelines (Indoor, Outdoor, Pit)

Install the endpoint/encoder assembly according to these guidelines:

Always install endpoint antenna straight up—not on an angle or upside down. Antenna is located in the top 1/3 of the threaded tube.

- **Indoor/Outdoor Installation:** Mount outside the building, or indoors in the floor joist near an outside wall and away from large metal objects.
- **Pit Installation, ORION Mobile M, ME Endpoints**: Mount through a NON-METAL pit lid—**Recommended**.
- **Pit Installation, ORION SE Endpoints**: Mount through a NON-METAL pit lid—**REQUIRED**.

NOTE: Endpoints not properly installed may not be covered under warranty.

Endpoint Activation

See *"Activating Endpoints" on page 12* for details of the process.

ORION CLASSIC ENDPOINTS

This section discusses configuration, encoder compatibility and installation information for ORION Classic (CE) endpoints.

ORION Endpoint	Serial Number Range	FCC Label Color
CE	70000000…89999999	white

On the ORION CE endpoint, the serial number and FCC information are engraved on the top of the endpoint.

Figure 9: ORION Classic (CE) Endpoint

Endpoint Configurations

The following configuration options are available.

Endpoint Configurations	Encoder Connection
Endpoint only with inline connector (Twist Tight, Nicor, 308)	Connect the endpoint to an encoder using the inline connector. See *"Inline Connectors" on page 31*.
Endpoint only with flying lead for field splice	See *Field Wiring, Encoder Connectivity and Read Resolution*.
Endpoint/encoder assembly with inline connector	Factory prewired endpoints, connected to a Badger Meter encoder, are shipped, ready for installation. No splicing required.
Prewired integral endpoint/encoder assembly	Mount the assembly on the bayonet of the meter. See *"Integral Endpoint Installation" on page 25 for details.*

Field Wiring, Encoder Connectivity and Read Resolution

ORION CE endpoints with flying leads are shipped from the factory pre-programmed. Connect all three wires to an encoder to complete installation. The endpoint can be connected to existing wires from the encoder or directly to the encoder terminal screws, depending on the application and manufacturer. Endpoints can be connected to Badger Meter high resolution encoders and E-Series Ultrasonic meters as well as a number of competitive encoders. See the wiring chart on the next page.

NOTE: For instructions on field wiring using gel connectors, see *"Using Gel Caps to Connect an Encoder" on page 33*.

ORION endpoint wires: Red = Power/Clock; Black = Ground; Green = Data

Endpoint Label	Encoder Connectivity	Encoder Wire/Termination Colors	Endpoint Wire Colors Red	Black	Green	Reading Resolution
ADE	Badger Meter ADE, HR-E LCD or HR-E encoders, or E-Series Ultrasonic Meter with High Res or ADE output		Red	Black	Green	Up to seven (7) most significant digits
RTR	Badger Meter RTR or E-Series Ultrasonic Meter with RTR output		Red	Black	Green	Up to seven (7) most significant digits
UNIV*	Honeywell (Elster)/AMCo ScanCoder or InVISION		Green	Black	Red	Up to seven (7) most significant digits
UNIV*	Master Meter Octave Ultrasonic meter (encoder output)		Red	Black	Green	Up to seven (7) most significant digits
UNIV*	Metron Hawkeye		Red	Black	Green	Up to seven (7) most significant digits
UNIV*	Mueller Systems 420 Solid State Register (SSR) LCD		Red	Black	Green	Up to seven (7) most significant digits
ARB-V*/**	Neptune ARB-V for connectivity to ORION endpoint > serial number 80000000		Black	Green	Red	Up to seven (7) most significant digits
ARB-V*/**	Neptune ARB-V for connectivity to ORION endpoint < serial number 79999999		Red	Black	Green	Up to seven (7) most significant digits
UNIV*	Neptune ProRead or E-coder		Black	Green	Red	Up to seven (7) most significant digits
UNIV*	Sensus Electronic Register Encoder (ECR) or ICE		Red	Black	Green	Up to seven (7) most significant digits
UNIV*	Hersey Translator		Due to the customized, factory wire configurations of the Hersey Translator, the terminal posts may not match the ORION endpoint wire colors. Please contact Hersey for the terminal post wiring schematic of your encoders to determine how the posts correspond to ORION endpoint wires.			

NOTE: Competitive encoder output is determined by the encoder configuration.

*ORION Classic UNIV and ARB-V endpoints are compatible with the encoders/meters noted above with a manufacture date within 10 years of the current date as long as the encoder is programmed into the three-wire output mode for AMR/AMI and has three wires connected to it. Encoder registers that are currently in two-wire mode of operation require programming by the Utility, including registers that support auto two- or three-wire detection systems that do not automatically switch to three-wire mode of operation once a compatible endpoint is connected for ORION connectivity.

**A separate ORION CE Universal endpoint is available for connectivity to the Neptune ARB-V encoder. Make sure the ORION Classic endpoint has "ARB-V" on the harness label when wiring to an ARB-V encoder. Wiring differs depending on the serial number of the ORION endpoint you are connecting to the ARB-V encoder, so make sure to verify wiring is correct per the above chart.

Installation Guidelines (Indoor, Outdoor, Pit)

Install the endpoint/encoder assembly according to these guidelines:

Always install endpoint antenna straight up—not on an angle or upside down. Antenna is located in the top 1/3 of the threaded tube.

- **Indoor/Outdoor Installation**: Mount outside the building, or indoors in the floor joist, near an outside wall, and away from large metal objects.
- **Pit Installation**: Mount through a NON-METAL pit lid—**Recommended**.

NOTE: Endpoints not properly installed may not be covered under warranty.

Endpoint Activation

See *"Activating Endpoints" on page 12* for details of the process.

ACTIVATING ENDPOINTS

Activation is dependent on whether the endpoint is in "Pause" (soft sleep) or "Stop" (hard sleep) radio mode. The Product Configuration Utility software can be used to identify the endpoint radio mode.

Smart Activation for Endpoints in Pause Mode

ORION endpoints* offer a Smart Activation feature which utilizes consumption to automatically start an endpoint in Pause mode. After installation, the endpoint radio "wakes up" and begins broadcasting data when the encoder to which it is connected detects enough water usage from the register. No field programming or special tools are required, but the amount of water consumption depends on the encoder output and meter size so activation times will vary. Infrared (IR) activation tools are available for use if immediate activation is desired. See the *Product Configuration Utility for ORION Endpoints software manual* (UTL-PM-04172-EN), *IR Communication Device quick reference guide* (UTL-QG-03116-EN), and *IR Communication Device Updating Firmware* application data sheet (UTL-AS-03461-EN) available at *www.badgermeter.com*.

NOTE: Using the IR Alignment Tool (68779-001) is recommended for IR activation.

* ORION Cellular Lens endpoints do not have the Smart Activation feature. IR tools must be used to activate and verify proper installation.

Endpoint/Encoder Assemblies

An initial encoder read is stored by the endpoint at the time the encoder and endpoint are factory connected and the endpoint is placed in Pause mode. While in Pause mode, the endpoint monitors the encoder for consumption, checking once every fifteen minutes. When the endpoint/encoder assembly is installed and sufficient water is running through the meter, the endpoint automatically "wakes up" and transitions to its operational mode when the required consumption is registered (see table below).

Encoder Output	Dial Change Required to Activate
7-dial	Any 1 unit change in the least significant digit
8-dial	Any 5 unit change in the least significant digit
9-dial	Any 5 unit change in the least significant digit

Table 1: Activation consumption thresholds

Endpoint Only

Like endpoint/encoder assemblies, ORION endpoint only configurations can be shipped in Pause mode. The initial encoder read will be established the first time an endpoint is field connected to an encoder.

NOTE: It may take up to fifteen (15) minutes for an endpoint to recognize the initial encoder read. To expedite this process, Badger Meter recommends connecting an ORION endpoint to an encoder in advance of field installation so the baseline encoder read can be captured before installing the endpoint.

After the initial encoder read is stored, the endpoint monitors the encoder for consumption, checking for a change in the encoder read once every fifteen minutes thereafter. The endpoint automatically "wakes up" and transitions to its operational mode once the required amount of consumption is registered (see *Table 1*).

Activation for Endpoints in Stop Mode

Endpoints in Stop mode must be manually activated via IR communication using either the Badger Meter IR Communication Device (68891-001) or the Product Configuration Utility software. The software can also be used to identify the endpoint radio mode. For more information, see the *Product Configuration Utility for ORION Endpoints software manual* (UTL-PM-04172-EN), *IR Communication Device quick reference guide* (UTL-QG-03116-EN), and *IR Communication Device Updating Firmware* application data sheet (UTL-AS-03461-EN) available at *www.badgermeter.com*.

Confirming Installation - ORION Cellular C, HLD, HLFX, HLG, CS, LTE-M, LTE-MS, HLA, HLB, HLC, LTE

Before leaving the installation site, the installer can confirm endpoints are active and communicating.

1. BEACON® Software as a Service (SaaS) users can check ORION Cellular endpoint activation status with the ***ORION Endpoint Status*** tool. Endpoints do not need to be provisioned in BEACON SaaS to display using the tool. See *"Endpoint Status Tool for ORION Cellular Endpoints" on page 29* for more information.
2. The IR Communication Device (68891-001) can be used to confirm endpoint activation and verify the encoder connection. Instructions are included with the device.

Active endpoints automatically transition to the appropriate network.

IMPORTANT

For best results at time of installation, the IR Communication Device firmware should be updated prior to installing any new cellular endpoint type. Go to ***Utility Settings****>****Downloads*** *on the BEACON website to find the latest firmware and instructions on how to update firmware on the device.*

Confirming Installation - ORION Mobile M, ME, SE, CE

Before leaving the installation site, the installer can use an ORION handheld or ORION Mobile Reading system to confirm the endpoint is broadcasting RF data for reading. See the appropriate handheld or ORION Mobile Reading system user manuals, available at *www.badgermeter.com,* for more information.

Active Endpoints

ORION Cellular C, HLD, HLFX, HLG, CS, LTE-M, LTE-MS, HLA, HLB, HLC, LTE endpoints	When the endpoint transitions to *Active* mode, it begins the network registration process. BEACON assigns a daily call-in time to the endpoint as part of this process. An active operating ORION Cellular endpoint obtains a current encoder read every 15 minutes.
ORION ME endpoints used in a mobile solution deployed prior to February 1, 2023 and ORION SE	When the endpoint transitions to *On-Mobile* mode, it begins broadcasting its message for fixed network or mobile data collection. An active operating ORION endpoint obtains a current encoder read once an hour.
ORION ME endpoints used in a BEACON SaaS Mobile solution deployed on or after February 1, 2023, ORION Mobile M and CE	Once activated, the endpoint begins transmitting. An active operating ORION ME, Mobile M and CE endpoint obtains a current encoder read once an hour.

CHANGING REGISTRATION FOR AN EXISTING ENDPOINT ASSEMBLY

ORION Cellular C, HLD, HLFX, HLG, CS, LTE-M, LTE-MS, HLA, HLB, HLC, LTE

If you change the encoder connected to an ORION Cellular endpoint, the endpoint will recognize the new encoder, once connected, and report previous and current interval data.

ORION Mobile M, ME, SE, CE

If you change the encoder connected to an ORION Mobile M, ME, SE or CE endpoint that has previously logged historical profile data, best practice recommends following this process:

1. Extract and save the historical profile data from the endpoint. See the *Product Configuration Utility for ORION Endpoints software manual*, available at *www.badgermeter.com*, if you need help.
2. Clear the profile data from the endpoint.
3. Connect the new encoder. Follow applicable installation instructions in this manual.
   The endpoint will recognize the new encoder, once connected, and record interval data.

ENDPOINT INSTALLATION KITS

Type	For Use With	Description	Kit Part Number
REMOTE	All ORION endpoints	*64394-032 Wall Cover Install Kit*	64394-032
REMOTE	64394-032	*67625-001 IR Holder for Wall Cover Install Kit*	67625-001
REMOTE	ORION Cellular C, HLD, HLG, CS, LTE-M, LTE-MS, HLA, HLB, HLC, LTE, and ORION Mobile M	*64394-031 Wall Bracket Install Kit - ORION Cellular LTE*	64394-031
REMOTE	ORION ME, SE, CE	*69406-001 Mounting Bracket Install Kit for ORION Endpoint and E-Series Ultrasonic Meter*	69406-001
REMOTE or PIT	ORION ME, SE, CE	*64394-029 Wall Bracket Install Kit - ORION*	64394-029
REMOTE	All ORION endpoints	*64394-008 C-Clamp Wall Bracket Install Kit - ORION*	64394-008
REMOTE or PIT	All ORION endpoints	*64394-003 Pipe Install Kit-ORION*	64394-003
REMOTE	All ORION endpoints	*64394-023 Commercial Meter Mounting Bracket Install Kit-ORION*	64394-023
PIT	All ORION endpoints	*64394-030 Thru-the-Lid Install Kit*	64394-030
PIT	ORION ME, SE, CE	*64394-009 Integrated Pit Lid Hanger Install Kit*	64394-009

Instructions for using each installation kit follow in this section.

Refer to the *ORION Water Endpoints Installation Kit Ordering Guide* and the *ORION Water Endpoint Parts List* for individual endpoint kit components. Both documents are available at *www.badgermeter.com*.

64394-032 WALL COVER INSTALL KIT

Wall Cover Install Kit (64394-032) is recommended for proper mounting of an endpoint for indoor and outdoor remote applications, and is designed to provide an environmentally protected area for gel splice connections (if needed). Outside dimensions are shown in *Figure 11*.

For use with: All ORION endpoints

Figure 10: 64394-032 wall cover enclosure

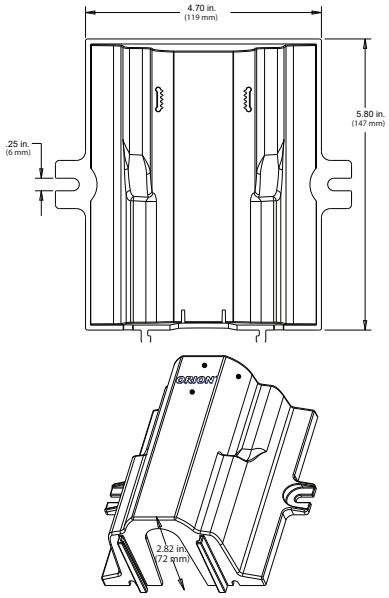

Figure 11: 64394-032 Outside dimensions

To install an ORION endpoint, follow these steps.

1. Choose an appropriate installation location within the limits of the endpoint cable/connector harness.
2. Verify the proper orientation (*Figure 12*). The bottom of the enclosure has an opening for IR programming. The opening gives access to the endpoint IR LED port (*Figure 15* and *Figure 16*) without having to disassemble the unit.
3. Place the endpoint into the wall cover enclosure, antenna (threaded portion) up.

   Cellular endpoints: *Figure 12* shows the correct endpoint placement.

   All other ORION endpoints: Make sure the flat side of the endpoint faces in and fits up against the inside wall of the enclosure.

   NOTE: If double-sided tape is included in the kit, you can use the tape to temporarily secure the endpoint inside the enclosure before mounting.

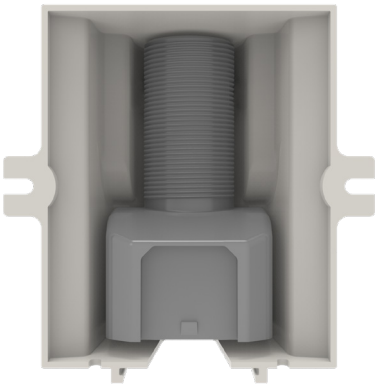

Figure 12: ORION Cellular LTE endpoint orientation

4. Position the endpoint cable.
   - Route the endpoint cable through the cutout on the bottom of the wall cover.

     NOTE: If you are drilling a hole through the wall behind the enclosure for the endpoint cable, the cable does not need to route through the cutout at the bottom.

- If the endpoint has an inline connector, place the connector *inside* with the endpoint and route the connector cable through the cutout on the bottom.

  NOTE: If used, place gel splice connections inside the enclosure.

  NOTE: See *"Outdoor Installation for Endpoint with Inline Connector" on page 17* for additional information about installing the endpoint outdoors with the wall cover enclosure.

5. Make sure the wall cover is properly positioned, with the endpoint antenna straight up and the endpoint IR LED port visible through the bottom opening.
6. Secure the wall cover using customer-supplied screws.
   Installation is complete.

Figure 13: 64394-032 installation complete

67625-001 IR Holder for Wall Cover Install Kit

IR Holder for Wall Cover Install Kit (67625-001) is an optional part which can be ordered for use with the Wall Cover install kit (**64394-032**). The IR holder bracket fits on the wall cover adapter rails to hold an IR programming head in correct alignment with the endpoint LED port.

1. Place the optical head of an IR programming cable into the holder. The nubs on the optical head fit into the cutouts on the holder.

(67625-001) IR holder bracket

Optical head of the IR programming cable

Optical head in the bracket

Figure 14: IR holder and programming cable optical head

2. Slide the bracket into the adapter rails at the bottom of the wall cover enclosure (64394-032) so the IR optical head is aligned with the endpoint LED port. See *Figure 15* and *Figure 16*.
3. Connect the IR programming cable to a Badger Meter mobile reading device to perform IR functions. Refer to the *Product Configuration Utility for ORION Endpoints software manual*, available at *www.badgermeter.com*, for IR programming instructions.

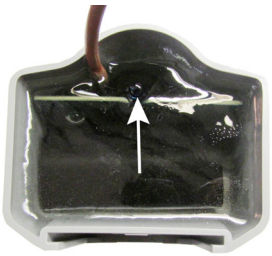

Figure 15: IR LED port ORION Cellular LTE endpoint (bottom up view)

Figure 16: IR LED port ORION ME endpoint (bottom up view)

Outdoor Installation for Endpoint with Inline Connector

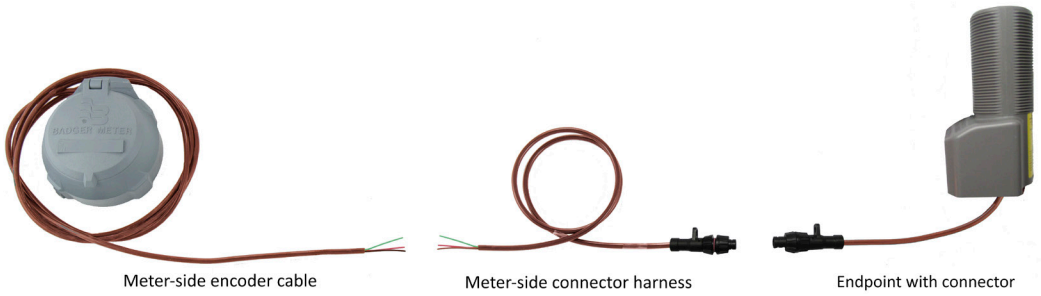

Figure 17: Outdoor endpoint installation

Meter-side connector harnesses are available with Twist Tight and Nicor connectors in the following lengths.

Harness with Twist Tight Connector			**Harness with Nicor Connector**	
Part Number	*Harness Lead Length*		*Part Number*	*Harness Lead Length*
68307-006	10 ft harness		66488-006	10 ft harness
68307-003	25 ft harness		66488-003	25 ft harness

Follow these recommended installation steps for an outdoor endpoint installation and refer to the image in *Figure 17*.

NOTE: The Twist Tight connector is pictured above. The installation steps also apply to endpoints with Nicor and 308 connectors as well. See *"Inline Connectors" on page 31* for more information.

1. Choose an appropriate outdoor location, within the limits of the connector harness, and mount the endpoint.

   NOTE: If using a wall cover enclosure, see *"64394-032 Wall Cover Install Kit" on page 15* for additional information on mounting.

2. Join the endpoint connector with the connector mate of the encoder cable.
   If you are using a wall cover enclosure, place the inline connector inside the enclosure.
3. Drill a small hole in the wall of the house/structure to accommodate the endpoint/encoder cable.
4. Pass the cable end with the flying leads through the wall of the house.
5. Inside the house, connect the encoder wires. Depending on the encoder connection, use a field splice kit or connect the wires directly to the encoder terminal screws. See the appropriate wiring charts in this manual if you need help.

NOTE: Refer to the *Field Splice Kit Application Data Sheet*, available at *www.badgermeter.com*, for field splice instructions.

When the meter, encoder and endpoint are installed and connected, installation is complete.

64394-031 WALL BRACKET INSTALL KIT - ORION CELLULAR LTE

Wall Bracket Kit 64394-031 (*Figure 18*) is available for mounting ORION Cellular endpoints.

For use with: ORION Cellular C, HLD, HLG, CS, LTE-M, LTE-MS, HLA, HLB, HLC and LTE endpoints

Figure 18: 64394-031

The bracket clips into the slot on the endpoint and can be used to attach the endpoint to a wall. A screwdriver and two (2) customer-supplied screws are required. Drill pilot holes for the screws (**recommended**) before attaching the wall bracket and endpoint.

The bracket can also be used to mount the endpoint to a pole with cable ties (customer supplied) threaded through the bracket openings.

69406-001 MOUNTING BRACKET INSTALL KIT FOR ORION ENDPOINT AND E-SERIES ULTRASONIC METER

Mounting Bracket Install Kit (69406-001) is designed to securely install an ORION endpoint to an E-Series Ultrasonic meter for non-submerged indoor and outdoor remote applications.

For use with: ORION ME, SE, CE endpoints

Figure 19: Mounting bracket with locking clip in place

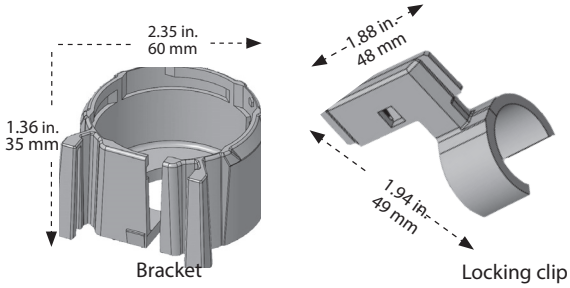

Figure 20: Mounting bracket and locking clip dimensions

To connect the bracket to the meter and endpoint, follow these steps.

NOTE: The kit components are the mounting bracket (**68789-001**) and the locking clip (**68790-001**). Keep the two pieces separate when you start.

1. Feed the endpoint wiring cable through the mounting bracket central opening.

   You will see a small triangle on the underside of the bracket (*Figure 21*) and at the bottom of the endpoint.

   Align the triangles, push the bracket and endpoint together and twist the endpoint clockwise until the endpoint clicks into place.

Figure 21: Triangle on underside of bracket

2. Align the tabs of the mounting bracket to the tabs on the side of the E-Series register (*Figure 22*). Then slide the mounting bracket/endpoint down into place on the register.
3. Once the endpoint is mounted on the E-Series register, insert the locking clip underneath the mounting bracket in the space between the mounting bracket and the register. The flat side of the locking clip should face the mounting bracket and fit in the mounting bracket grooves. It will click into place and lock.

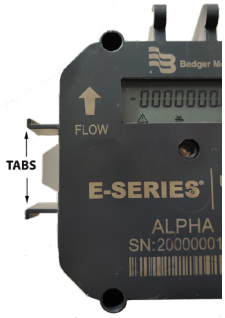

Figure 22: E-Series Ultrasonic meter register tabs

   NOTE: The endpoint is secure and cannot be removed until you remove the locking clip.

4. Make sure the endpoint antenna is upright in its final position.

Figure 23: ORION endpoint mounted on E-Series meter register

64394-029 WALL BRACKET INSTALL KIT

Wall Bracket Install Kit (64394-029) can be used to securely install an ORION endpoint. For non-submerged indoor and outdoor applications, the bracket can be used in any indoor or outdoor *nonmetallic* joist, wall or pit application.

For use with: ORION ME, SE, CE endpoints

You will need the following items.

- Wall Bracket install kit
- Two customer-supplied screws
- Screwdriver and drill

To connect the bracket to the endpoint and mount, follow these steps.

1. Using the screw holes of the wall bracket as a guide, drill two pilot holes on the joist or wall where the bracket is to be installed.

Figure 24: Endpoint wall bracket

Connect the endpoint

2. Carefully slide the encoder cable harness through the slit in the bracket with the screw holes at the bottom (*Figure 25*).
3. Locate the small triangle and hole underneath the bracket (*Figure 26*). The triangle is used to align the bracket with the endpoint.

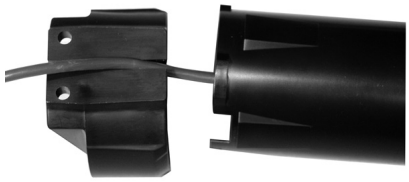

Figure 25: Threading cable harness

4. Locate the small raised triangle at the bottom of the ORION endpoint housing (*Figure 27*).

Figure 26: Aligning triangle

Figure 27: Housing triangle

5. Align the endpoint and bracket triangles. Then push the bracket and endpoint together. This should be easy.
6. With one hand holding the bracket, use the other hand to twist the endpoint approximately 1/4 turn clockwise until you feel it lock into place (*Figure 29*).

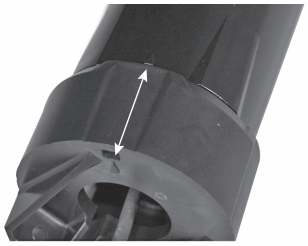

Figure 28: Align triangles and push bracket onto endpoint

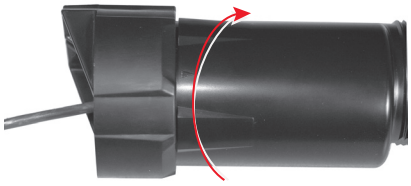

Figure 29: Twist endpoint to lock

Mount the endpoint assembly

7. Make sure the endpoint antenna is upright (*Figure 30*) when you place it into its final position.
8. Using two customer-supplied screws, secure the bracket assembly using the pilot holes you drilled in Step 1.

   Installation is complete.

Figure 30: Endpoint positioning

64394-008 C-CLAMP WALL BRACKET INSTALL KIT

C-Clamp Wall Bracket Install Kit (64394-008) can be used when mounting an endpoint to a wall.

For use with: All ORION endpoints. For ORION Cellular endpoints, the kit can be used for indoor and remote installations, but should NOT be used in a vault.

To mount an ORION endpoint using this kit, follow these steps and refer to *Figure 31*.

1. Choose an appropriate location on the wall for the endpoint. Using an appropriate size fastener and washer (customer-supplied), mount the C-clamp to the wall through the opening at the back. When mounting in a vault, install the C-clamp close to the top to prevent damage when accessing the meter is required.

   NOTE: ORION Cellular endpoints should NOT be mounted in a vault.
2. Place the neoprene spacer from the installation kit around the endpoint, approximately 1/2 inch (13 mm) from the top of the endpoint. Hold the neoprene spacer in place with your fingers.
3. Thread the lock nut onto the endpoint until it makes contact with the neoprene spacer.
4. Insert the endpoint into the C-clamp, making sure the neoprene spacer stays inside the C-clamp.
5. Close the C-clamp and lock it in place so that it closes over the neoprene spacer and securely holds the endpoint as shown in *Figure 31*.

   Installation is complete.

NOTE: ORION radio endpoints perform best with a clear line of sight. Performance varies with installation.

C-Clamp

C-Clamp around endpoint

Figure 31: C-Clamp and placement

64394-003 PIPE INSTALL KIT

Pipe Install Kit (64394-003) with mounting support bracket (*Figure 32*) is designed for pipe installations on a 3/8, 5/8 and 1/2 inch rebar or 1/2 inch schedule 40 PVC pipe.

For use with: All ORION endpoints. For ORION Cellular endpoints, the kit can be used for indoor and remote installations, but should NOT be used under a pit lid.

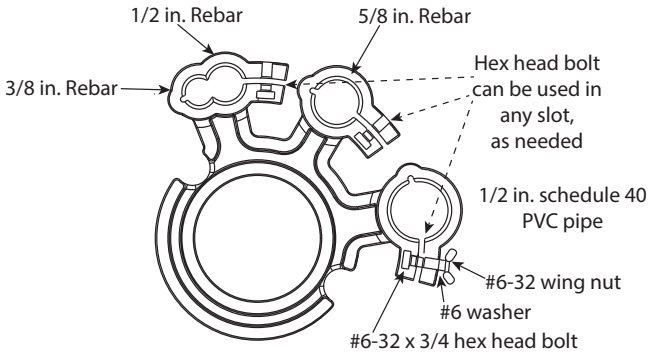

Figure 32: Support bracket (knuckles)

To install an ORION endpoint using the mounting support bracket, follow these steps.

1. Drive rebar or stake into the ground, or use a free-standing pipe or rebar.

   ⚠CAUTION

   DRIVE REBAR OR STAKE INTO THE GROUND PRIOR TO ATTACHING THE ENDPOINT TO AVOID DAMAGE.

2. Slide the mounting support bracket on the rebar/stake/pipe and secure using the enclosed washer, wing nut and hex head bolt provided with the bracket. The hex head bolt fits in any slot.

   NOTE: The bracket can be installed with either side up, but installing with the smooth side up is recommended if installed outdoors to avoid potential rainwater build up.

3. Insert the threaded end of the endpoint up through the bottom of the bracket opening. Then thread the lock nut onto the endpoint and tighten the lock nut to secure the bracket (*Figure 33*).
   For pit installations, mount the endpoint a maximum of 1…2 inches (25…51 mm) below the pit lid. (NOT for ORION Cellular endpoints!)

4. Install the bracket anywhere along the length of the endpoint threaded end, as long as it is at least 0.5 in. (13 mm) below the top where the antenna is located. Installation is complete.

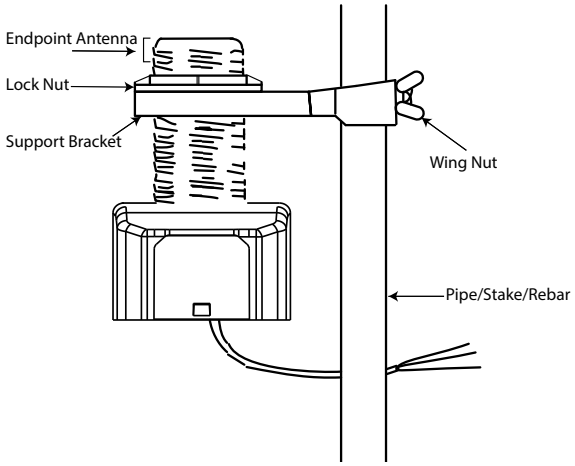

Figure 33: Pipe installation kit with ORION Cellular endpoints

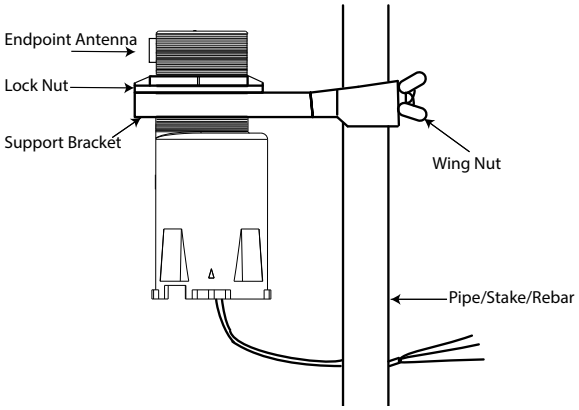

Figure 34: Pipe installation kit with ORION ME, SE, CE endpoints

64394-023 COMMERCIAL METER MOUNTING BRACKET INSTALL KIT

Commercial Meter Mounting Bracket Install Kit (64394-023) is designed for use with most Badger Meter Turbo, Compound Series and Fire Service Disc bypass meter lines. Use the kit to securely mount an ORION endpoint to a meter.

For use with: All ORION endpoints

You will need a torque wrench set for installation. The kit components are:

- Stainless steel mounting bracket 66360-001
- Lock nut 62825-001

To install the bracket, follow these steps:

Figure 35: Stainless steel mounting bracket

Figure 36: Lock nut with gussets

1. Verify that the water is turned off.
2. Slip the mounting bracket over the top of the ORION endpoint, as shown.
3. Screw the lock nut from the kit onto the threaded section of the endpoint. Hand tighten the lock nut to secure the bracket.
4. At the meter, unscrew the head assembly bolt at the location where you plan to mount the endpoint.
5. Position the bracket, reinsert the bolt and hand tighten it.

   NOTE: For visual clarity, the photo in *Figure 39* shows the bracket without the endpoint attached.

Figure 37: Mounting bracket over endpoint

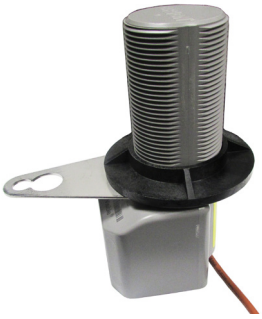

Figure 38: Tighten lock nut

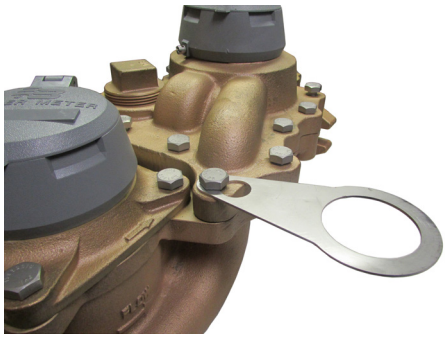

Figure 39: Bracket attached with bolt

6. Position the bracket so the endpoint is as far from the meter as possible to provide adequate space for the endpoint signal to propagate (*Figure 40*).

IMPORTANT

If two ORION endpoints are required for a fire series assembly or a compound meter application, mount the endpoints on OPPOSITE sides of the meter head assembly.

7. With the torque wrench, tighten the bolt as indicated in the chart that follows.

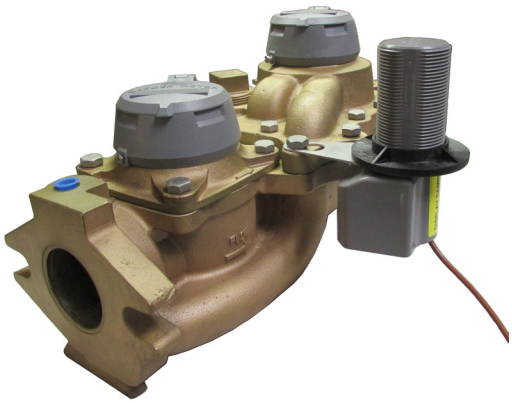

Figure 40: Endpoint connected to meter with bracket

Meter	Ft-lb		Meter	Ft-lb
2-inch Turbo Series Meter	10.9		2-inch Compound Series Meter	16.7
3-inch Turbo Series Meter	37.5		3-inch Compound Series Meter	33.3
4-inch Turbo Series Meter	37.5		4-inch Compound Series Meter	33.3
6-inch Turbo Series Meter	37.5		6-inch Compound Series Meter	33.3
			Heavy Duty Bypass M70	21.0
			Heavy Duty Bypass M170	50.0

Installation is complete. Turn the water back on.

64394-030 THRU-THE-LID INSTALL KIT

The ADA-compliant **Thru-the-Lid Install Kit (64394-030)** is designed for use with a NON-METAL PIT LID, 2 inches (51 mm) maximum thickness, with a standard hole diameter of 1-7/8 inches (48 mm).

For use with: All ORION endpoints

To install an endpoint through a non-metal pit lid, follow these steps and refer to *Figure 41*.

1. Screw the lock nut (large diameter side up) onto the endpoint tube threads.
2. Insert the endpoint tube through the bottom of the pit lid.
3. Screw the top nut onto the endpoint tube threads.
4. Tighten the lock nut and top nut to make sure the endpoint is secure.

   Installation is complete.

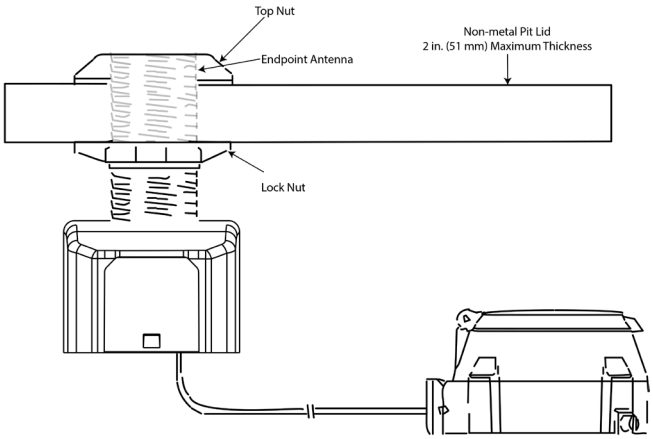

Figure 41: ORION endpoint thru non-metal pit lid

NOTE: When installing an endpoint through a thick lid, you can use a **Pit Tube Extender (67025-001)**. The Extender requires a 2 inch (51 mm) diameter hole. It screws onto the threaded portion of the endpoint. Radio frequency (RF) performance may be reduced when using the Pit Tube Extender.

Do not use Pit Tube Extender with ORION Cellular endpoints.

Figure 42: Endpoint pit tube extender – NOT for ORION Cellular endpoints

64394-009 INTEGRATED PIT LID HANGER INSTALL KIT

Integrated Pit Lid Hanger Install Kit (64394-009) is designed for ORION endpoints installed below composite and plastic lids that have an integrated AMR/AMI endpoint hanger.

For use with: ORION ME, SE, CE endpoints

To install an ORION endpoint with this kit, follow these steps and refer to *Figure 43*.

1. Thread the lock nut onto the top of the ORION endpoint as shown.
2. Slide the endpoint into the lid bracket.
3. Tighten the lock nut so that the endpoint is held firmly in place.

   Installation is complete.

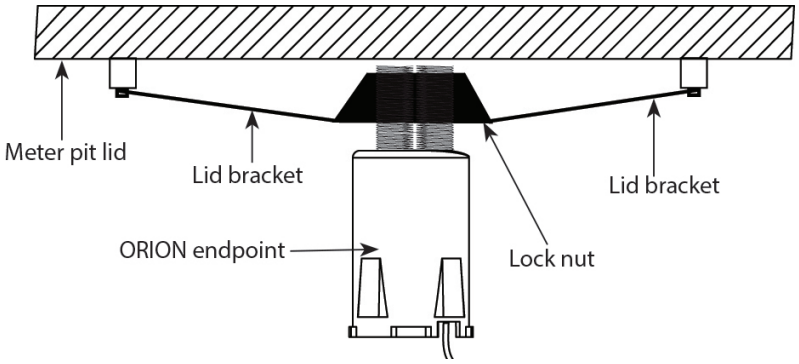

Figure 43: Integrated pit lid hanger installation

INTEGRAL ENDPOINT INSTALLATION

ORION ME, SE and CE endpoints are available in an integral configuration in which the endpoint and encoder are connected in one assembly. There are two types of integral configurations. This section includes instructions for mounting an integral endpoint on a meter and also provides instructions for disassembling both types of integrals.

Mounting an Integral Endpoint on the Meter

An integral endpoint can be installed on any Badger Meter Disc, Turbo, or Compound Series meter. Both integral configuration styles mount to the meter the same way, by placing the assembly onto the bayonet of the meter and rotating it into its locking position. See *Figure 44*.

1. Loosen the security screw on the endpoint encoder assembly.
2. Mount the assembly housing on the meter bayonet.
3. Turn the assembly clockwise 1/4 turn to lock the assembly into place on the meter.
4. After the assembly is mounted on the meter, tighten the security screw to secure the assembly to the register.

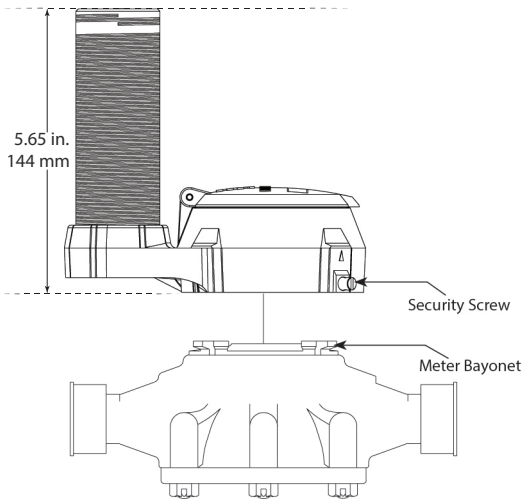

Figure 44: Integral assembly on meter

HR-E LCD Encoder Integral Configuration

Figure 45: HR-E LCD Integral

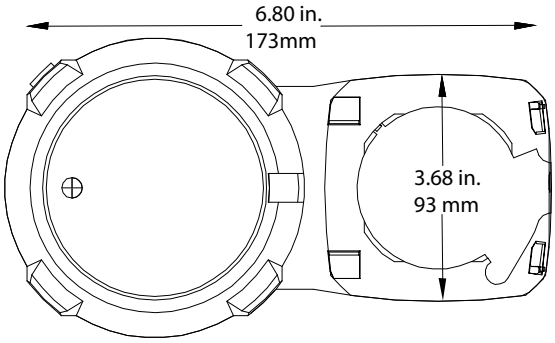

Figure 46: HR-E LCD Integral base dimensions

Configuration

The ORION HR-E LCD Integral Assembly is shown in *Figure 45*. In an HR-E LCD integral assembly, the endpoint is factory-wired to the encoder and both are mounted to the shroud bracket. Endpoints are available with a 3-foot or 10-foot wire that is wrapped around the body of the endpoint. The endpoint wire is contained under a removable cover. With this option, the endpoint can be removed from the housing, if necessary, and mounted away from the encoder. The endpoint can also be returned to the housing assembly without damage.

Removing the Endpoint from the Assembly Housing

NOTE: The endpoint cover connects to the base with three tabs: one in the back and two in the front (closest to the encoder.)

1. Remove the integral assembly from the meter.
   - Remove the security screw at the base of the assembly. Keep the screw for remounting the encoder assembly.
   - Turn the assembly (as one piece) 1/4 turn, counter-clockwise and lift the assembly off the meter.
2. With the endpoint side of the assembly facing toward you, grasp the bottom of the cover with one hand on either side of the endpoint cover base.
3. With your thumbs, push the cover at the center of the base to release the back tab (*Figure 47*). Then lift up to release the front tabs and remove the cover from the base.

Figure 47: Push at center of endpoint base to release the cover

Figure 48: Cover tabs released , endpoint wire exposed

4. Twist the endpoint to release it from the housing and uncoil the wire.
5. Mount the endpoint according to recommended installation guidelines within the limits of the endpoint wire.

NOTE: The encoder cannot be removed from the assembly housing.

6. Remount the encoder (in the assembly housing) onto the meter bayonet.
   - Turn the assembly clockwise 1/4 turn so it locks in place.
   - Replace and tighten the security screw.

Reattaching the Endpoint

To reattach the endpoint to the assembly housing, follow these steps.

1. Wrap the wire around the endpoint. Make sure the wire is wrapped tightly and neatly around the endpoint or the cover will not fit.
2. Insert the endpoint base into the shroud bracket.
   Adjust the endpoint so the tabs on the endpoint base align with the openings on the bracket, and the wire at the endpoint base fits into the opening at the back of the bracket. See *Figure 49*.
3. When the endpoint is correctly inserted into the bracket opening, turn the endpoint clockwise to make sure it is secure.
4. Place the cover over the endpoint, with the single tab at the back.
5. When the cover is almost completely on, align the two front tabs with the openings on the shroud bracket (closest to the encoder) and then push down until all three tabs click into place.

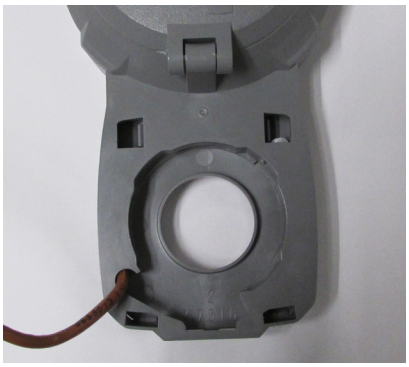

Figure 49: Integral bracket without endpoint

HR-E Encoder Integral Configuration

Figure 50: HR-E Integral assembly with additional wire

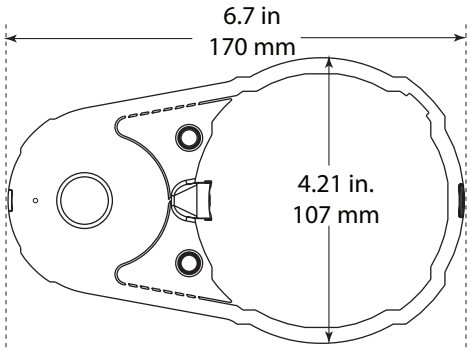

Figure 51: HR-E Integral base dimensions

Configuration

The ORION HR-E Integral Assembly is shown in *Figure 50*. The endpoint has a 3-foot length of wire stored inside the bottom of the assembly housing. The endpoint can be removed from the housing, if necessary, and mounted away from the encoder.

NOTE: Once removed, the endpoint CANNOT be reassembled into an integral configuration.

Removing the Endpoint from the Assembly Housing

IMPORTANT

Removing the endpoint from the assembly housing can only be done once with this integral configuration.

⚠CAUTION

PRIOR TO DISASSEMBLING AN INTEGRAL ENDPOINT, VERIFY THAT THE ENDPOINT HAS THREE FEET OF WIRE PACKAGED WITH THE ASSEMBLY. CHECK THE SERIAL NUMBER LABEL ON THE SIDE OF THE INTEGRAL BRACKET TO MAKE SURE IT INDICATES "3 FT WIRE." DO NOT CONTINUE WITH THE STEPS LISTED BELOW IF YOUR INTEGRAL ENDPOINT DOES NOT HAVE THIS DESCRIPTION ON THE SERIAL NUMBER LABEL, AS ENDPOINT DAMAGE WILL OCCUR.

1. Remove the assembly from the meter.
   - Remove the security screw at the base of the assembly. Keep the screw for remounting the encoder assembly.
   - Turn the assembly (as one piece) 1/4 turn, counter-clockwise.
   - Lift the assembly off the meter.

Figure 52: Remove assembly from meter

2. Remove the endpoint wire under the breakaway plate.
   - Turn the endpoint/encoder assembly over.
   - Grasp the pull tab located to the right of the encoder seal screw with pliers (*Figure 53*). Then pull and remove the bottom breakaway plate from the housing to expose the wire. The plate is scored to facilitate removal.
   - With your fingers, remove the three feet of endpoint wire from the housing.

     NOTE: The wire is attached to the endpoint.

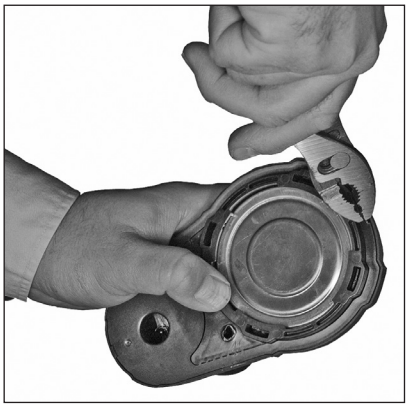

Figure 53: Pull tab to remove the breakaway plate

3. Rotate the endpoint counter-clockwise 1/4 turn and pull the endpoint and endpoint wire out from the assembly base.

Figure 54: Rotate endpoint clockwise

Figure 55: Pull endpoint away from base

4. Mount the endpoint according to recommended installation guidelines within the limits of the endpoint wire.

   NOTE: The encoder cannot be removed from the assembly housing.

5. Remount the encoder (in the assembly housing) onto the meter bayonet.
   - Turn the assembly clockwise 1/4 turn so it locks in place.
   - Replace and tighten the security screw.

ENDPOINT STATUS TOOL FOR ORION CELLULAR ENDPOINTS

BEACON® users can check the activation status of ORION Cellular endpoints with the ORION Endpoint Status tool. Several minutes after installation, the tool displays ORION Cellular endpoints assigned to you. Endpoints do not need to be provisioned in BEACON to display.

The browser-based tool can be viewed on a computer or mobile device. An Internet connection is required. Follow these steps to use the ORION Endpoint Status tool.

1. Go to *https://orionstatus.beaconama.net*.
2. Sign in with your BEACON email address and password (*Figure 56*).
   Result: The ORION Endpoint Status screen (Figure 57) opens showing the list of activated Cellular endpoints.

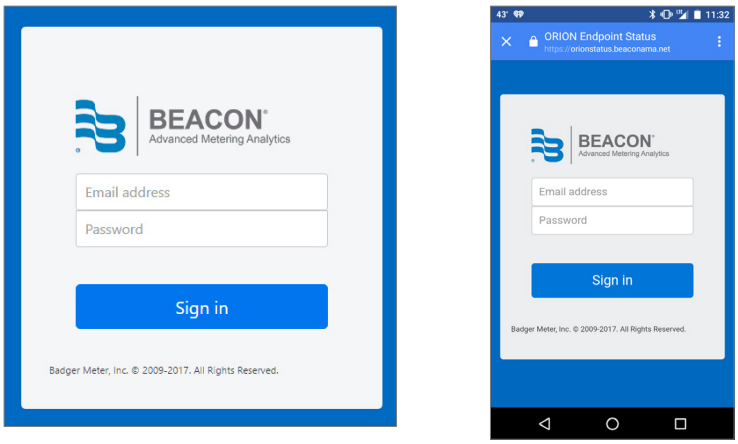

Figure 56: Tool sign in screen - computer and mobile

NOTE: It can take several minutes for a newly installed endpoint to communicate with the cellular network and display on the ORION Endpoint Status screen.

3. View the endpoint list.
   The list displays endpoint serial number, activation time, and activation signal strength. The current endpoint and meter status are also shown. Endpoints are listed according to their activation time, with the most recent endpoint activation times listed first (top of list).

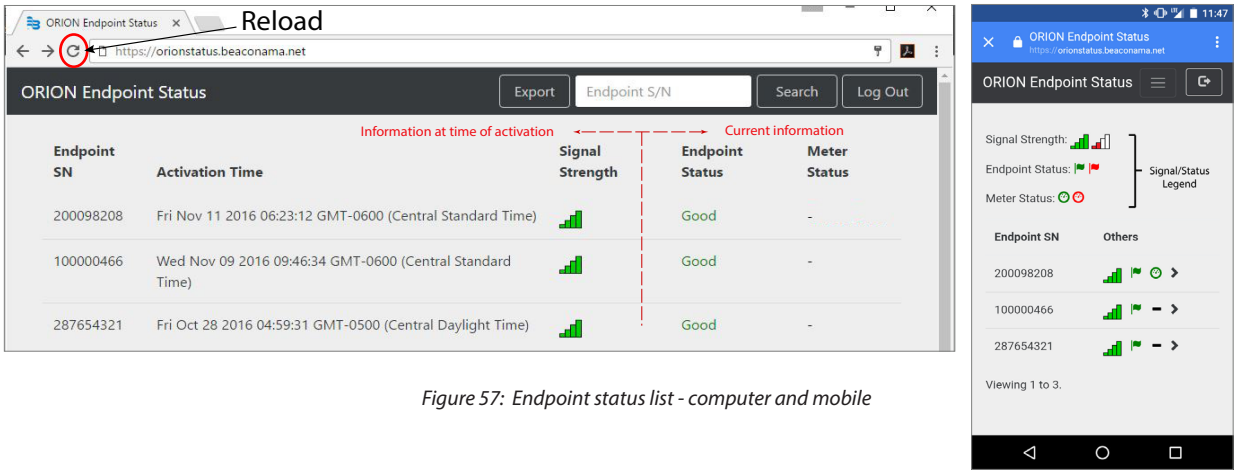

Figure 57: Endpoint status list - computer and mobile

   You can also **Export** endpoints into a program such as Excel®, or **Search** to find a specific endpoint.

4. To see any new endpoints that have been added since logging in, reload/refresh the browser window. On a computer, use the reload button at the top left of the screen. On a mobile device, swipe down the screen to refresh.

5. Select an endpoint in the list to see the endpoint raw read. A window opens, like the examples shown in *Figure 58*.

   NOTE: Information in the first three fields is captured at the time of activation. Information in the next three fields is current information.

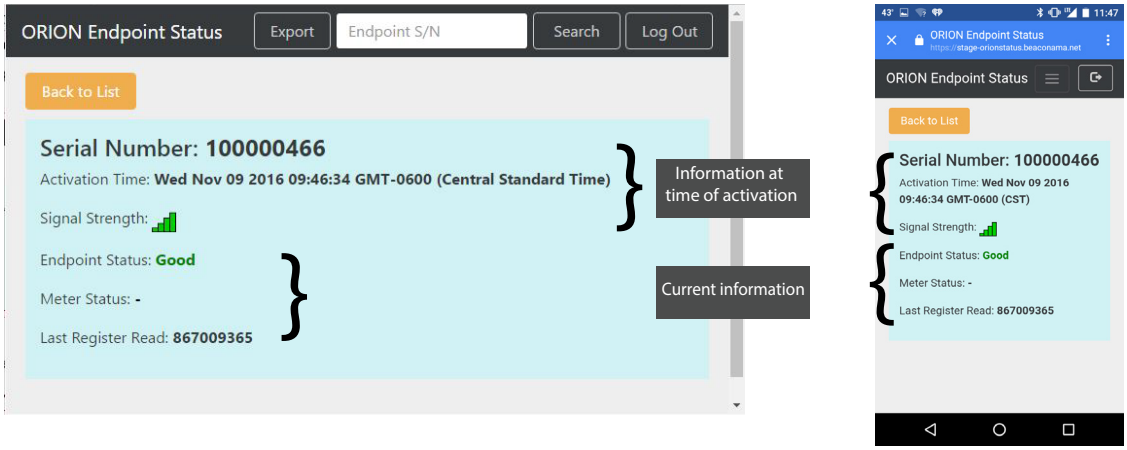

Figure 58: Status detail screen - computer and mobile

The *Endpoint Status* field displays one of the following:

Endpoint Status	Response
Good	No response required.
Endpoint Tamper or Encoder Error	Incomplete information. This message updates at the next scheduled communication.
Endpoint Tamper	Endpoint* requires attention.
Encoder Error	Encoder* requires attention.

*For additional endpoint information, see the *Product Configuration Utility for ORION Endpoints* software manual. For additional encoder information, see the appropriate encoder user manual. All documents are available at *www.badgermeter.com*.

The *Meter Status* field displays one of the following:

NOTE: *Meter Status* only displays for E-Series Ultrasonic meters. For other meters, the field will have a dash mark (–).

Meter Status	Response
Good	No response required.
Sensor Error	Meter* requires attention.

*For additional information, see the appropriate E-Series Ultrasonic Meter User Manual, available at *www.badgermeter.com*.

6. Tap/click **Back to List** to return to the previous screen.

7. When finished using the tool, tap the **Log Out** button or on a mobile device.

INLINE CONNECTORS

Inline connectors are used to allow AMA/AMR/AMI device connectivity without the need for a field splice kit. There are three available inline connector types: Twist Tight, 308, Nicor.

When ordered separately, the endpoint and encoder (or electronic meter) inline connectors come with removable caps, which can be removed in the field before joining the connector ends. With the proper orientation, the connector ends go together easily. No tools are necessary.

NOTE: Additional removable caps are available for order. Part numbers are listed in *Figure 60*, *Figure 62*, *and Figure 64*.
, 3Select connectors are available for order with a plastic cable shield. The cable shield offers extra protection for harsh environments such as pit installations. Alternatively, a 100 foot spool of the plastic cable shield is available for purchase, part 68878-001, to add on in the field.

⚠CAUTION

BEFORE JOINING, MAKE SURE ALL SURFACES OF THE CONNECTOR ENDS ARE CLEAN, DRY, AND FREE OF ANY DEBRIS OR DIRT. THIS STEP IS ESSENTIAL TO MAKE SURE THE CONNECTOR REMAINS WATER TIGHT AND SUBMERSIBLE.

Twist Tight Connector

To use the Twist Tight connector, follow these steps and refer to *Figure 60*.

1. Remove the protective caps. Twist the rotating collar on each connector counter clockwise (left) to loosen and remove the cap.
2. Align the notches inside each connector and push the ends together until the endpoint-side is fully seated in the encoder-side connector.

Figure 59: Twist Tight inline connector

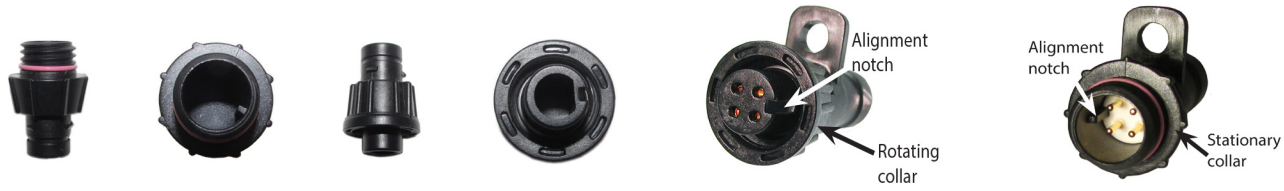

Protective cap endpoint-side 68307-007 | Protective cap encoder-side 68307-008 | Endpoint-side | Encoder-side

Figure 60: Twist Tight connector ends and caps - close up view

3. On the endpoint-side connector, twist the rotating collar clockwise (right) until the ends are tightly connected. When tightly connected, the tabs at the top of the connectors should be aligned and the red O-ring on the encoder-side connector should NOT be visible.

IMPORTANT

Do NOT use tools to tighten the connector ends. Hand tighten only.

Twist Tight Extension Harness

An extension harness connects inline between the meter- and endpoint-side connectors. Extension harnesses are available in the lengths shown.

Part Number Harness only	Extension Harness Length
68307-009	5 ft extension
68307-010	10 ft extension

NOTE: For more information about the Twist Tight connector, refer to the *Twist Tight Inline Connector Assembly Application Data Sheet*, available at *www.badgermeter.com*.

308 Connector

To use the 308 connector, follow these steps and refer to *Figure 62*.

1. Squeeze the notched area and pull to remove the cap(s).
2. Align the notches inside each connector and push the ends together. You will hear a "click" when the connector ends are firmly seated and secure.

Figure 61: 308 inline connector

Protective cap endpoint-side
66233-005

Protective cap encoder-side
66233-006

Endpoint-side

Encoder-side

Figure 62: 308 connector ends and caps - close up view

NOTE: For additional information, refer to the *308 Inline Connector Assembly Application Data Sheet*, available at *www.badgermeter.com*.

Nicor Connector

To use the Nicor connector, follow these steps and refer to *Figure 64*.

1. Pull the cap(s) straight off to remove.
2. Locate the arrow on each connector. With the arrows pointed toward each other, **install at a 45 degree angle to prevent air from bubbling in the connection**. Push the ends together until the encoder-side connector is fully seated into the endpoint-side connector. There should be no visible gap.

Figure 63: Nicor inline connector

Dust cap endpoint-side
66488-014

Dust cap encoder-side
66488-004

Endpoint-side

Encoder-side

Figure 64: Nicor connector ends and caps - close up view

Nicor Extension Harness

An extension harness connects inline between the meter- and endpoint-side connectors. An extension harness in this lead length is available with the Nicor connector.

Part Number	Extension Harness Length
66488-024	10 ft extension

USING GEL CAPS TO CONNECT AN ENCODER

For those connections that are not factory wired or equipped with inline connectors, follow these guidelines for using gel caps when splicing is required, either for installation or to fix a connection after a tamper. Refer to the wiring charts for each ORION endpoint, starting on *page 6*.

NOTE:

- For pit environments, splice connections require a field splice kit (**62084-001**), which can be ordered separately. Refer to *Field Splice Kit for Badger Meter AMR/AMI Products,* available at *www.badgermeter.com*.
- For all installations, excess wire should be coiled and cable tied to avoid any damage.

Required Tools

Splicing Tools (Customer Supplied)	**Badger Meter Part Number**
• Parallel Pliers	59983-001
• Coax Wire Stripper	59989-001
• Diagonal Cutting Pliers	n/a

Connecting an Encoder Using Gel Caps

Follow these steps when using Badger Meter supplied gel caps.

1. To connect an encoder with existing wires to an ORION endpoint, strip approximately 1-1/2 inches (38 mm) of outer insulation sheath from the encoder and endpoint cables using a coax wire stripping tool. We recommend using the Badger Meter Coax Wire Stripper (**59989-001**).

   ⚠CAUTION

   USE CAUTION WHEN REMOVING THE OUTER SHEATH SO THAT THE INNER SIGNAL WIRE INSULATION IS NOT NICKED OR DAMAGED.

2. Unwind the outer foil shield from the endpoint cable and cut it off even with the outer sheath using diagonal cutting pliers.
3. Connect the ORION endpoint to an approved encoder. Verify the endpoint serial number prior to completing the wiring setup.
   - Connect the encoder cable wires to the ORION endpoint wires using the insulation gel caps provided in the installation kit. Refer to the wiring charts for the endpoint type starting on *page 7* and determine which wires need to be connected to complete an installation.

     NOTE: The terminal posts and wire colors may not match.

     ⚠CAUTION

     DO NOT STRIP ANY INSULATION FROM THE ENDS OF THE WIRES BEFORE YOU PUSH THEM INTO THE GEL CAP.

   - Insert the wires from each cable end as far as possible into the gel cap. See *Figure 65: Wires in gel cap*.

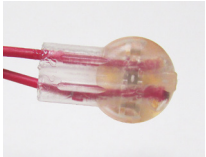

Figure 65: Wires in gel cap

- Using a crimping tool such as the Badger Meter Parallel Pliers (**59983-001**), place the gel cap with the wires into the jaws of the crimping tool.

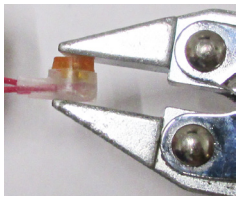

Figure 66: Gel cap in crimping tool

- Crimp the gel cap by squeezing the crimping tool handles until the gel cap is completely compressed. The Badger Meter Parallel Pliers is designed to apply just enough pressure to crimp the gel cap. Apply pressure for three seconds.

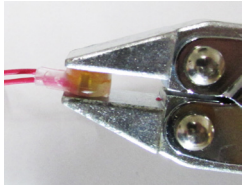

Figure 67: Compress the gel cap

- Repeat the crimping procedure for the remaining gel caps and wires.

4. Attach the two plastic cable ties and tighten securely for strain relief. Snip off the excess cable tie with the wire cutter.
5. For remote installations, the connection is complete.

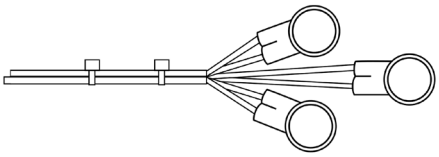

Figure 68: Cable tie attachment locations

NOTE: For pit installations, an appropriate field splice kit should be used. If using the Badger Meter Field Splice Kit, refer to the *Field Splice Kit Application Data Sheet* provided with the kit.

Testing Wire Connections

Test all wiring connections to confirm connectivity, and to verify the ORION endpoint reading and the encoder reading are the same. The connections can be tested using the Quick Read function with either an ORION handheld or mobile data collector. See the appropriate software manual, available at *www.badgermeter.com*, for more information.

INTENTIONAL BLANK PAGE

ADE, BEACON, ORION and RTR are registered trademarks of Badger Meter, Inc. Other trademarks appearing in this document are the property of their respective entities. Due to continuous research, product improvements and enhancements, Badger Meter reserves the right to change product or system specifications without notice, except to the extent an outstanding contractual obligation exists. © 2025 Badger Meter, Inc. All rights reserved.