Preso®
Differential Pressure Flow Meters

Ellipse® Pitot Tube Meter

AS Annular Threaded Steam Meter

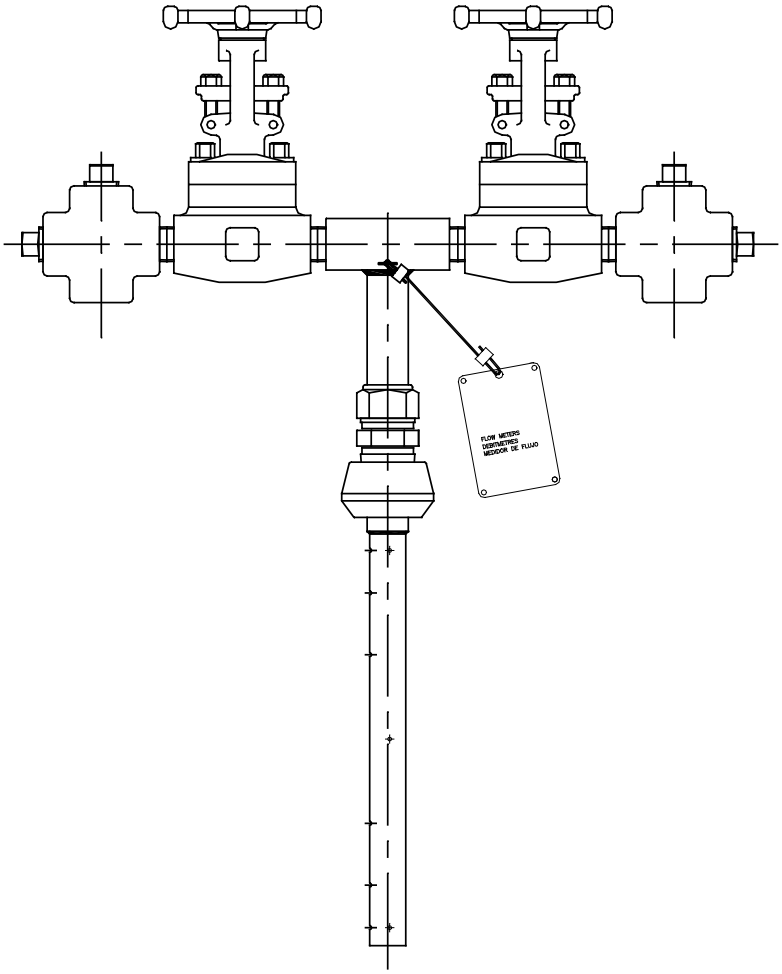

Badger Meter

PTT-UM-00515-EN-03 (August 2021)

User Manual

CONTENTS

Introduction. 3

Specifications 3

Pipe Orientation and Sensor Mounting 4

Installation Instructions, Single Support 5

Installation Instructions, Double Support 6

Typical Installation with Differential Pressure Transmitter 6

Location Instructions 7

Flow Curve 8

INTRODUCTION

The Preso patented elliptical design outperforms and provides greater accuracy than traditional differential pressure flow measurement devices. This differential pressure flow meter is designed with a series of ports facing the upstream velocity pressures, as well as flow sensing ports strategically located ahead of the trailing edge flow separation.

The multi-ported, self-averaging flow element consists of an elliptical shape with two independent flow sensing chambers. The impact velocity sensing holes (high pressure) are located along the leading edge and the true static sensing holes (low pressure) are on the exterior probe side. Model AS comes with instrument shutoff valves with provisions to accept a transmitter or direct indicating meter.

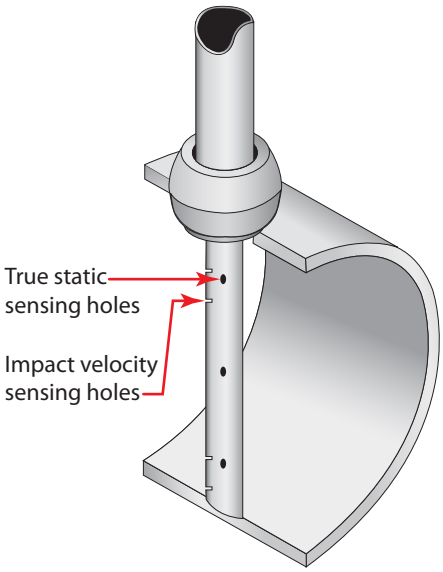

Figure 1: AS pressure sensing holes

SPECIFICATIONS

Applications	Steam
Pipe Sizes	2…48 inches (50…1220 mm)
Pressure	600 psi (4100 kPa) maximum
Temperature	480° F (250° C) maximum
Accuracy	±0.75% of reading
Turndown Ratio	17:1 with no vacuum effect
Standard Components	T-type head, 316 SS 1/2 in. FNPT connection CS compression fitting with SS ferrule CS 3000 lb weld fitting, ASTM A105 316/316L SS Ellipse sensor 316 SS ID tag with wire
Reynolds Number	Greater than 75,000 maintains most accurate flow measurements Less than 75,000 consult factory for estimated results
Resonance	If greater than 0.8, use double support.

Table 1: Specifications

PIPE ORIENTATION AND SENSOR MOUNTING

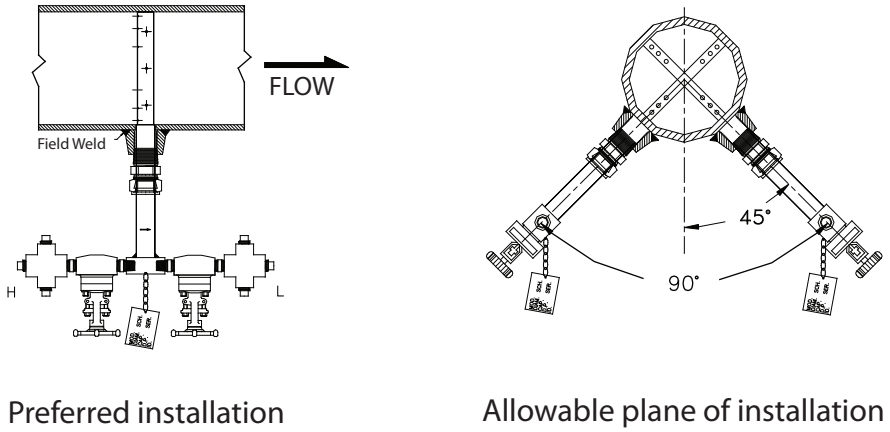

Figure 2: Horizontal pipe installation

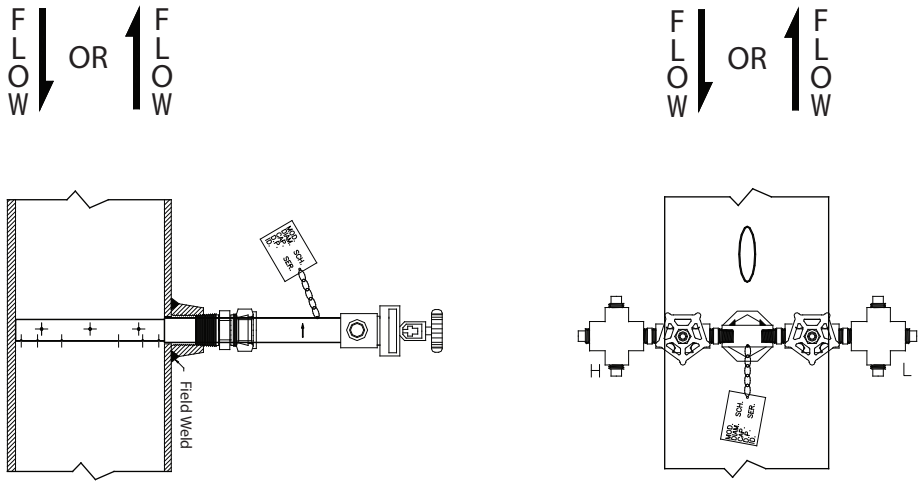

NOTE: Preferred flow direction for steam is upward.
Illustration represents installation for upward flow.

Figure 3: Vertical pipe installation

NOTE: For general steam applications, instrument valves should be mounted at the same elevation to maintain equal condensation levels.

INSTALLATION INSTRUCTIONS, SINGLE SUPPORT

1. Choose the proper location to install the AS Ellipse using AGA/ASME standards (or equivalent). See *"Location Instructions" on page 7*.
2. Grind the surface of the pipe where the AS Ellipse is to be inserted to provide a clean area for welding.
3. Weld the supplied weld-o-let to the pipe using standard codes for your application (1/16 in. weld gap recommended). Take care to protect the threads during the welding process.
4. Drill a hole through the pipe wall according to *Table 2*.
5. Deburr the hole just drilled, especially on the inside of the pipe.

Model / Sensor	Weld Connector	Drill Bit
AS (7/8 in.)	1 in.	1-1/8 in.
AS1 (1-1/4 in.)	1-1/4 in.	1-3/8 in.

Table 2: Single support drill bit size

6. Assemble the supplied compression fitting as diagrammed in *Figure 4*. Thread the assembled compression fitting into the weld-o-let manually. With a wrench, tighten the body of the fitting another 1-1/4 turns, taking care not to tighten the compression nut.
7. Install the instrument valves (optional) at the AS Ellipse head connections. Make sure the valves are FULLY CLOSED to prevent them from leaking during startup. Install the two forged crosses to the valves.
8. Insert the AS Ellipse through the compression fitting. Carefully push the sensor by hand further into the pipe until it reaches the opposite wall.
9. While holding the AS Ellipse in its fully inserted position, align the arrow on the sensor head with the direction of flow. See *Figure 5*.

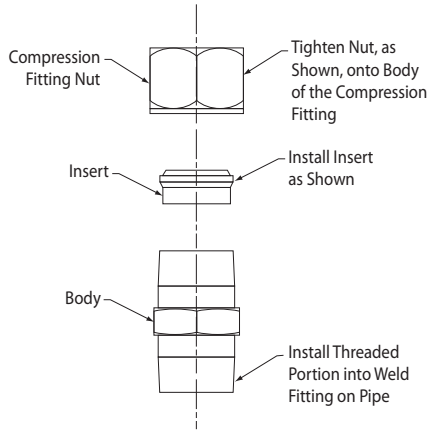

Figure 4: Compression fitting

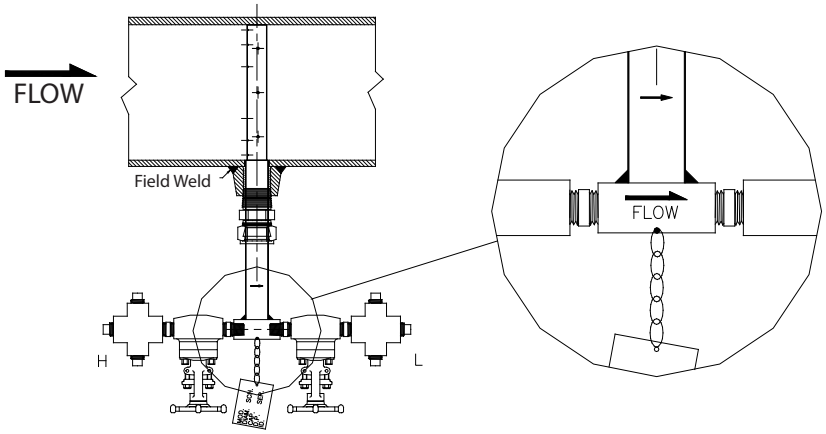

Figure 5: Sensor alignment

10. To prevent leakage, manually tighten the compression nut, the use a wrench to tighten it another 1-1/4 turns.
11. Connect the 1/2 in. tubing to the connections on the forged cross components. Connect these lines to a three-valve manifold transmitter.
12. Verify that the instrument valves are FULLY CLOSED. Remove the 1/2 in. plugs from the top and side ports of the two forged cross tees.
13. Slowly pour water into the top ports of each forged cross tee until the system is full. Water will flow out of the side ports of both crosses.
14. Reinstall the 1/2 in. plugs into the top and side ports. Ensure that they are secure. Then fully open the two gate valves.
15. Allow condensation levels to stabilize for 30 minutes before taking instrument reading.

INSTALLATION INSTRUCTIONS, DOUBLE SUPPORT

1. Follow steps 1 through 7 in *"Installation Instructions, Single Support" on page 5*. At 180° from and on the same plane as the previously drilled hole, grind the surface of the pipe to provide a clean area for welding. Drill a hole and deburr, especially on the inside of the pipe. Size the hole used for the double support according to *Table 3*.
2. Weld the double support weld-o-let, making sure that it is centered with the drilled hole (1/16 in. weld gap recommended).

Model / Sensor	Weld Connector	Drill Bit
AS (7/8 in.)	1/2 in.	1/2 in.
AS1 (1-1/4 in.)	1 in.	7/8 in.

Table 3: Double support drill bit size

3. Install the AS Ellipse sensor through the two holes. Make sure that the double support pin passes through the guide ring. See *Figure 6*.

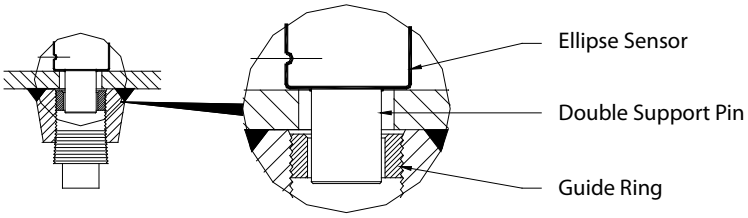

Figure 6: Double support pin

4. While holding the AS Ellipse in its fully inserted position, align the sensor head with the direction of flow as in step 9, *"Installation Instructions, Single Support" on page 5*.
5. Check that the AS Ellipse is in the correct orientation and spans the inside of the pipe. Tighten the compression nut manually, then use a wrench to tighten it another 1-1/4 turns.
6. Install the plug into the end of the double support weld-o-let. Tighten the plug to prevent leakage. Ensure that there is no leakage in the system.
7. Follow steps 11 through 15 in *"Installation Instructions, Single Support" on page 5*.

TYPICAL INSTALLATION WITH DIFFERENTIAL PRESSURE TRANSMITTER

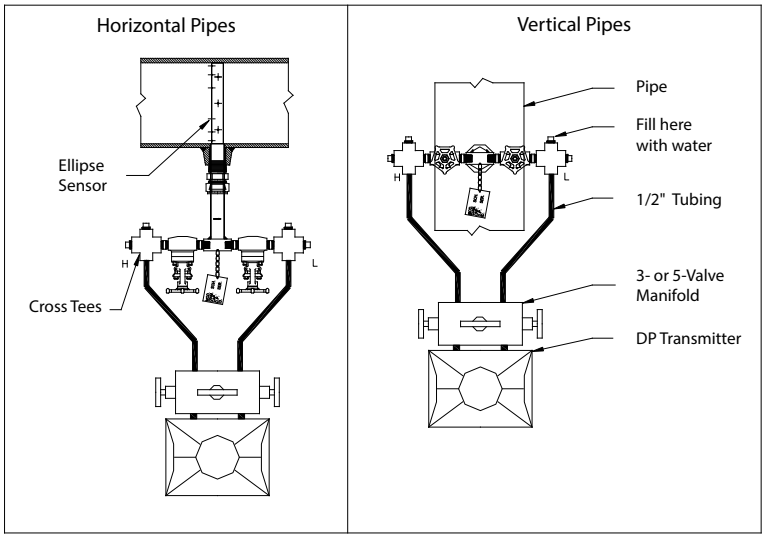

Figure 7: Installation with differential pressure transmitter

LOCATION INSTRUCTIONS

Straight pipe requirements: Accuracy is affected by the piping configurations due to the disturbances of the flow profile. A fully developed symmetrical flow profile is achieved with the minimum upstream and downstream recommended lengths.

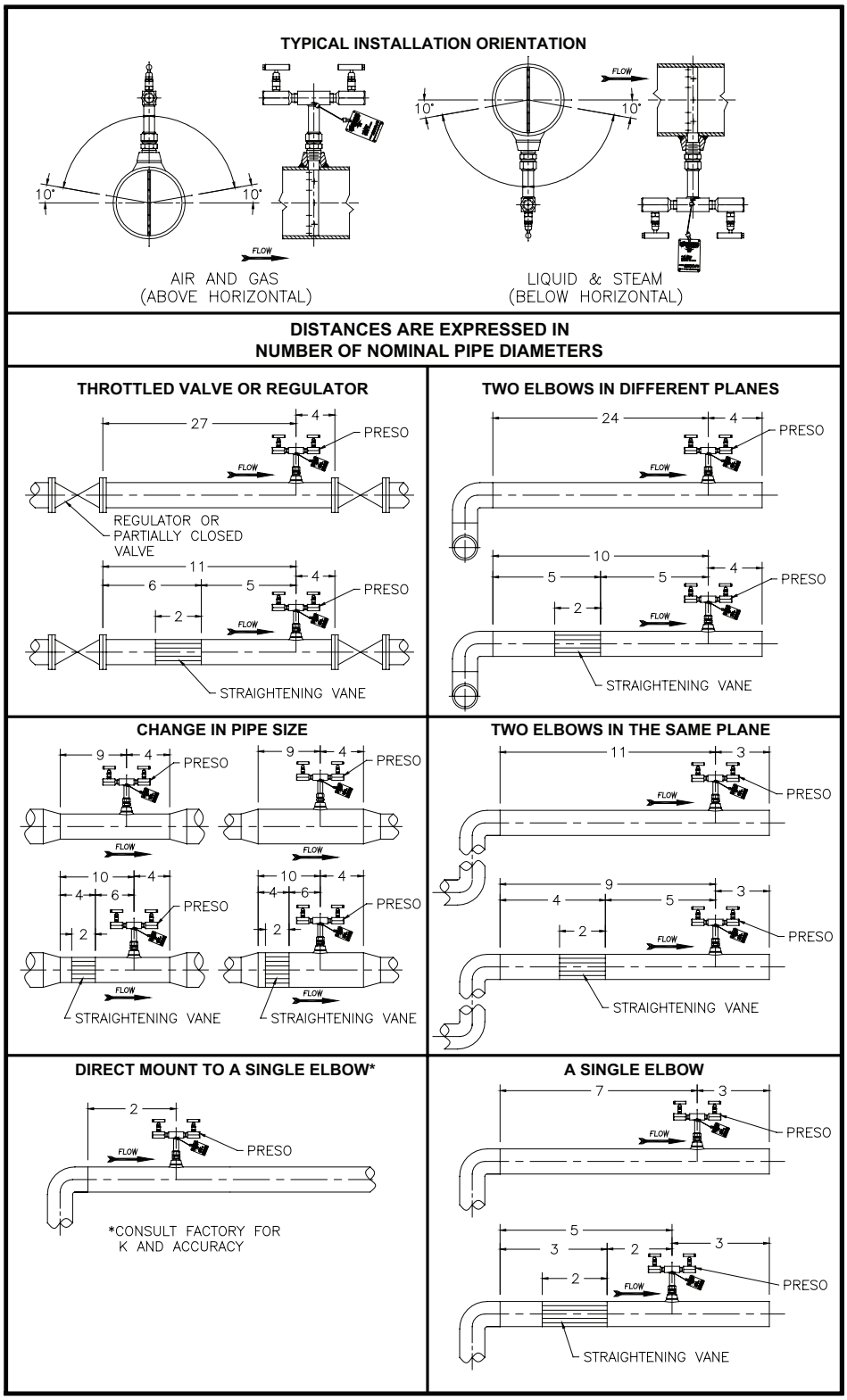

Figure 8: Location instructions

FLOW CURVE

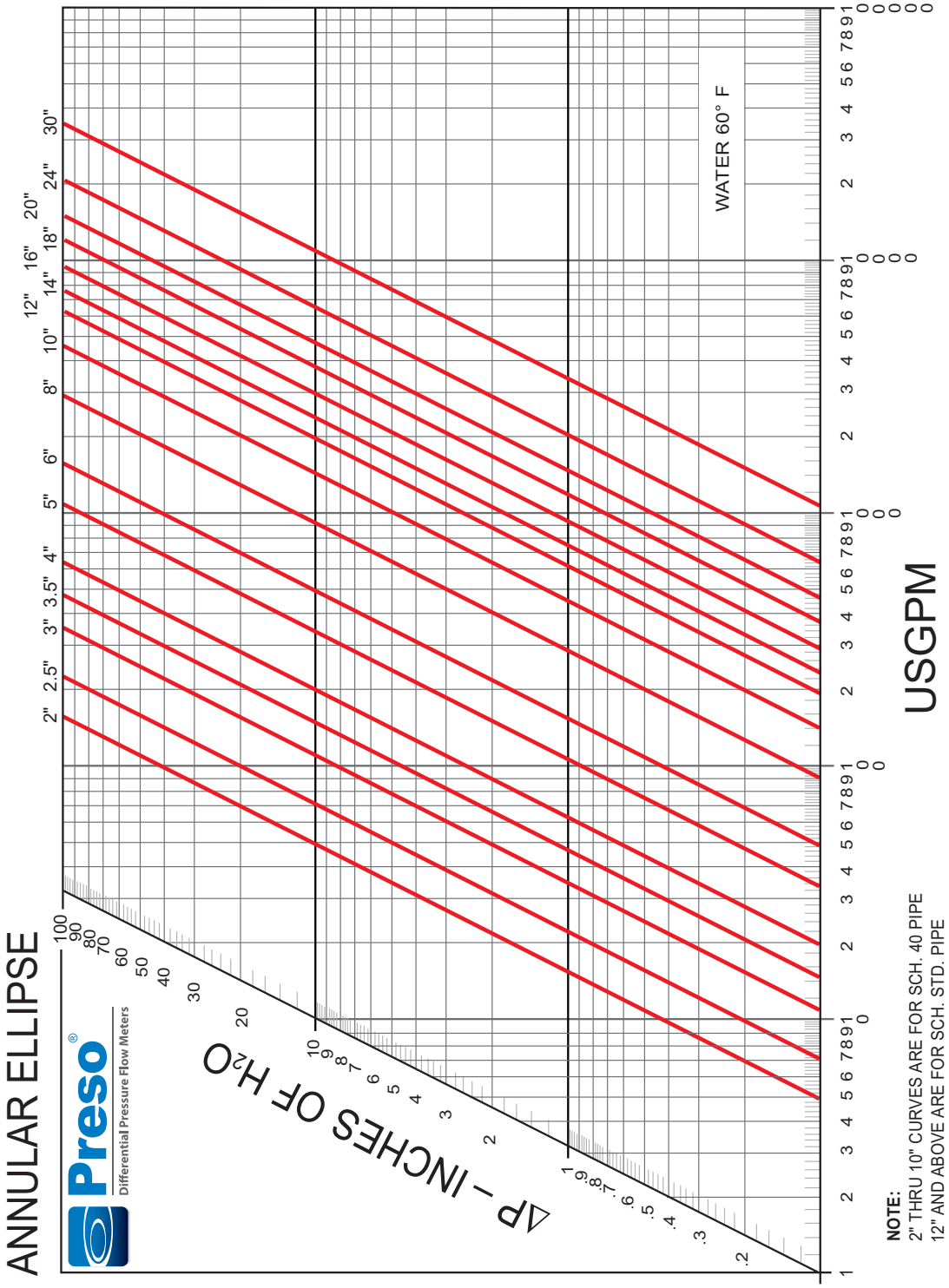

Figure 9: Flow curve

Control. Manage. Optimize.

Preso is a registered trademark of Badger Meter, Inc. Other trademarks appearing in this document are the property of their respective entities. Due to continuous research, product improvements and enhancements, Badger Meter reserves the right to change product or system specifications without notice, except to the extent an outstanding contractual obligation exists. © 2021 Badger Meter, Inc. All rights reserved.

www.badgermeter.com