ORION® Cellular HLB Water Endpoints

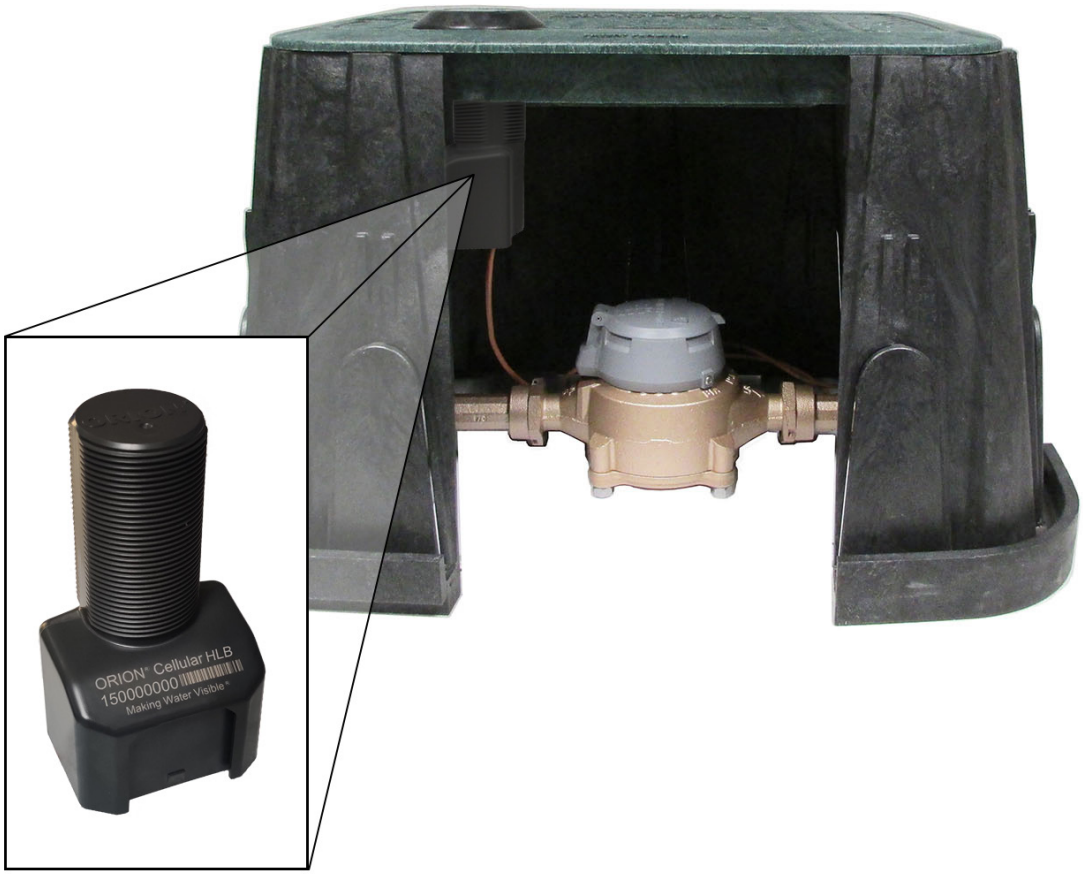

Badger Meter

ORI-UM-04149-EN-02 (August 2023)

Installation Manual

CONTENTS

SCOPE OF THIS MANUAL . . . 3
Additional Resources . . . 3
LICENSE REQUIREMENTS . . . 3
PRODUCT UNPACKING AND INSPECTION . . . 4
IDENTIFICATION . . . 4
Endpoint Dimensions . . . 5
Encoders . . . 5
ENDPOINT CONFIGURATIONS . . . 6
INSTALLATION . . . 6
Activating the Endpoint . . . 8
Changing the Registration for an Existing ORION Endpoint Assembly . . . 9
IR PROGRAMMING . . . 9
ENDPOINT INSTALLATION KITS . . . 10
64394-032 WALL COVER INSTALL KIT . . . 11
67625-001 IR Holder for Wall Cover Install Kit . . . 13
Outdoor Installation for Endpoint with Inline Connector . . . 14
64394-031 WALL BRACKET INSTALL KIT . . . 15
64394-008 C-CLAMP WALL BRACKET INSTALL KIT . . . 15
64394-003 PIPE INSTALL KIT . . . 16
64394-023 COMMERCIAL METER MOUNTING BRACKET INSTALL KIT . . . 17
64394-030 THRU-THE-LID INSTALL KIT . . . 19
APPENDIX:
ENDPOINT STATUS TOOL . . . 20
INLINE CONNECTORS . . . 22
Twist Tight Connector . . . 22
308 Connector . . . 23
Nicor Connector . . . 24
GEL CAPS TO CONNECT AN ENCODER . . . 25
Required Tools . . . 25
Connecting an Encoder Using Gel Caps . . . 25
Testing Wire Connections . . . 26

SCOPE OF THIS MANUAL

This manual contains installation instructions for ORION® Cellular HLB water endpoints.

- Failure to read and follow the instructions in this document can lead to misapplication or misuse of this product, resulting in personal injury and damage to equipment.
- Do not use ORION endpoints for purposes other than those for which they were intended. Proper performance and reliability of ORION endpoints depend upon installation and use in accordance with these instructions.
- Installation of ORION endpoints must comply with all applicable federal, state and local rules, regulations and codes.
- **WARNING**: The operation of transmitters and receivers on airlines is strictly prohibited by the Federal Aviation Administration. As such, the shipping of radios and endpoints via air is prohibited. Please follow all Badger Meter return and/or shipping procedures to prevent exposure to liability.

Additional Resources

In addition to this document, see the complete list of ORION endpoint documents at *www.badgermeter.com*, including the following:

- *ORION Water Endpoints Installation Kit Ordering Guide*
- *ORION Water Endpoint Parts List*
- *ORION Water Endpoints Installation Manual*
- *Product Configuration Utility for ORION Endpoints Software Manual*

LICENSE REQUIREMENTS

ORION Cellular HLB endpoints comply with Part 15, Part 22, Part 24, and Part 27 of the FCC Rules. In accordance with FCC Regulations, "Code of Federal Regulations" Title 47, Part 2, Subpart J, Section 1091, transmitters pass the requirements pertaining to radiation exposure. However, to avoid public exposure in excess of limits for general population (uncontrolled exposure), a 20 centimeter distance between the transmitter and the body of the user must be maintained during operation.

No FCC license is required by a utility to operate an ORION meter reading system.

This device complies with Industry Canada license-exempt RSS standard(s). Operation is subject to the following two conditions: (1) this device may not cause interference, and (2) this device must accept any interference, including interference that may cause undesired operation of the device.

Le présent appareil est conforme aux CNR d'Industrie Canada applicables aux appareils radio exempts de licence. L'exploitation est autorisée aux deux conditions suivantes : (1) l'appareil ne doit pas produire de brouillage, et (2) l'utilisateur de l'appareil doit accepter tout brouillage radioélectrique subi, même si le brouillage est susceptible d'en compromettre le fonctionnement.

The ORION Cellular HLB endpoint is constructed so that it can operate in at least one Member State without infringing applicable requirements of the use of radio spectrum (RED - Article 10.2). ORION Cellular HLB endpoints comply with the requirement regarding putting restrictions into service in Article 10.10 of Directive 2014/53/EU. The ORION Cellular HLB endpoint has no restrictions to put in service.

PRODUCT UNPACKING AND INSPECTION

Upon receipt of the product, perform the following unpacking and inspection procedures.

NOTE: If damage to the shipping container is evident upon receipt, request the carrier to be present when the product is unpacked.

Carefully open the shipping package, following any instructions that may be marked on the exterior. Remove all cushioning material surrounding the product.

ORION Endpoints: Carefully remove the pre-wired ORION endpoint and encoder assembly or ORION endpoint from the container and inspect for damage. Retain the contents of the installation kit for use in mounting the endpoint in the field.

Other products: Carefully lift the product from the package. Visually inspect the product and applicable accessories for any physical damage such as scratches, loose or broken parts or any other sign of damage that may have occurred during shipment. Retain the package and all packing material for possible use in reshipment or storage.

NOTE: If damage is found, request an inspection by the carrier's agent within 48 hours of delivery and file a claim with the carrier. A claim for equipment damage in transit is the sole responsibility of the purchaser.

IDENTIFICATION

The ORION Cellular HLB endpoint is a three-wire metering device.

Each ORION endpoint has a unique numeric serial number on the tag attached to the cable harness (wire) and etched on one side of the endpoint housing. A yellow product label is displayed on the other side (*Figure 1*).

ORION Cellular HLB endpoints use serial numbers 150000000…159999999.

Endpoints require connection to an encoder to complete the assembly. Badger Meter encoders are shown in *Figure 3*.

Serial number

Product label

Figure 1: ORION Cellular HLB endpoint

Endpoint Dimensions

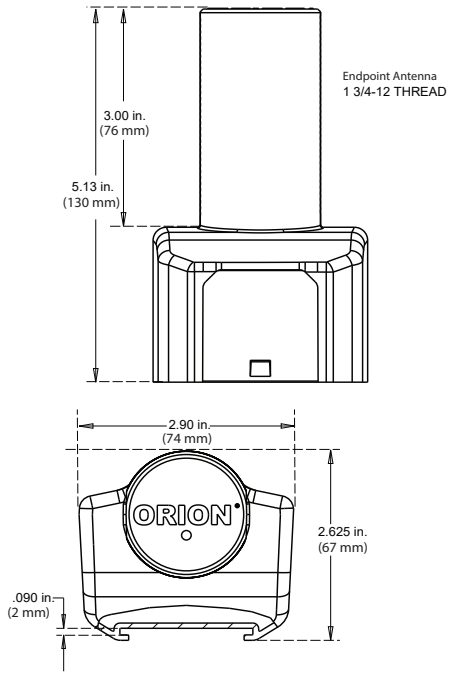

Figure 2: Endpoint dimensions

Encoders

Each Badger Meter encoder is identified on the face of the register with an assembly number, unit of measure and meter model. Current encoders are pictured in *Figure 3*.

High Resolution LCD Encoder (HR-E® LCD)

E-Series® Ultrasonic Meter
with High Resolution LCD Encoder

High Resolution 8-Dial Encoder (HR-E®)

Figure 3: Badger Meter Encoders

ENDPOINT CONFIGURATIONS

ORION Cellular HLB endpoints can be ordered in the configurations listed here.

Endpoint Configurations	Encoder Connection
Endpoint only with inline connector (Twist Tight or Nicor®)	Connect the endpoint to an encoder using the inline connector. See *"Endpoint Installation Kits" on page 10,* and *"Activating the Endpoint" on page 8*.
Endpoint only with flying lead for field splice	See *Field Wiring, Encoder Connectivity and Read Resolution* below and on the next page for field wiring information.
Endpoint/encoder assembly with inline connector	Endpoints connected to a Badger Meter encoder are shipped, ready for installation. See *"Endpoint Installation Kits" on page 10,* and *"Activating the Endpoint" on page 8*.

NOTE: For information on available inline connectors, see *"Inline Connectors" on page 22*.

INSTALLATION

This section covers endpoint installation, encoder compatibility, and activation.

IMPORTANT

Endpoints that are not properly installed may not be covered under warranty. If the equipment is used in a manner not specified, the protection provided by the equipment may be impaired.

Connect the endpoint to an encoder to complete the assembly and install according to these guidelines:

- **Indoor/Outdoor Installation:**
  - Indoor installation is **recommended**. Mount indoors in the floor joist, near an outside wall, and away from large metal objects.
  - Outdoor installation is acceptable and may be required where signal strength does not support an indoor installation.
- **Pit Installation**: MOUNTING THROUGH A *NON-METAL* PIT LID IS **REQUIRED**.

Field Wiring, Encoder Connectivity and Read Resolution

ORION endpoints are shipped from the factory pre-programmed and are available in an indoor/outdoor, three-wire configuration for connection to the encoders listed below. All three wires must be connected to complete an installation. The endpoint connection can be made to either existing wires from the encoder or directly to the terminal screws of the encoder, depending on the application and manufacturer. Follow the manufacturer's instructions provided with the gel splice or field splice kit you are using. *See also "Endpoint Installation Kits" on page 10*.

NOTE: For instructions on field wiring using gel connectors, see *"Gel Caps to Connect an Encoder" on page 25* .

ORION endpoints with flying leads can be connected to Badger Meter high resolution encoders and E-Series Ultrasonic meters as well as a number of competitive encoders as shown in the following wiring chart.

ORION endpoint wires: Red = Power/Clock; Black = Ground; Green = Data

Endpoint Label	Encoder Connectivity	Encoder Wire/Termination Colors	Endpoint Wire Colors Red	Black	Green	Reading Resolution
ORION Cellular HLB	Badger Meter HR-E LCD or HR-E encoders or E-Series Ultrasonic and Ultrasonic Plus Meter with High Resolution output		Red	Black	Green	Up to nine (9) most significant digits
	Honeywell® (Elster/ABB) ScanCoder, evoQ4 meter with Sensus® protocol module		Green	Black	Red	Up to nine (9) most significant digits
	Metron-Farnier Hawkeye*		Red	Black	Green	Up to nine (9) most significant digits
	Mueller Systems 420 Solid State Register (SSR) LCD*		Red	Black	Green	Up to nine (9) most significant digits
	Neptune ProRead, E-coder, ARB-V* or ProCoder with encoder output		Black	Green	Red	Up to nine (9) most significant digits
	Neptune registers with Nicor connector		Red	Black	Green	Up to nine (9) most significant digits
	Sensus iPerl®		Red	Black	Green	Up to nine (9) most significant digits
	Master Meter® Octave® Ultrasonic meter (encoder output)*		Red	Black	Green	Up to eight (8) most significant digits
	Hersey Translator*		Due to the customized, factory wire configurations of the Hersey Translator, the terminal posts may not match the ORION endpoint wire colors. Please contact Hersey for the terminal post wiring schematic of your encoders to determine how the posts correspond to ORION endpoint wires.			

NOTE: Competitive encoder output is determined by the encoder configuration.

*ORION Cellular endpoints are compatible with the encoders/meters noted above with a manufacture date within 10 years of the current date as long as the encoder has three wires connected to it and is programmed into the three-wire output mode for AMR/AMI. Encoder registers that are currently in two-wire mode of operation require programming by the Utility, including registers that support auto two- or three-wire detection systems that do not automatically switch to three-wire mode of operation once a compatible endpoint is connected for ORION connectivity.

The only allowed interconnection of the endpoint to the encoder is the cable provided for interconnection to passive elements of a water meter. This cable provides SELV low voltage limited energy power to the load and should only be connected to passive elements of water meters.

⚠ WARNING

TO REDUCE THE POSSIBILITY OF ELECTRICAL FIRE AND SHOCK HAZARDS, NEVER CONNECT THE CABLE FROM THE ENDPOINT OR ENCODER TO ANY ELECTRICAL SUPPLY SOURCE.

Activating the Endpoint

Activation is dependent on whether the endpoint is shipped in "Pause" or "Stop" mode. Refer to *Smart Activation for Endpoints in Pause Mode* or *Activation for Endpoints in Stop Mode* in this section as needed.

Smart Activation for Endpoints in Pause Mode

IMPORTANT

The Smart Activation feature does not apply to endpoints in Stop mode (hard sleep). See "Activation for Endpoints in Stop Mode" on page 9.

ORION endpoints offer a *Smart Activation* feature which utilizes consumption to automatically start the endpoint. After installation of an endpoint in Pause mode, the endpoint radio "wakes up" and begins broadcasting data when the encoder to which it is connected detects enough water usage from the register. The amount of consumption required depends on the encoder output and meter size.

No field programming or special tools are required to activate ORION endpoints in Pause mode. IR activation tools are available for use, however, if immediate activation is desired. Refer to the *Product Configuration Utility for ORION Endpoints software manual,* available at *badgermeter.com* for more information.

NOTE: Smart Activation is available for endpoints that are connected to encoders with a minimum 7-dial electronic output. Use of the Smart Activation feature is not recommended for an endpoint connected to a 6-dial encoder or any encoder/meter with electronic output less than 6-dials.

Endpoint/Encoder Assemblies

An initial encoder read is stored by the endpoint at the time the encoder and endpoint are factory connected and the endpoint is put in Pause mode (soft sleep). While in Pause mode, the endpoint monitors the encoder for consumption, checking once every fifteen minutes. When the endpoint/encoder assembly is installed and water is running through the meter, the endpoint automatically "wakes up" and transitions to its operational mode once the required amount of consumption is registered (see table below).

Encoder Output	Dial Change Required to Activate
7-dial	Any 1 unit change in the least significant digit
8-dial	Any 5 unit change in the least significant digit
9-dial	Any 5 unit change in the least significant digit

Table 1: Activation consumption thresholds

When the endpoint transitions to operational active mode, it begins the network registration process. BEACON Software as a Service (SaaS) will assign an ORION Cellular endpoint its daily call-in time as part of this process. Active endpoints obtain a current encoder read every 15 minutes.

Endpoint Only

Like endpoint/encoder assemblies, ORION endpoint only configurations can be shipped in Pause mode. The initial encoder read will be established the first time an endpoint is field connected to an encoder.

NOTE: It may take up to fifteen (15) minutes for an endpoint to recognize the initial encoder read. To expedite this process, Badger Meter recommends connecting an ORION endpoint to an encoder in advance of field installation so the baseline encoder read is captured before installing the endpoint.

After the initial encoder read is stored, the endpoint monitors the encoder for consumption, checking for a change in the encoder read once every fifteen minutes thereafter. The endpoint automatically "wakes up" and transitions to its operational active mode once the required amount of consumption is registered (see *Table 1*).

The endpoint transitions to active mode and begins the network registration process. BEACON assigns an ORION Cellular endpoint its daily call-in time as part of this process. Once activated, the endpoint obtains a current encoder read every 15 minutes.

Activation for Endpoints in Stop Mode

Endpoints shipped in Stop mode (hard sleep) ***must be manually activated*** via infrared (IR) communication. This can be accomplished using an ORION handheld or mobile reading system and the Product Configuration Utility software. The software can also be used to identify the endpoint radio "mode." For more information, see the *Product Configuration Utility for ORION Endpoints software manual* at *badgermeter.com*.

Alternatively, the Badger Meter IR Communication Device (68891-001) can be used to activate the endpoint and verify the encoder connection.

Once the endpoint is manually activated, the process is the same as for endpoints in Pause mode. The endpoint transitions to Active mode and begins the network registration process. BEACON assigns an ORION Cellular endpoint its daily call-in time as part of this process. Active endpoints obtain a current encoder read every 15 minutes.

Confirming Installation

Before leaving the installation site, the installer can confirm endpoint activation one of two ways.

1. BEACON® users can check endpoint activation status with the ***ORION Endpoint Status*** tool. Endpoints do not need to be provisioned in BEACON to display using the tool. See *"Appendix: Endpoint Status Tool" on page 20* for more information.
2. The installer can use the Product Configuration Utility software to confirm activation via IR. Refer to the appropriate user manual for more information.

Endpoints automatically transition to the appropriate network.

Changing the Registration for an Existing ORION Endpoint Assembly

If you change an encoder connected to an ORION Cellular HLB endpoint, the endpoint will recognize the new encoder and report previous and current interval data.

IR PROGRAMMING

You can program the following functions for the ORION Cellular HLB endpoint using the Product Configuration Utility software available from Badger Meter.

- *Access Point Region* when the automatic setting may be picking up the wrong region
- *Meter Mode* for selecting Encoder or Pulse/RTR
- *Raw Reading* to change the reading when clearing a tamper alarm or moving the endpoint to a different meter
- *Dial Count* to change the number of digits for the reading

For step-by-step instructions, see the *Product Configuration Utility for ORION Endpoints Software Manual*, available at *badgermeter.com*.

ENDPOINT INSTALLATION KITS

The following kits are available for endpoint installations. Kit information and instructions for using the kits start on *page 11*.

Type	Description	Kit Part Number (PN)
REMOTE	*64394-032 Wall Cover Install Kit*	64394-032
REMOTE	*67625-001 IR Holder for Wall Cover Install Kit*	67625-001
REMOTE	*64394-031 Wall Bracket Install Kit*	64394-031
REMOTE	*64394-008 C-Clamp Wall Bracket Install Kit*	64394-008
REMOTE	*64394-003 Pipe Install Kit*	64394-003
REMOTE	*64394-023 Commercial Meter Mounting Bracket Install Kit*	64394-023
PIT	*64394-030 Thru-the-Lid Install Kit*	64394-030

64394-032 WALL COVER INSTALL KIT

The **Wall Cover Install Kit PN: 64394-032** is recommended for proper mounting of an endpoint in indoor and outdoor remote applications, and is designed to provide an environmentally protected area for gel splice connections (if needed).

Outside dimensions are shown in *Figure 5*.

Figure 4: 64394-032 Wall Cover enclosure

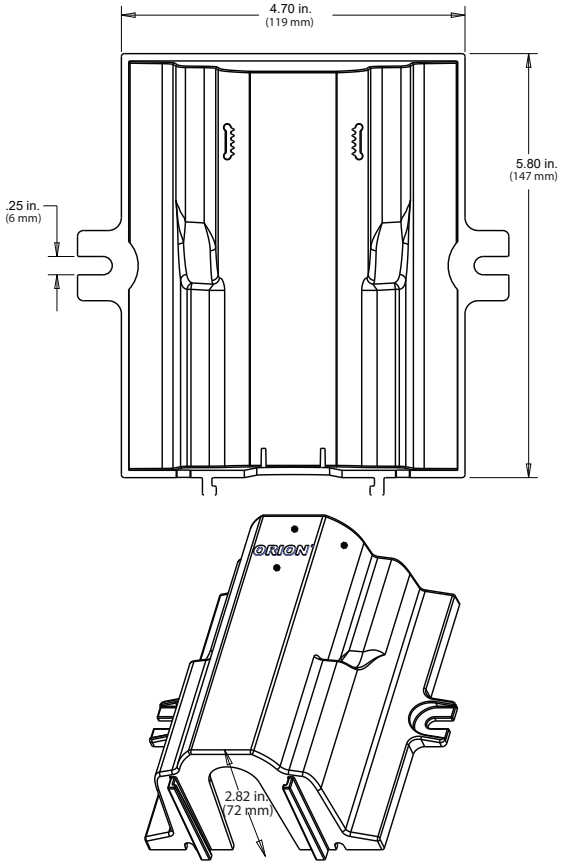

Figure 5: 64394-032 Outside dimensions

To install an ORION endpoint using the 64394-032 Wall Cover install kit, follow these steps.

1. Choose an appropriate installation location within the limits of the connector harness.
2. Verify the proper orientation. The bottom of the wall cover has an opening for IR programming (*Figure 6*). The opening provides access to the IR LED port of the endpoint without having to disassemble the unit. See *"67625-001 IR Holder for Wall Cover Install Kit" on page 13*.

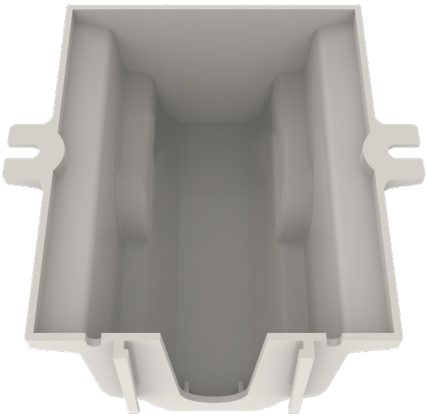

Figure 6: Interior 64394-032

3. Place the endpoint into the enclosure, antenna up.

   Figure 7 shows the correct placement for the ORION Cellular HLB endpoint.

NOTE: If double-sided tape is included in the kit contents, you can use the tape to temporarily secure the endpoint inside the enclosure prior to mounting.

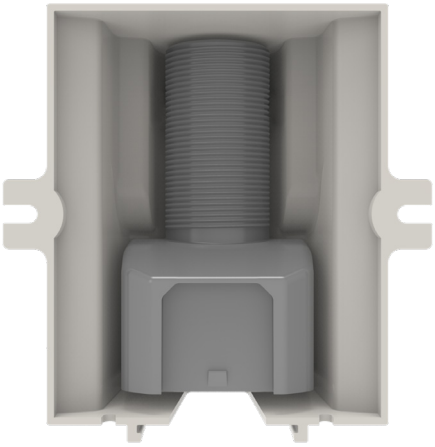

Figure 7: Endpoint orientation

4. After the endpoint is correctly placed inside the enclosure, position the endpoint cable.

NOTE: If you are drilling a hole through the wall behind the enclosure for the endpoint cable, the cable does not need to route through the cutout at the bottom.

- Route the cable through the cutout on the bottom.
- If the endpoint has an inline connector, place the connector *inside* the enclosure with the endpoint and route the connector cable through the cutout on the bottom.

  NOTE: Gel splice connections, if any, can be placed inside the enclosure.

  NOTE: See *"Outdoor Installation for Endpoint with Inline Connector" on page 14* for additional information about installing the endpoint outdoors with the Wall Cover.

5. Verify that the wall cover is properly positioned, with the endpoint antenna up and the endpoint IR LED visible through the bottom opening. The IR LED port is shown in *Figure 11*.
6. Secure the wall cover using customer-supplied screws. Installation is complete.

Figure 8: 64394-032 installation complete

67625-001 IR Holder for Wall Cover Install Kit

An optional **IR Holder for Wall Cover Install Kit (PN: 67625-001)** can be ordered for use with the Wall Cover install kit (**64394-032**). The holder fits on the wall cover adapter rails and is used to position the IR programming head while performing IR functions on ORION endpoints inside the wall cover.

1. Slip the optical head of the IR programming cable into the top of the IR holder with the nubs on the head fitted into the cutouts on the holder (*Figure 9*).

(PN: 67625-001) Holder for the optical head

Optical head of the IR programming cable

Optical head inserted into bracket

Figure 9: IR holder and programming cable optical head

2. Slide the holder onto the adapter rails at the bottom of the wall cover so the optical head is aligned with the endpoint LED port. See *Figure 10* and *Figure 11*.
3. Connect the IR programming cable to a Badger Meter ORION handheld or mobile reading device. Refer to the IR programming instructions in the user manuals for those devices.

Figure 10: Holder on the adapter rails

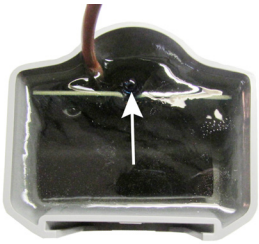

Figure 11: Endpoint IR LED port (bottom up view)

Outdoor Installation for Endpoint with Inline Connector

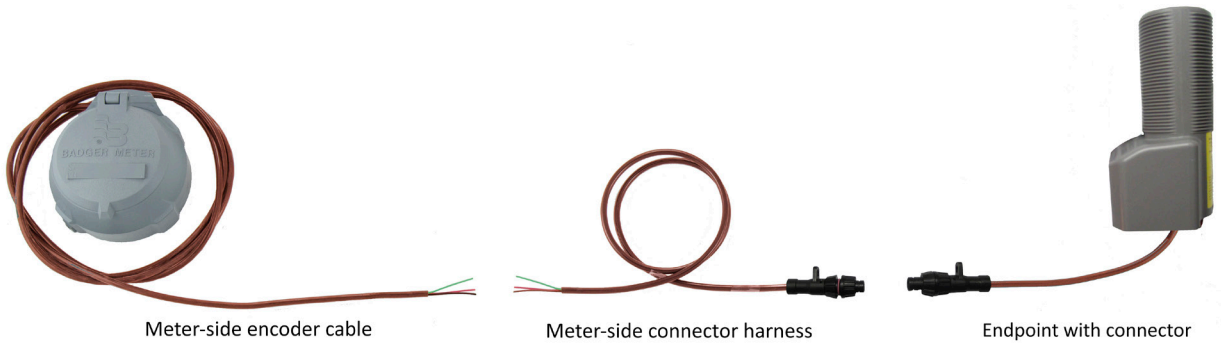

Figure 12: Outdoor endpoint installation

For outdoor installation of an endpoint with an inline connector harness, refer to the image in *Figure 12*. Meter-side connector harnesses are available with Twist Tight and Nicor connectors in the following lengths.

Harness with Twist Tight Connector		**Harness with Nicor Connector**	
Part Number	*Harness Lead Length*	*Part Number*	*Harness Lead Length*
68307-006	10 ft harness	66488-006	10 ft harness
68307-003	25 ft harness	66488-003	25 ft harness

Follow these recommended installation steps for an outdoor installation.

NOTE: The Twist Tight connector is pictured above but the installation steps apply to the Nicor and 308 connectors as well. See *"Inline Connectors" on page 22 f*or more information.

1. Choose an appropriate outdoor location, within the limits of the connector harness.

   NOTE: If using a Wall Mount enclosure, see *"64394-032 Wall Cover Install Kit" on page 11* for additional information on mounting.

2. Join the connector of the endpoint with the connector mate of the encoder. If using a remote wall mount enclosure, place the inline connector inside the enclosure.
3. Drill a small hole in the wall of the structure to accommodate the endpoint cable.
4. Pass the cable end with the flying leads through the wall of the structure.
5. Connect the cable to the encoder inside the structure. Depending on the encoder connection, either field splice the wires or connect the wires directly to the encoder terminal screws.

NOTE: Refer to the *Field Splice Kit Application Data Sheet*, available at *badgermeter.com*, for field splice instructions.

64394-031 WALL BRACKET INSTALL KIT

A **Wall Bracket Kit PN: 64394-031** (*Figure 13*) is available for use with ORION Cellular HLB endpoints.

The bracket clips into the slot on the endpoint and can be used to attach the endpoint to a wall using a screwdriver and two (2) customer supplied screws. The bracket can also be used to mount the endpoint to a pole with cable ties (customer supplied) threaded through the openings on the bracket.

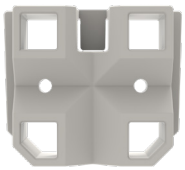

Figure 13: 64394-031

64394-008 C-CLAMP WALL BRACKET INSTALL KIT

The **C-Clamp Wall Bracket Install Kit (PN: 64394-008)** can be used for mounting an endpoint to a wall.

To mount an ORION endpoint using this kit, follow these steps and refer to *Figure 14*.

1. Use an appropriate size fastener and washer (customer supplied) to mount the C-clamp to the wall through the opening at the back of the C-clamp.
2. Place the neoprene spacer supplied in the installation kit around the endpoint, approximately 1/2 inch (13 mm) from the top of the endpoint.
3. Thread the lock nut on the endpoint until it makes contact with the neoprene spacer.
4. Insert the endpoint into the C-clamp *Figure 14*.
5. Close the C-clamp and lock it in place so that it closes over the neoprene spacer and securely holds the endpoint.

NOTE: ORION radio endpoints perform best with a clear line of sight. Performance varies with installation.

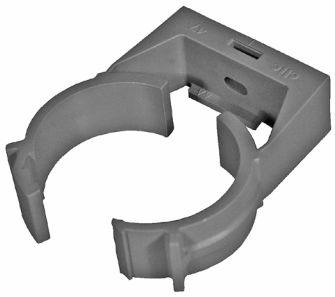

C-Clamp

C-Clamp around endpoint

Figure 14: C-Clamp and placement

64394-003 PIPE INSTALL KIT

For pipe installations, the **Pipe Install Kit (PN: 64394-003)** with mounting support bracket (*Figure 15*) is available. The bracket is designed for use with a 3/8, 5/8 and 1/2 inch rebar or 1/2 inch schedule 40 PVC pipe.

For ORION Cellular endpoints, the kit can be used for indoor and remote installations but should NOT be used under a pit lid.

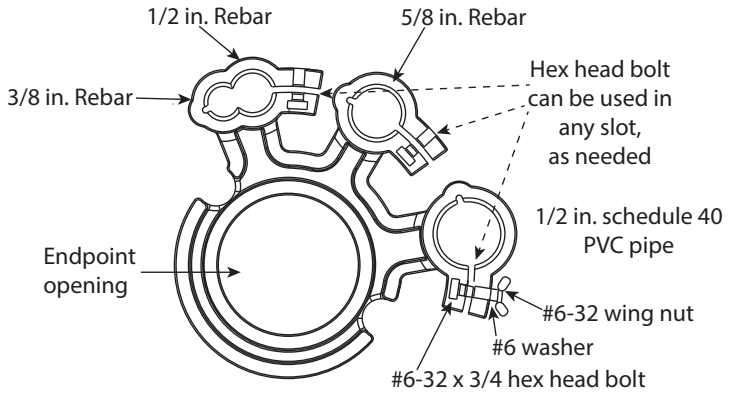

Figure 15: Support bracket (knuckles)

To install an ORION endpoint, follow these steps.

1. Drive rebar/stake into the ground, or use a free-standing pipe or rebar.

⚠CAUTION

DRIVE REBAR OR STAKE INTO THE GROUND PRIOR TO ATTACHING THE ENDPOINT TO AVOID DAMAGE.

2. Slide the mounting support bracket over the rebar/stake/pipe and secure using the enclosed hex head bolt, washer and wing nut provided with the bracket. The hex head bolt fits any slot. See *Figure 15*.

NOTE: The bracket can be installed with either side up, but installing with the smooth side up is recommended if installed outdoors to avoid potential water build up.

3. Insert the threaded end of the endpoint up through the bottom of the bracket opening, thread the lock nut onto the endpoint, and hand tighten the lock nut to secure the bracket.

   NOTE: The bracket can be installed anywhere along the length of the endpoint threaded end, as long as it is below the top 0.5 in. (13 mm) where the endpoint antenna is located.

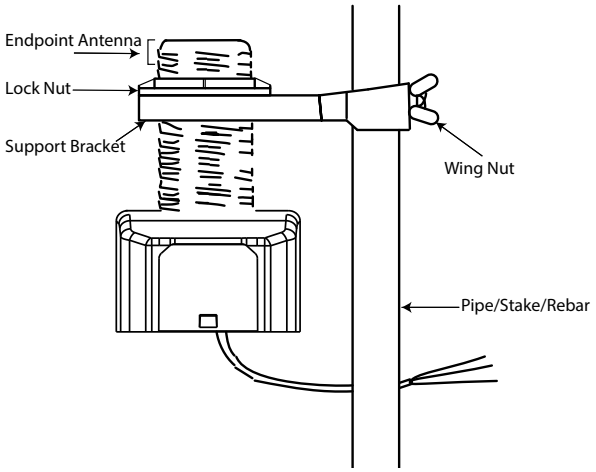

Figure 16: Pipe kit installation

64394-023 COMMERCIAL METER MOUNTING BRACKET INSTALL KIT

The **Commercial Meter Mounting Bracket Install Kit (PN: 64394-023)** is designed for use with most Badger Meter Turbo, Compound Series and Fire Service Disc bypass meter lines. The kit allows you to securely mount an ORION endpoint to a meter.

Before you begin the installation, you will need a torque wrench set and the Mounting Bracket install kit. The kit components are:

Stainless steel mounting bracket	PN: 66360-001
Lock nut	PN: 62825-001

Figure 17: Stainless steel mounting bracket

Figure 18: Lock nut with gussets

To install the bracket, follow these steps:

1. Verify that the water is turned off.
2. Slip the mounting bracket over the endpoint, as shown.

Figure 19: Mounting bracket over endpoint

3. Screw the lock nut from the kit on the threaded section of the endpoint. Hand tighten the lock nut to secure the bracket.

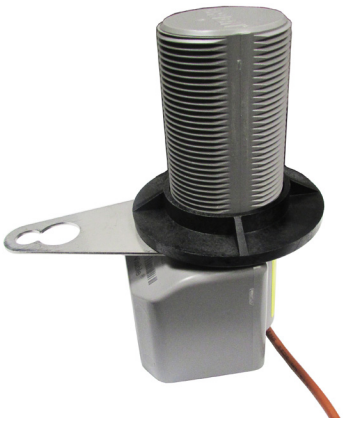

Figure 20: Tighten lock nut

4. At the meter, unscrew the head assembly bolt at the location where you plan to mount the endpoint.
5. Position the bracket, reinsert the bolt and hand tighten it.

   NOTE: For visual clarity, the photo in *Figure 21* shows the bracket attached without the endpoint.

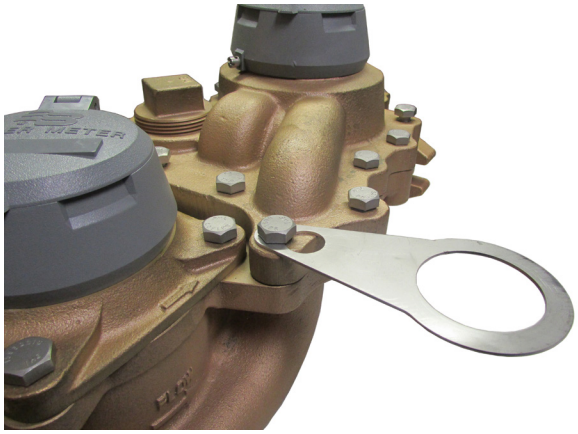

Figure 21: Attached bracket with bolt

6. Position the bracket with the endpoint as far from the meter as possible to provide adequate space for the ORION endpoint signal to propagate.

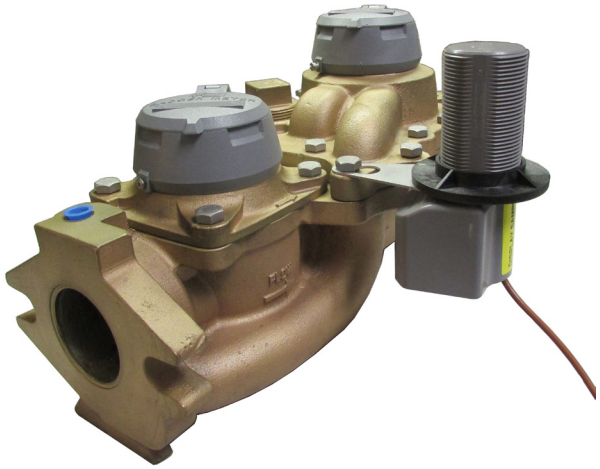

Figure 22: Endpoint connected to meter with bracket

7. With the torque wrench, tighten the casing bolt as indicated in the chart below:

Meter	Ft-lb
2-inch Turbo Series Meter	10.9
3-inch Turbo Series Meter	37.5
4-inch Turbo Series Meter	37.5
6-inch Turbo Series Meter	37.5
2-inch Compound Series Meter	16.7
3-inch Compound Series Meter	33.3
4-inch Compound Series Meter	33.3
6-inch Compound Series Meter	33.3
Heavy Duty Bypass M70	21.0
Heavy Duty Bypass M170	50.0

8. Installation is complete. Turn water back on.

IMPORTANT

If two ORION endpoints are required for a fire series assembly or a compound meter application, the endpoints must be mounted on opposite sides of the meter head assembly.

64394-030 THRU-THE-LID INSTALL KIT

The ADA-compliant **Thru-the-Lid Install Kit (PN: 64394-030)** is designed for use with a NON-METAL PIT LID, 2 inches (51 mm) maximum thickness, and a standard hole diameter of 1-7/8 inches (48 mm).

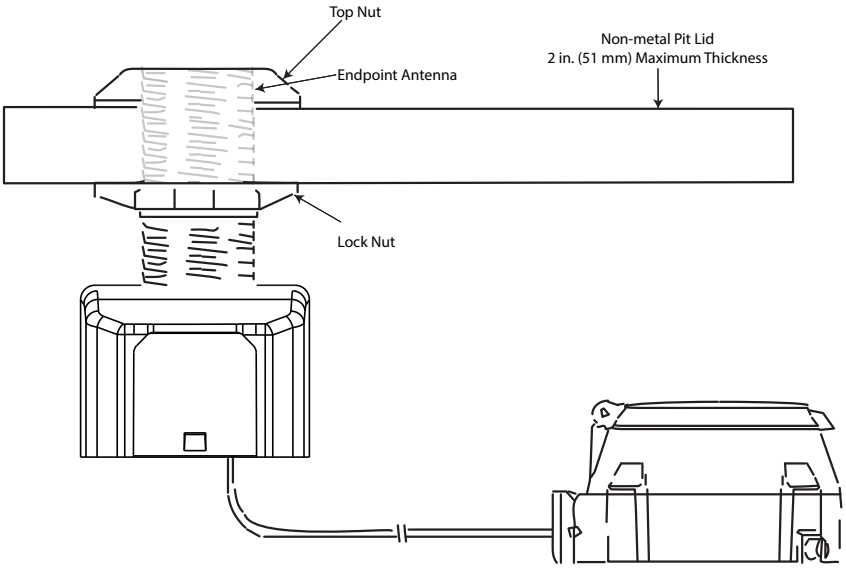

Figure 23: ORION endpoint through pit lid

To install an endpoint through a non-metal pit lid, follow these steps.

1. Screw the lock nut onto the tube threads as shown (large diameter side up).
2. Insert the endpoint tube through the bottom of the lid.
3. Screw the top nut onto the endpoint tube threads as shown.
4. Tighten the lock nut and top nut to make sure the endpoint is secure.

APPENDIX: ENDPOINT STATUS TOOL

BEACON users can check the activation status of ORION Cellular endpoints with the ORION Endpoint Status tool. Several minutes after installation, the tool displays ORION Cellular endpoints assigned to you. Endpoints do not need to be provisioned in BEACON to display.

The browser-based tool can be viewed on a computer or mobile device. An Internet connection is required. Follow these steps to use the ORION Endpoint Status tool.

1. Go to *https://orionstatus.beaconama.net*.
2. Sign in with your BEACON email address and password (*Figure 24*).
   Result: The ORION Endpoint Status screen (Figure 25) opens showing the list of activated Cellular endpoints.

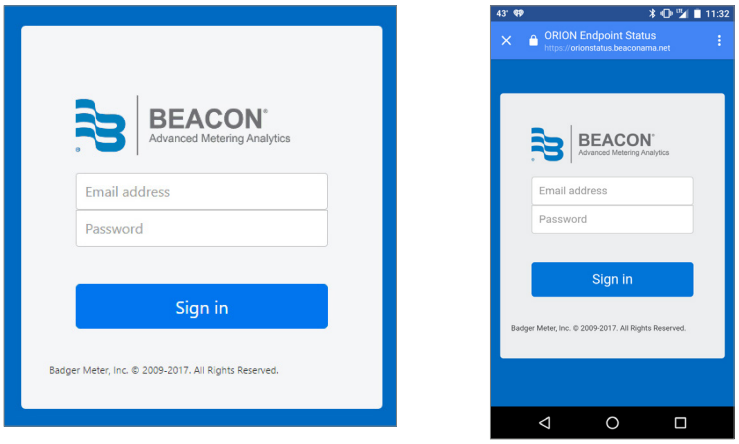

Figure 24: Tool sign in screen - computer and mobile

NOTE: It can take several minutes for a newly installed endpoint to communicate with the cellular network and display on the ORION Endpoint Status screen.

3. View the endpoint list.
   The list displays endpoint serial number, activation time, and activation signal strength. The current endpoint and meter status are also shown. Endpoints are listed according to their activation time, with the most recent endpoint activation times listed first (top of list).

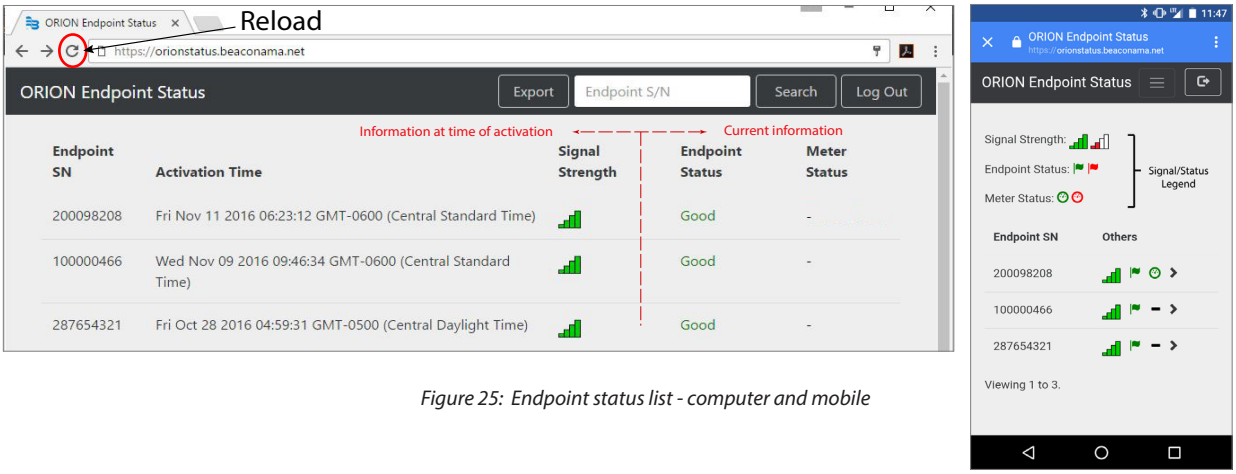

Figure 25: Endpoint status list - computer and mobile

You can also **Export** endpoints into a program such as Excel®, or **Search** to find a specific endpoint.

4. To see any new endpoints that have been added since logging in, reload/refresh the browser window. On a computer, use the reload button at the top left of the screen. On a mobile device, swipe down the screen to refresh.

5. Select an endpoint in the list to see the endpoint raw read. A window opens, like the examples shown in *Figure 26*.

   NOTE: Information in the first three fields is captured at the time of activation. Information in the next three fields is current information.

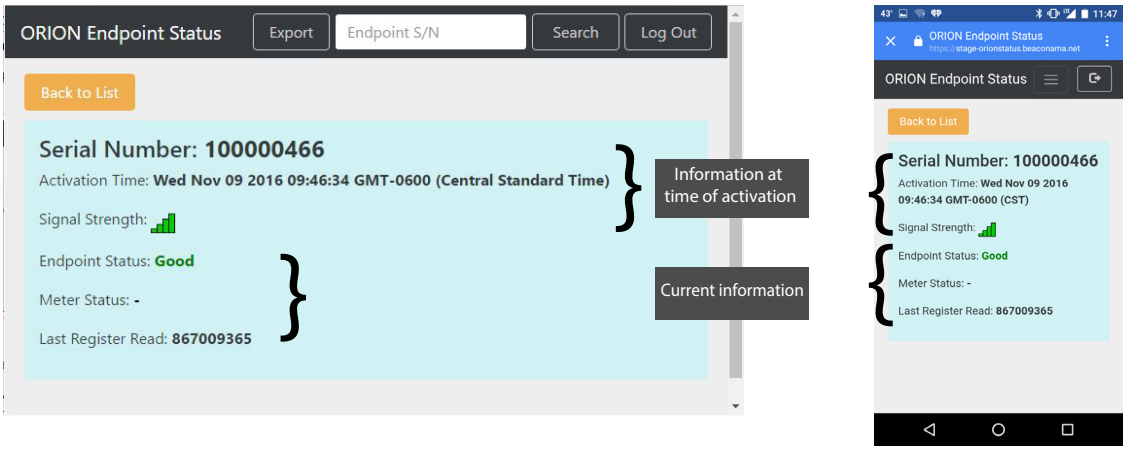

Figure 26: Status detail screen - computer and mobile

The *Endpoint Status* field displays one of the following:

Endpoint Status	Response
Good	No response required.
Endpoint Tamper or Encoder Error	Incomplete information. This message updates at the next scheduled communication.
Endpoint Tamper	Endpoint* requires attention.
Encoder Error	Encoder* requires attention.

*For additional endpoint information, see the *Product Configuration Utility for ORION Endpoints* software manual. For additional encoder information, see the appropriate encoder user manual. All documents are available at *www.badgermeter.com*.

The *Meter Status* field displays one of the following:

NOTE: *Meter Status* only displays for endpoints connected to E-Series Ultrasonic meters. For other meters, the field will have a dash mark (–).

Meter Status	Response
Good	No response required.
Sensor Error	Meter* requires attention.

*For additional information, see the appropriate E-Series Ultrasonic Meter User Manual, available at *www.badgermeter.com*.

6. Tap/click **Back to List** to return to the previous screen.

7. When finished using the tool, tap the **Log Out** button or on a mobile device.

INLINE CONNECTORS

Inline connectors are used to allow AMR/AMI device connectivity without the need for a field splice kit.

There are three available inline connector types: Twist Tight, 308, Nicor.

When ordered as an assembly, the endpoint and encoder (or electronic meter) inline connectors are joined at the factory, prior to shipping.

When ordered separately, inline connectors come with removable caps. Inline connector ends can be joined in the field by the customer after removing the caps. With the proper orientation, the connector ends go together easily. No tools are necessary.

NOTE: Additional removable caps are available for order. Part numbers are listed in *Figure 28, Figure 30* and *Figure 32*.

⚠CAUTION

BEFORE JOINING, MAKE SURE ALL SURFACES OF THE CONNECTOR ENDS ARE CLEAN, DRY, AND FREE OF ANY DEBRIS OR DIRT. THIS STEP IS ESSENTIAL TO MAKE SURE THE CONNECTOR REMAINS WATER TIGHT AND SUBMERSIBLE.

Twist Tight Connector

Twist Tight, caps removed, ends connected

Figure 27: Twist Tight inline connector

To use the Twist Tight connector, follow these steps and refer to *Figure 28*.

1. Remove the protective caps.
   - *Endpoint-side connector:* Twist the rotating collar on the *connector* counter clockwise (left) to loosen and remove the cap.
   - *Encoder-side connector:* Twist the rotating collar on the *protective cap* counter clockwise (left) to loosen and remove the cap.
2. Align the notches inside each connector and push the ends together until the endpoint-side is fully seated in the encoder-side connector.

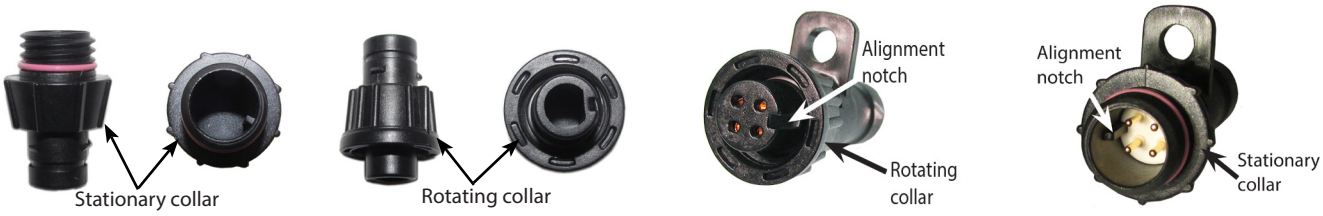

Protective cap endpoint-side PN: 68307-007 | Protective cap encoder-side PN: 68307-008 | Endpoint-side | Encoder-side

Figure 28: Twist Tight connector ends and caps - close up view

3. On the endpoint-side connector, twist the rotating collar clockwise (right) until the ends are tightly connected. When tightly connected, the tabs at the top of the connectors should be aligned and the red O ring on the encoder-side connector should NOT be visible.

IMPORTANT

Do NOT use tools to tighten the connector ends. Hand tighten only.

Twist Tight Extension Harness

An extension harness connects inline between the meter- and endpoint-side connectors. Harnesses in these lead lengths are available with the Twist Tight connector.

Extension Harnesses

Part Number	*Extension Length*
68307-009	5 ft extension
68307-010	10 ft extension

For more information about the Twist Tight connector, refer to the *Twist Tight Inline Connector Assembly Application Data Sheet*, available at *badgermeter.com*.

308 Connector

Figure 29: 308 inline connector

To use the 308 connector, follow these steps and refer to *Figure 30*.

1. Squeeze the notched area and pull to remove the cap(s).
2. Align the notches inside each connector and push the ends together. You will hear a "click" when the connector ends are firmly seated and secure.

Figure 30: 308 connector ends and caps - close up view

For additional information, refer to the *308 Inline Connector Assembly Application Data Sheet*, available at *badgermeter.com*.

Nicor Connector

Figure 31: Nicor inline connector

To use the Nicor connector, follow these steps and refer to *Figure 32*.

1. Pull the cap(s) straight off to remove.
2. Locate the arrow on each connector.
   With the arrows pointed toward each other, push the ends together until the encoder-side connector is fully seated into the endpoint-side connector. There should be no visible gap.

Figure 32: Nicor connector ends and caps - close up view

Nicor Extension Harness

An extension harness connects inline between the meter- and endpoint-side connectors. An extension harness in this lead length is available with the Nicor connector.

Extension Harness

Part Number	*Extension Length*
66488-024	10 ft extension

GEL CAPS TO CONNECT AN ENCODER

For those connections that are not factory wired or equipped with inline connectors, follow these guidelines for using gel caps when splicing is required, either for installation or to fix a connection after a tamper.

Refer to the wiring charts on *page 7*.

NOTE:

- For pit environments, splice connections require a field splice kit (**PN: 62084-001**), which can be ordered separately. Refer to the instructions found in the document, *Field Splice Kit for Badger Meter AMR/AMI Products,* available at *badgermeter.com*.
- For all installations, excess wire should be coiled and cable tied to avoid any damage.

Required Tools

Splicing Tools (Customer Supplied)	**Badger Meter Part Number**	
• Parallel Pliers	59983-001	
• Coax Wire Stripper	59989-001	
• Diagonal Cutting Pliers	n/a	

Connecting an Encoder Using Gel Caps

Follow these steps when using Badger Meter supplied gel caps.

1. To connect an encoder with existing wires to an ORION endpoint, strip approximately 1-1/2 inches (38 mm) of outer insulation sheath from the encoder and endpoint cables using a coax wire stripping tool. We recommend using the Badger Meter Coax Wire Stripper (**PN: 59989-001**).

   ⚠CAUTION

   USE CAUTION WHEN REMOVING THE OUTER SHEATH SO THAT THE INNER SIGNAL WIRE INSULATION IS NOT NICKED OR DAMAGED.

2. Unwind the outer foil shield from the endpoint cable and cut it off even with the outer sheath using diagonal cutting pliers.
3. Connect the ORION endpoint to an approved encoder. Verify the endpoint serial number prior to completing the wiring setup.
   - Connect the encoder cable wires to the ORION endpoint wires using the insulation gel caps provided in the installation kit. Refer to the chart on *page 8* to determine which wires need to be connected to complete the installation.

     NOTE: The terminal posts and wire colors may not match.

     ⚠CAUTION

     DO NOT STRIP ANY INSULATION FROM THE ENDS OF THE WIRES BEFORE YOU PUSH THEM INTO THE GEL CAP.

   - Insert the wires from each cable end as far as possible into the gel cap. See *Figure 33: Wires in gel cap*.

Figure 33: Wires in gel cap

- Using a crimping tool such as the Badger Meter Parallel Pliers (**PN: 59983-001**), place the gel cap with the wires into the jaws of the crimping tool.

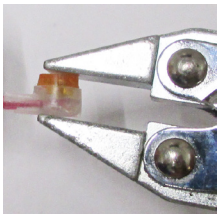

Figure 34: Gel cap in crimping tool

- Crimp the gel cap by squeezing the crimping tool handles until the gel cap is completely compressed. The Badger Meter Parallel Pliers is designed to apply just enough pressure to crimp the gel cap. Apply pressure for three seconds.

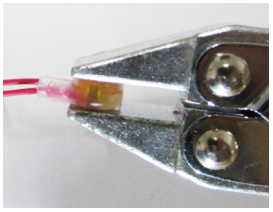

Figure 35: Compress the gel cap

- Repeat the crimping procedure for the remaining wires and gel caps.

4. Attach the two plastic cable ties and tighten securely for strain relief. Snip off the excess cable tie with the wire cutter.
5. For remote installations, the connection is complete.

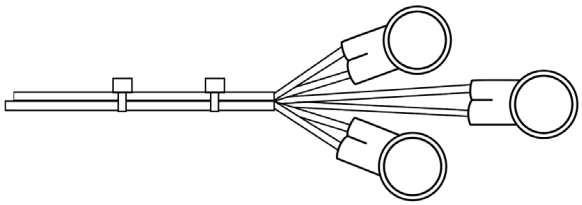

Figure 36: Cable tie attachment locations

NOTE: For pit installations, an appropriate field splice kit should be used. If using the Badger Meter Field Splice Kit, refer to the *Field Splice Kit Application Data Sheet* provided with the kit.

Testing Wire Connections

Test all wiring connections to confirm connectivity, and to verify the ORION endpoint reading and the encoder reading are the same. The connections can be tested using the Quick Read function with either an ORION handheld or mobile data collector. See the appropriate software manual, available at *badgermeter.com*, for more information.

INTENTIONAL BLANK PAGE

SMART WATER IS *BADGER METER*

BEACON and ORION are registered trademarks of Badger Meter, Inc. Other trademarks appearing in this document are the property of their respective entities. Due to continuous research, product improvements and enhancements, Badger Meter reserves the right to change product or system specifications without notice, except to the extent an outstanding contractual obligation exists. © 2023 Badger Meter, Inc. All rights reserved.

www.badgermeter.com