Preso®
Differential Pressure Flow Meters

Ellipse® Pitot Tube Meter

AHL-GD Differential Pressure Flow Meter

Badger Meter

PTT-UM-00327-EN-03 (August 2021)

User Manual

CONTENTS

Introduction. 3

Specifications 3

Pipe Orientation and Sensor Mounting 4

Installation Instructions, Single Support 5

Installation Instructions, Double Support 6

Location Instructions 7

Flow Curve 8

INTRODUCTION

The Preso patented elliptical design outperforms and provides greater accuracy than traditional differential pressure flow measurement devices. This differential pressure flow meter is designed with a series of ports facing the upstream velocity pressures, as well as flow sensing ports strategically located ahead of the trailing edge flow separation.

The multi-ported, self-averaging flow element consists of an elliptical shape with two independent flow sensing chambers. The impact velocity sensing holes (high pressure) are located along the leading edge and the true static sensing holes (low pressure) are on the exterior probe side. Model AHL-GD comes with instrument shutoff valves with provisions to accept a transmitter or direct indicating meter.

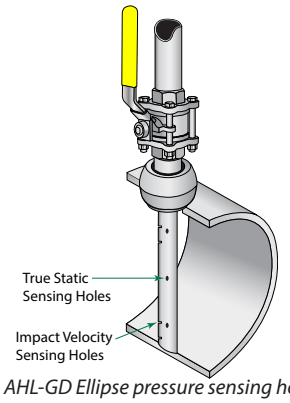

Figure 1: AHL-GD Ellipse pressure sensing holes

SPECIFICATIONS

Applications	Air, liquids and gases
Pipe Sizes	2…72 in. (50…1829 mm)
Pressure	800 psi (5515 kPa) maximum
Temperature	800° F (426° C) maximum
Accuracy	±0.75% of reading
Turndown Ratio	17:1 with no vacuum effect
Standard Components	T-type head, 316 SS 1/4 in. or 1/2 in. FNPT connection CS 3000 lb. thread fitting, ASTM A105 316/316L SS Ellipse sensor Instrument valves (2 per sensor), 1/4 in. or 1/2 in., CS 316 SS ID tag with wire 150 lb. 316/316L SS sensor flange CS packing chamber with molythane or graphite packing gland CS packing chamber flange, 150 lb. with SS cap 316 SS isolation ball valve, NPT threaded CS threaded nuts and bolts CS nipples, schedule 40
Reynolds Number	Greater than 75,000 maintains most accurate flow measurements Less than 75,000 consult factory for estimated results
Resonance	Less than 0.8 but greater than 1.2. If greater than 0.8, use double support. System shutdown is required when the double support option is used. Select larger diameter ellipse to avoid double support.

Table 1: AHL-GD specifications

PIPE ORIENTATION AND SENSOR MOUNTING

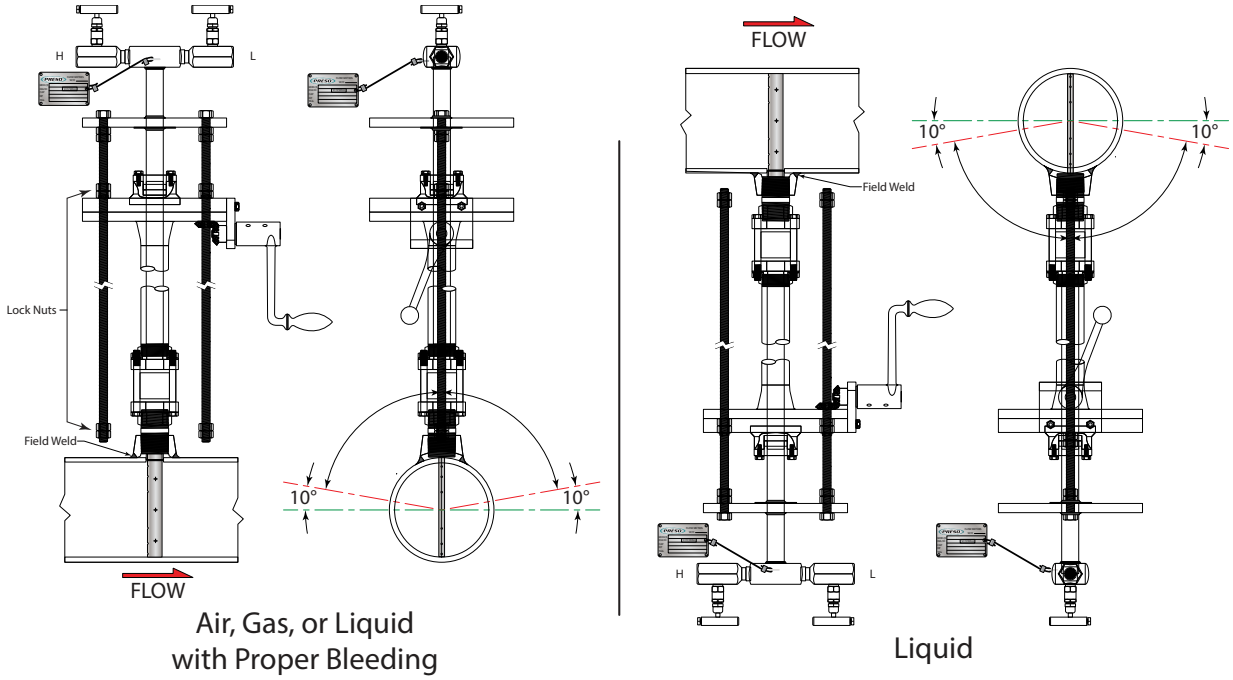

Figure 2: Horizontal pipe installation

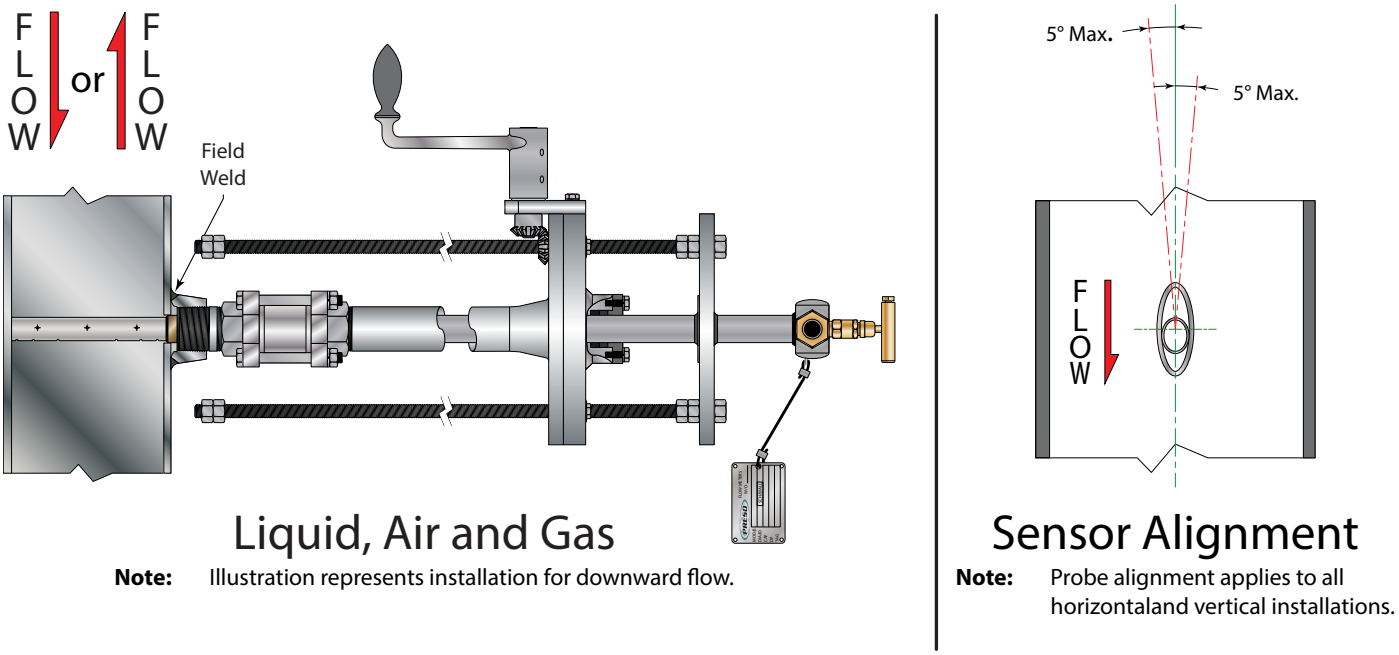

Figure 3: Vertical pipe installation and sensor alignment

INSTALLATION INSTRUCTIONS, SINGLE SUPPORT

1. Choose the proper location to install the AHL-GD Differential Pressure Flow Meter using AGA/ASME standards (or equivalent). Refer to the location diagrams *Figure 2*, *Figure 5* and *Figure 6*.
2. Grind the surface of the pipe where the AHL-GD Differential Pressure Flow Meter is to be inserted to provide a clean area for welding.
3. Weld the supplied thread-o-let to the pipe using standard codes for your application (1/16 in. weld gap recommended). Take care to protect the threads during the welding process.
4. Install the close nipple by threading it into the weld connector. Next, install the supplied 3-piece isolating ball valve.
5. Mount the high pressure drilling machine onto the ball valve. Open the ball valve. Drill a hole through the pipe wall according to *Table 2*.

Model/Sensor	Weld Connector	Drill Bit
AHL-GD (7⁄8 in.)	1-1/4 in.	1-1⁄8 in.
AHL-GD (1-1/4 in.)	1-1/2 in.	1-3⁄8 in.

Table 2: Single support drill bit size

NOTE: There is no need for a drilling machine if it is not a hot tap installation or if the system is not pressurized.

6. Having drilled through the pipe, withdraw the drill bit through the isolating ball valve. Once the drill bit has been withdrawn, close the ball valve and dismantle the drilling machine. Ensure that there is no leakage at the valve and close nipple connections. The ball valve is to remain completely closed until step 9.
7. Install the cage nipple assembly and packing gland with the threaded rods assembly by threading it into the isolating ball valve. Align the arrow on the sensor head with the direction of flow. See *Figure 4* and *Figure 5*.
8. Install the instrument valves (optional) at the pressure connections located on the AHL-GD Differential Pressure Flow Meter sensor head. Ensure that the valves are fully closed before proceeding.

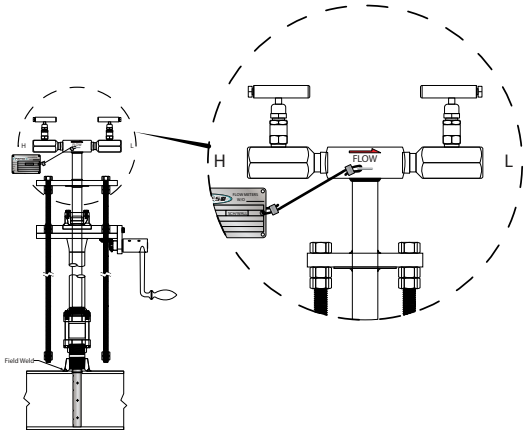

Figure 4: Flow indication arrow

9. Open the isolating ball valve. Insert the AHL-GD Differential Pressure Flow Meter sensor into the pipe until it reaches the opposite pipe wall. This should be done by turning the threaded insertion rods clockwise using a wrench.
10. Connect the instrument lines to the sensor head valves. In turn, connect these lines to a gage or transmitter.

INSTALLATION INSTRUCTIONS, DOUBLE SUPPORT

1. Follow steps 1 through 6 in the single support section. At 180° from and on the same plane as the previously drilled hole, grind the surface of the pipe to provide a clean area for welding. Drill a hole and de-burr, especially on the inside of the pipe. The hole used for the double support should be sized according to *Table 3*.

Model/Sensor	Weld Connector	Drill Bit
AHL-GD (7⁄8 in.)	1/8 in.	3/8 in.
AHL-GD(1-1/4 in.)	1 in.	7⁄8 in.

Table 3: Double support drill bit size

2. Weld the double support thread-o-let making sure that it is centered with the drilled hole (1/16 in. weld gap recommended).
3. Install the AHL-GD Differential Pressure Flow Meter sensor through the two holes. Make sure that the double support pin passes through the guide ring. See *Figure 5*.

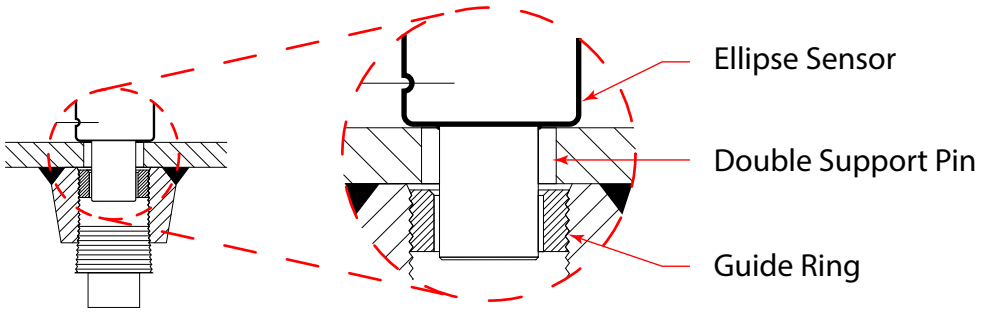

Figure 5: Double support installation

4. Align the arrow located on the sensor head in the direction of flow as shown in *Figure 4*.
5. Ensure that the AHL-GD Differential Pressure Flow Meter is in the correct orientation and spans the inside of the pipe. Tighten the threaded insertion rods until the sensor reaches the other end of the pipe.
6. Install the plug into the end of the double support thread-o-let. Tighten the plug to prevent leakage.

LOCATION INSTRUCTIONS

Accuracy is affected by the piping configurations due to the disturbances of the flow profile. A fully developed symmetrical flow profile is achieved with the minimum upstream and downstream recommended lengths.

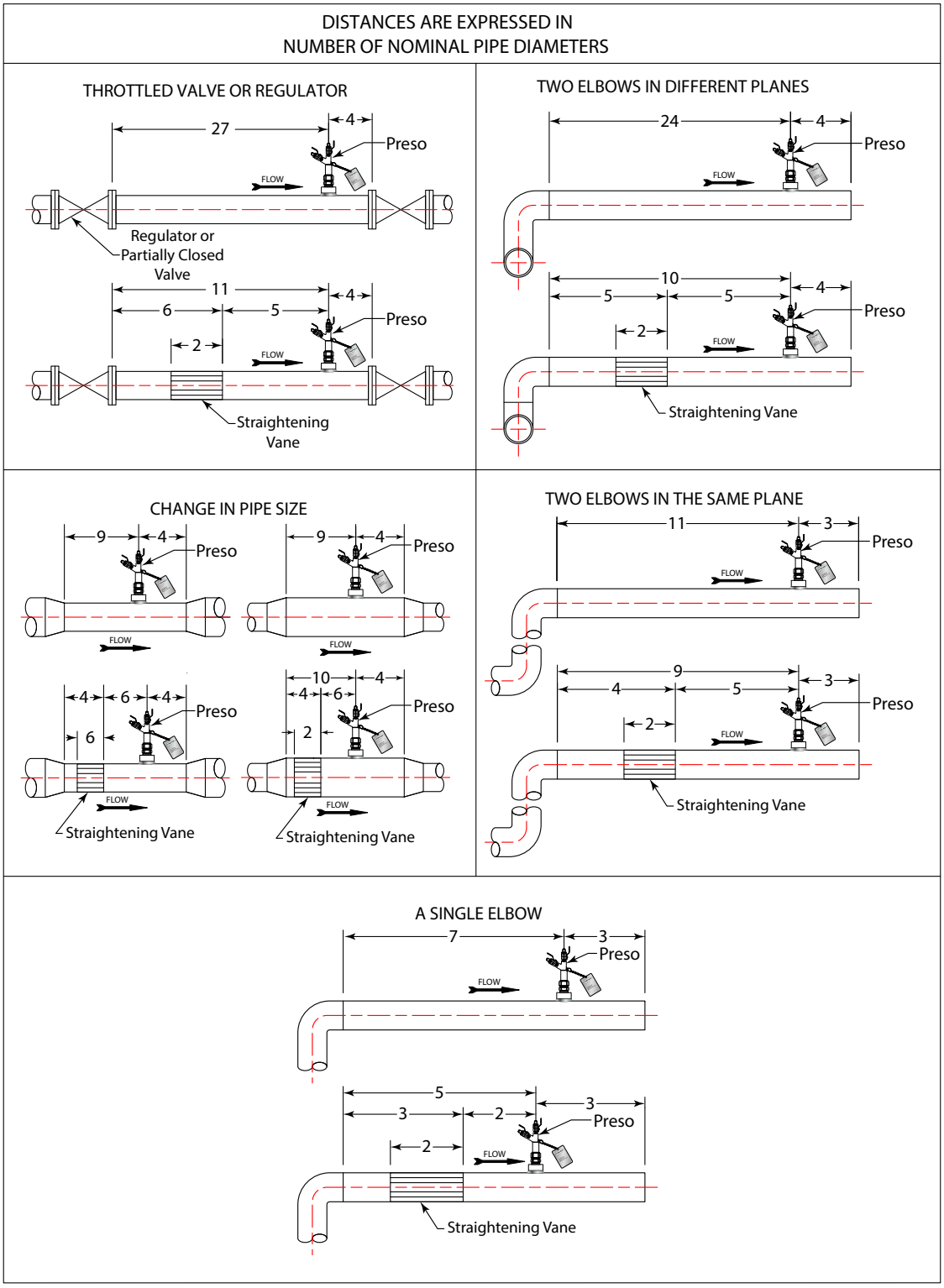

Figure 6: Location instructions

FLOW CURVE

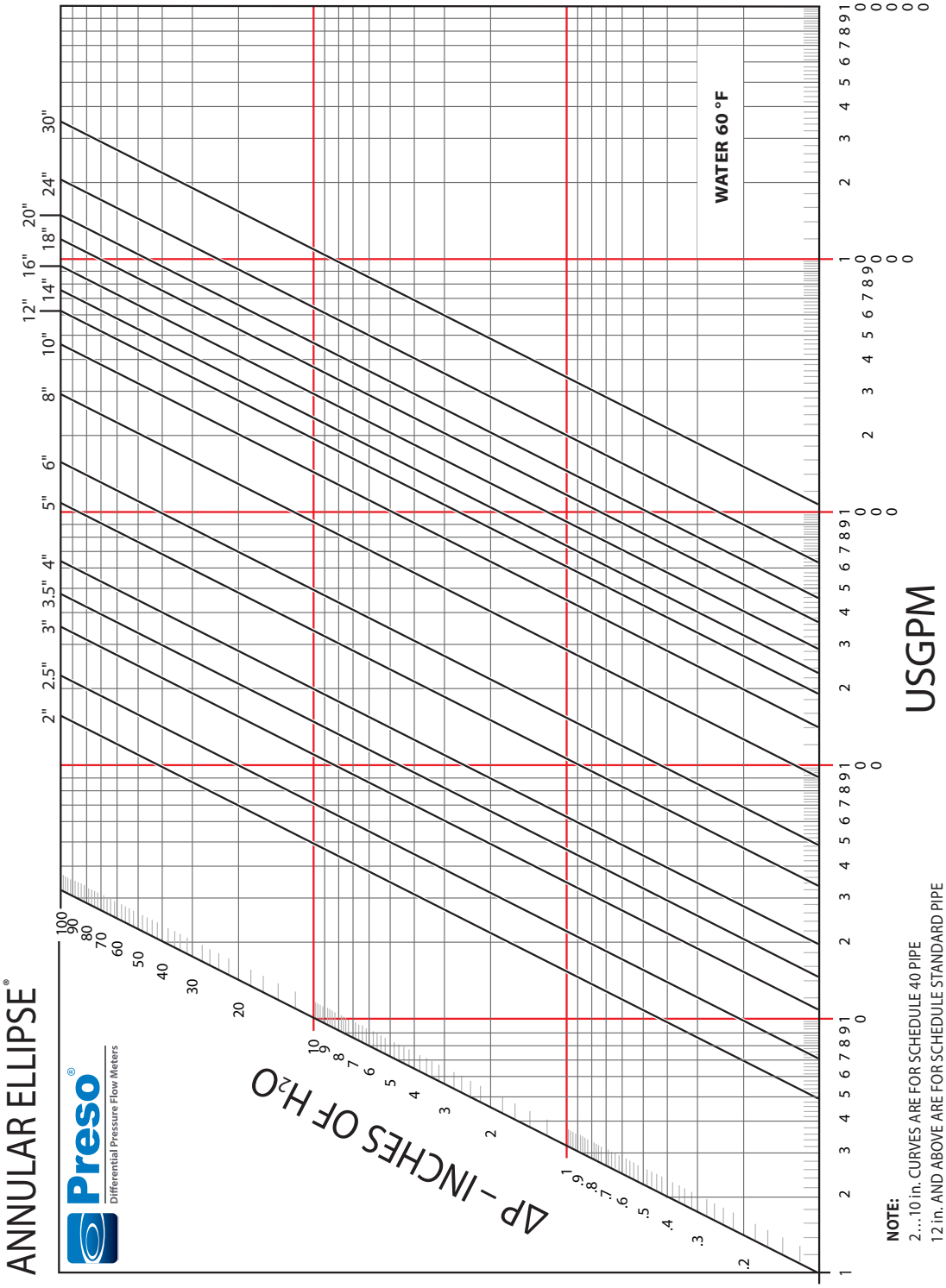

Figure 7: Pressure drops

Control. Manage. Optimize.

Preso is a registered trademark of Badger Meter, Inc. Other trademarks appearing in this document are the property of their respective entities. Due to continuous research, product improvements and enhancements, Badger Meter reserves the right to change product or system specifications without notice, except to the extent an outstanding contractual obligation exists. © 2021 Badger Meter, Inc. All rights reserved.

www.badgermeter.com