RCV
Research Control® | ReCo® Valves

# High Pressure and Severe Service Valves

## Type 1711

Badger Meter

RCV-UM-00596-EN-03 (February 2021)

# User Manual

# CONTENTS

Safety Precautions . . . . . 3
Unpacking & Inspection . . . . . 3
Description . . . . . 4
Adjusting Spring Force . . . . . 4
Orientation . . . . . 4
Removing the Valve for Service. . . . . 5
Reassembling the Valve . . . . . 10
Parts Drawings . . . . . 15

# SAFETY PRECAUTIONS

Neither Badger Meter® nor any Badger Meter affiliated entities assumes responsibility for the selection, use, and maintenance of any products. Responsibility for the selection, use and maintenance remains with the purchaser and end-user.

**⚠CAUTION**

- ***PERSONAL INJURY OR PROPERTY DAMAGE CAUSED BY SUDDEN RELEASE OF PRESSURE OR BURSTING OF PRESSURE RETAINING PARTS MAY RESULT IF SERVICE CONDITIONS EXCEED THOSE FOR WHICH THE PRODUCT WAS INTENDED. TO AVOID INJURY OR DAMAGE, PROVIDE RELIEF VALVE OVER PRESSURE PROTECTION AS REQUIRED BY GOVERNMENT OR ACCEPTED INDUSTRY CODES.***
- ***ALWAYS WEAR PROTECTIVE GLOVES, CLOTHING, AND EYE WEAR WHEN PERFORMING ANY INSTALLATION OPERATIONS TO AVOID PERSONAL INJURIES.***
- ***THIS VALVE IS INTENDED FOR A SPECIFIC RANGE OF TEMPERATURES AND PRESSURES. APPLICATION OF DIFFERENT TEMPERATURES THAN THOSE SPECIFIED COULD RESULT IN PARTS DAMAGE, VALVE MALFUNCTION, OR LOSS OF CONTROL OF THE PROCESS.***
- ***DO NOT REMOVE THE ACTUATOR FROM THE VALVE WHILE THE VALVE IS STILL PRESSURIZED.***
- ***DISCONNECT ANY OPERATING LINES PROVIDING AIR PRESSURE, ELECTRIC POWER, OR CONTROL SIGNAL TO THE ACTUATOR OR ACCESSORIES.***
- ***USE BYPASS VALVES OR COMPLETELY SHUT OFF THE PROCESS LINE TO ISOLATE THE VALVE FROM PROCESS PRESSURE. RELIEVE PROCESS PRESSURE AND DRAIN PROCESS MEDIA FROM BOTH SIDES OF THE VALVE.***
- ***CONSULT A TRAINED SAFETY ENGINEER FOR ANY ADDITIONAL MEASURES THAT MUST BE TAKEN TO PROTECT AGAINST PROCESS MEDIA.***

# UNPACKING & INSPECTION

Upon opening the shipping container, visually inspect the product and applicable accessories for any physical damage such as scratches, loose or broken parts, or any other sign of damage that may have occurred during shipment.

**NOTE:** If damage is found, request an inspection by the carrier's agent within 48 hours of delivery and file a claim with the carrier. A claim for equipment damage in transit is the sole responsibility of the purchaser.

# DESCRIPTION

The Type 1711 valve is supplied with a 35 sq. in. actuator, which can be either Air-to-Open (ATO) or Air-to-Close (ATC). Due to the weight of the actuator, external support is required for the valve. The actuator must be supported with external brackets and must be mounted to a suitable surface for total valve weight support.

## Adjusting Spring Force

If the unit is ATO, the instrument signal (3…15 psi, 6…30 psi) should be piped into the *lower* pressure case using a 1/4" NPT fitting. To seal the connection, use pipe dope or PTFE paste on the fitting threads. The upper case will have a black plastic vent plug installed. It is best to leave it in place.

Although spring loading is normally factory adjusted, should spring force need to be increased:

1. Calculate the required amount of preload by multiplying the innervalve's orifice area by the shutoff pressure and dividing by 34. This indicates the *air preload setting*.
   Example: 1000 psi shutoff × 0.197 sq. in. = 5.8 (rounded up to 6.0)
2. To adjust, simply apply 6 psi to the lower pressure case. The stem will rise (be sure it is safe for the valve to open by shutting off upstream pressure).
3. Using a backup wrench on the flats on the actuator stem, loosen the adjustor lock nut.
4. Rotate the adjustor counterclockwise until the innervalve seats. Then, tighten the stem lock nut.

The preload is now set.

If the unit is ATC, the instrument signal should be piped into the *upper* case. The lower case will have the vent fitting. If the valve is not closing against incoming pressure (and the valve is equipped with a positioner), simply increase the supply pressure to the positioner until shutoff is achieved.

In the ATC configuration, the springs simply open the valve and do not assist in valve closure.

Although the actuator can provide long service life without maintenance, occasionally repairs are necessary. In that case, contact the factory and we will supply you with actuator disassembly instructions.

The size 35 actuator is field-reversible. If you need to reverse the action of your actuator, contact the factory for instructions.

If the unit is factory equipped with a positioner or other accessories, it is normal procedure to include any instructions that come with the accessories in the plastic bag with the valve.

- DO NOT rotate the actuator on the bonnet if the innervalve is seated. The innervalve will be damaged.
- DO brace the actuator if using in a vibration or shock situation.
- DO NOT expect the valve (with throttling innervalve) to shut off completely. Normal innervalve leakage class is ANSI Class IV.

## Orientation

Standard orientation is with the valve stem and actuator in a vertical plane and the process fluid entering the valve from the bottom and discharging through the side in a horizontal plane.

The valve body must be installed such that the outlet connection flow is horizontal or slightly tilted down, away from the valve body. Failure to properly install the valve will result in improper draining.

Other orientations may be chosen if internal drainage is not critical.

**⚠WARNING**

***PERSONAL INJURY OR PROPERTY DAMAGE MAY OCCUR IF THE VALVE IS NOT PROPERLY MOUNTED AND SUPPORTED.***

# REMOVING THE VALVE FOR SERVICE

1. In order to service the valve, first make sure all pressure (both upstream and downstream of the valve) is relieved.
2. Applicable for Air-to-Open. Using a manually operated regulator applied to the actuator or positioner, stroke the valve upward to approximately 75% travel. This lifts the innervalve off the seat, to prevent damage to the innervalve seating
3. Place a wrench on the adjustor to keep it from turning. With a wrench on the innervalve lock nut, loosen the lock nut, and unthread the innervalve stem out of the adjustor.
4. Loosen and remove, the yoke lock nut.
5. Lift the actuator off the valve body/bonnet assembly.

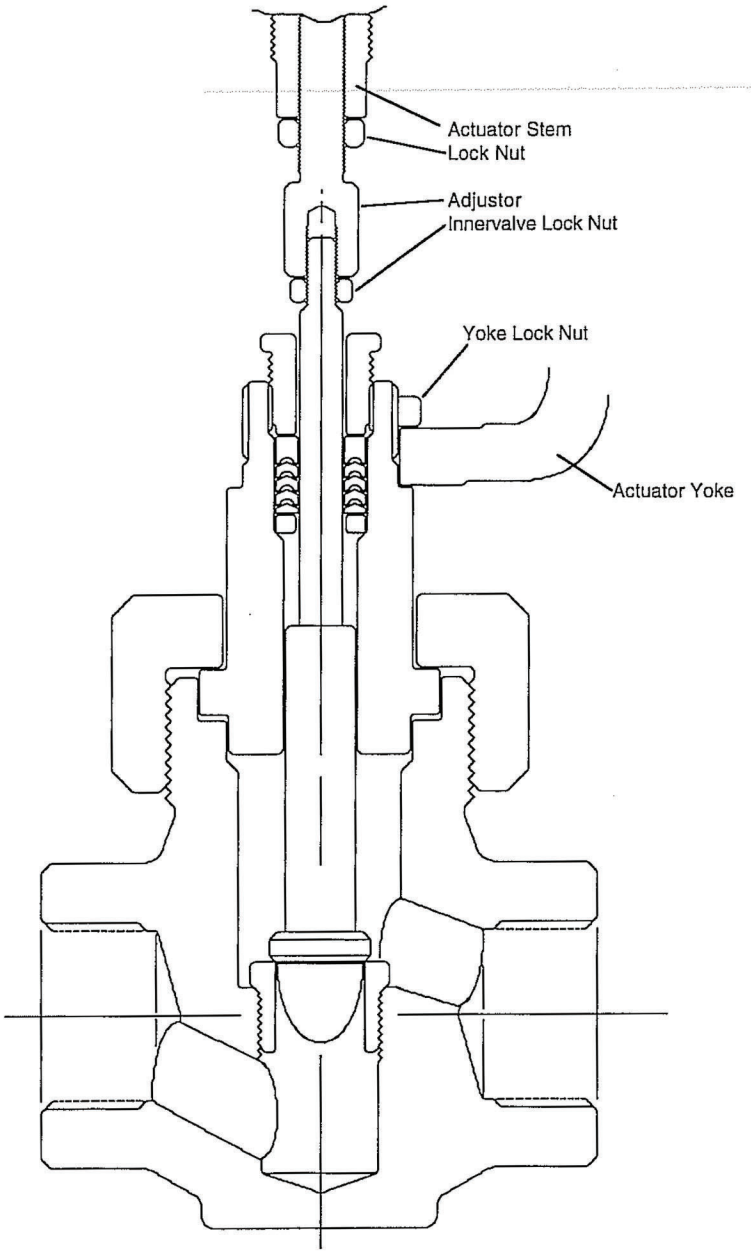

6. Clamp the valve body in a heavy duty vise.

**NOTE:** Position the valve body in the vise with the ends of the body touching the vise jaws, as indicated by the black arrows on the sketch. Do not clamp on the sides of the body or the hex ends of the body, unless the body has welded-in fittings or pipe. In that case, it is ok to clamp on the hex ends.

7. Using a large adjustable wrench (Crescent® type), loosen and remove the Union Nut. DO NOT use a pipe wrench.

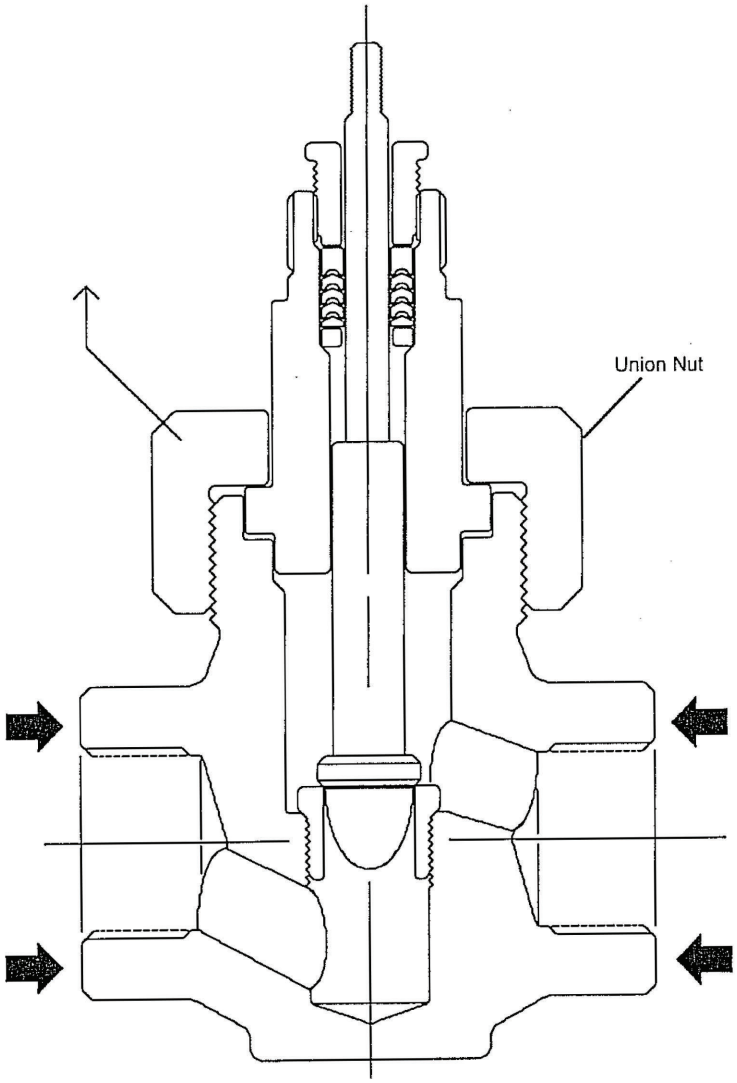


8. Before loosening the packing gland, pull the innervalve up to full travel.
9. Carefully, with leather- or rubber-gloved hand, pull the bonnet straight up.

**NOTE:** Slight rotation of the bonnet might be required to break loose the gasket as it may be slightly stuck to the graphite gasket.

To preclude galling:

- Do not pry or cock bonnet in the body guide.
- Do not use pliers or pipe wrench to loosen.

If the bonnet does not loosen by hand, wrap the bonnet (in the area indicated by the double-arrows) with thick rubber or leather and use a pair of large channel-lock pliers to grasp and twist the bonnet.

**NOTE:** Once loosened by this method, remove the bonnet by hand.

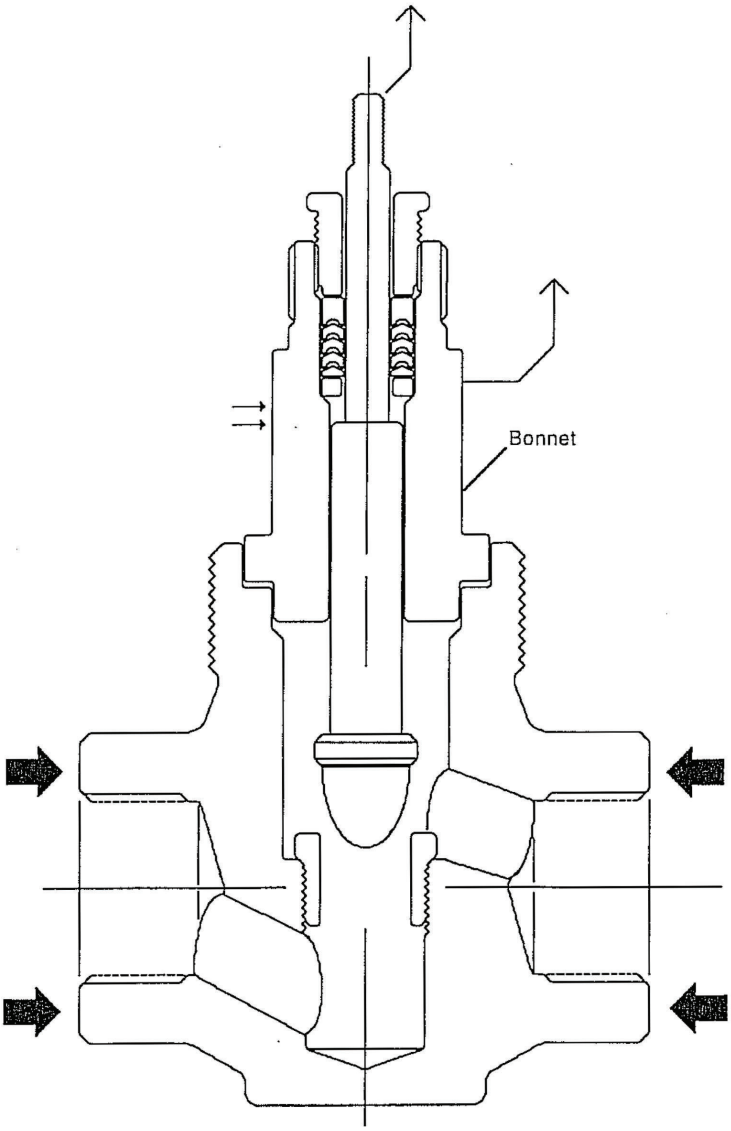


**NOTE:** The 1711 series of valves uses 2 gaskets per valve. If only one gasket is used, proper compression and seal will not be made.

Although new gaskets are recommended, under some conditions, the old gasket might serve well.

10. Check to see if the graphite gasket surface is damaged. If the gasket material is stuck to the bonnet, or if torn, replace with new gaskets.

    If replacing gaskets, use a soft metal or plastic tool to remove all the graphite from the bonnet and body cavity. Then, using a brass or SST brush, with solvent, remove remaining pieces of the gasket and dry.

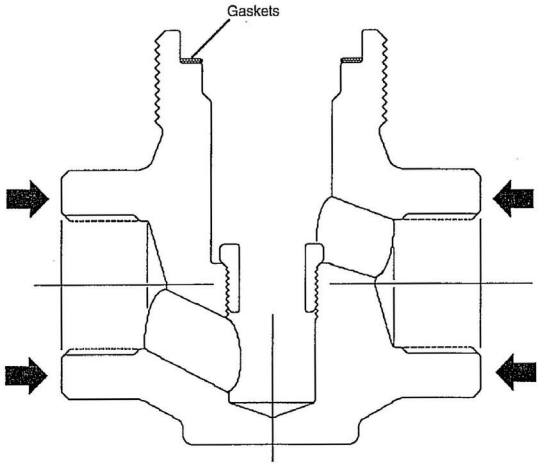


11. Remove the seat from the body and clean the body of debris. If you already have new components, it is normally best to leave the body in the vise. To remove the seat, use a deep, thin-walled socket in the following sizes:

- 1/2 in. Valve: 5/8 in. hex
- 3/4 in. Valve: 3/4 in. hex
- 1 in. Valve: 15/16 in.hex

If replacing the innervalve and the old innervalve is still usable, place the old innervalve set in the tube and re-mark the proper information on the tube.

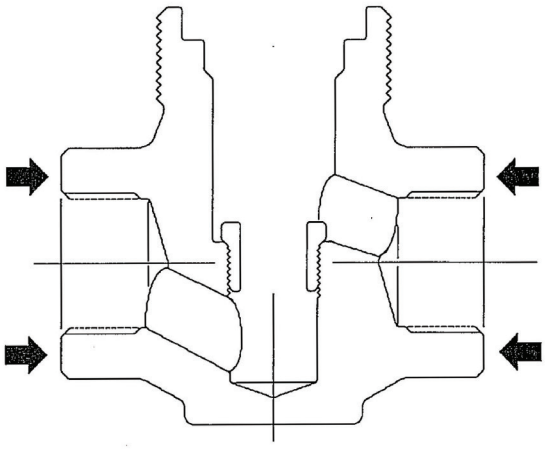

12. Loosen the packing gland and pull the innervalve out the bottom of the bonnet.

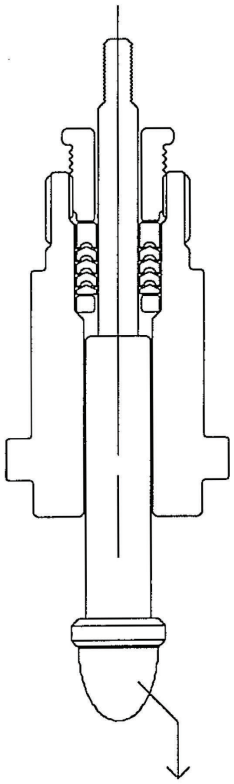

13. Remove the packing gland.
14. Using a wooden or plastic dowel slightly smaller than 1/2 in., insert it into the bottom of the bonnet as shown.
15. Holding the bonnet in one hand, place the dowel on a hard surface and push the packing and SST ring out the top of the bonnet.
16. Inspect the bonnet for damage and clean it in solvent.

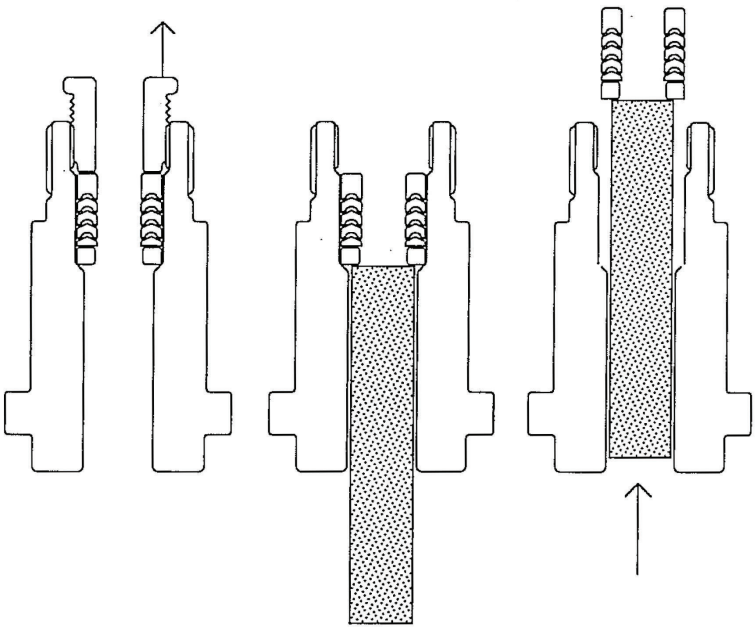

# REASSEMBLING THE VALVE

1. Using an acceptable grease, lightly coat the stem and the guide area of the NEW innervalve and insert it up through the bonnet.
2. Place these items onto the stem, in this order:
   a. The SST bottom ring (it is uni-directional)
   b. The bottom TFE adapter, cone up
   c. Three V-rings, cup down/cone up
   d. The top TFE follower, cup down/flat end up
3. Lubricate the threads of the gland. Using the packing gland as a pusher, push the packing down into the bonnet until the threads of the gland make contact with the threads in the bonnet. Then thread the gland into the bonnet until hand tight.
4. Tighten the gland a little at a time until you feel packing friction (light dragging) on the innervalve stem as you stroke it up and down by hand, then stop. Further tightening or adjustment should be made after the valve is assembled.

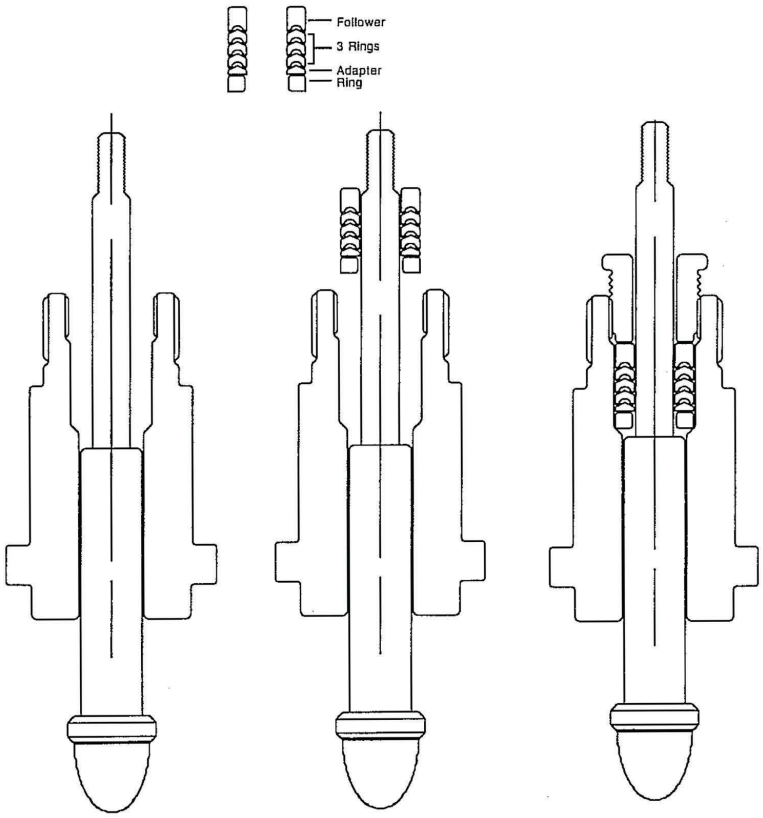

5. Remove the new seat from the shipping tube and carefully start it into the body. Once started, use the socket to tighten the seat in the body to the following torque values:

- 1/2 in. Valve > 30…35 lb-ft
- 3/4 in. Valve > 35…40 lb-ft
- 1 in. Valve > 40…45 lb-ft

Although new seats come with graphite lubricant painted on the threads, a light amount of pipe dope can be used on the threads and seating angle, if desired.

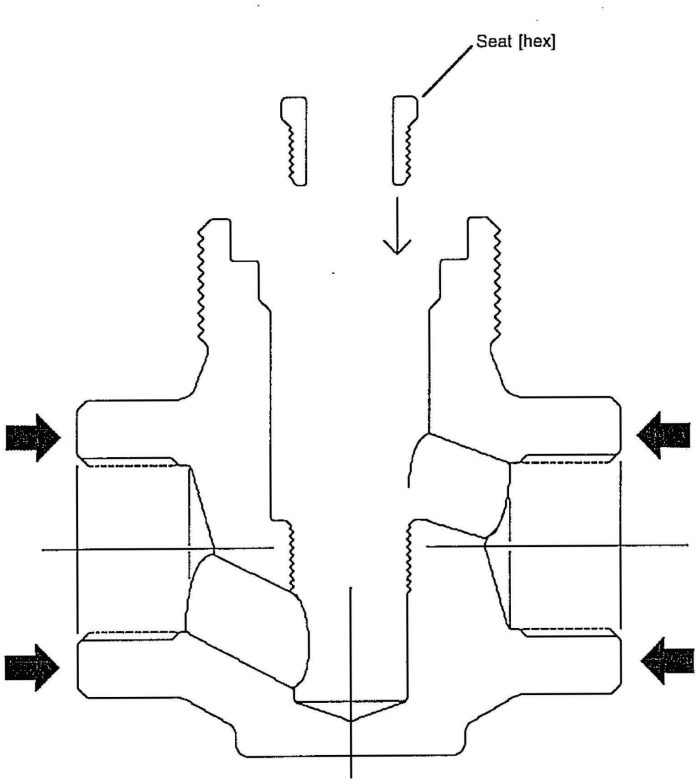

6. Place 2 new graphite gaskets into the gasket cavity of the boy. Be careful, they are brittle.
7. Lubricate the guide areas of the bonnet.
8. With the innervalve still pulled up, carefully lower the bonnet into the body until it seats against the gasket. Rotate the bonnet a very slight amount to make sure it is "squared" in the body and onto the gasket.

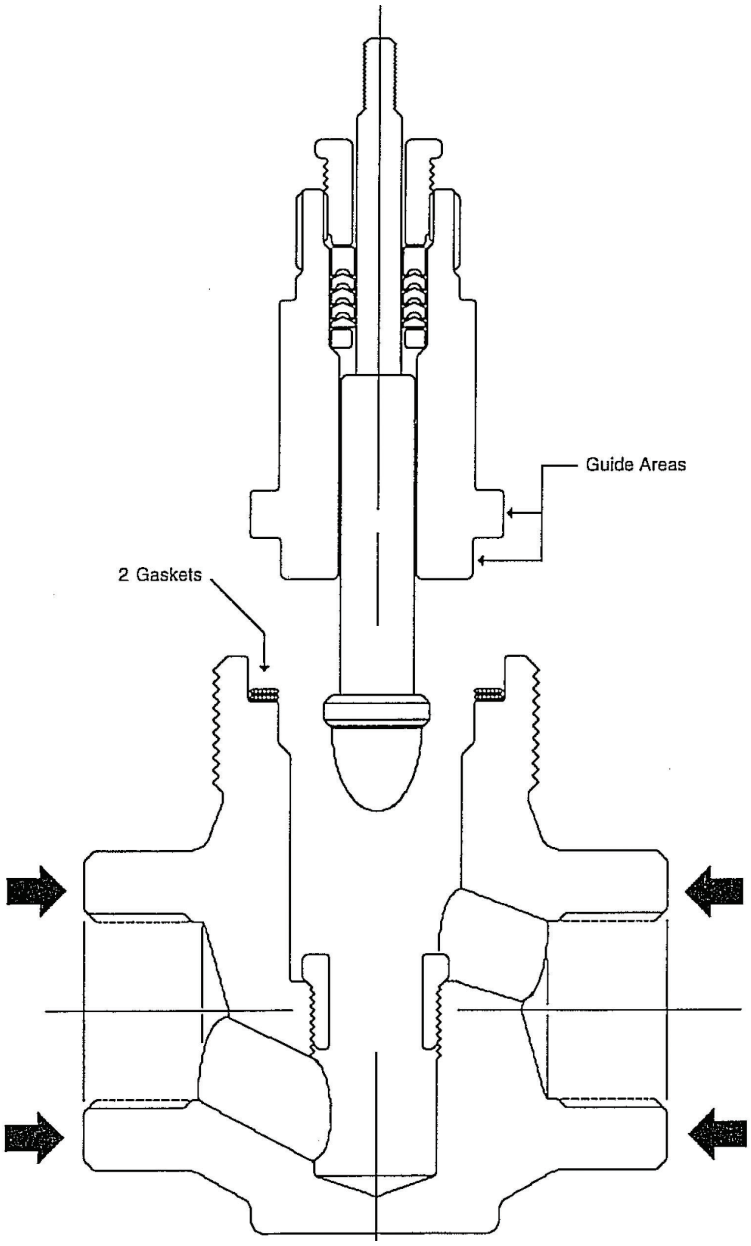

9. Lubricate the threads of the union nut and thread it onto the body. Torque to the following:

- 1/2 in. Valves > 300 lb-ft
- 3/4 in. Valves > 300 lb-ft
- 1 in. Valves > 500 lb-ft

**NOTE:** The valve design is rated for the maximum pressure indicated in the Product Data Sheet, only if the union nut is properly installed. If a torque wrench is not available, you can tighten the nut with an adjustable wrench and test for leaks. Re-tighten if leakage occurs. Perform leak testing of the gasket at a pressure slightly above the process pressure but DO NOT exceed the pressure ratings shown in the Product Data Sheet.

10. With the stem still in the up position, thread the1/4-28 innervalve jam nut onto the innervalve (to the bottom of the threads).

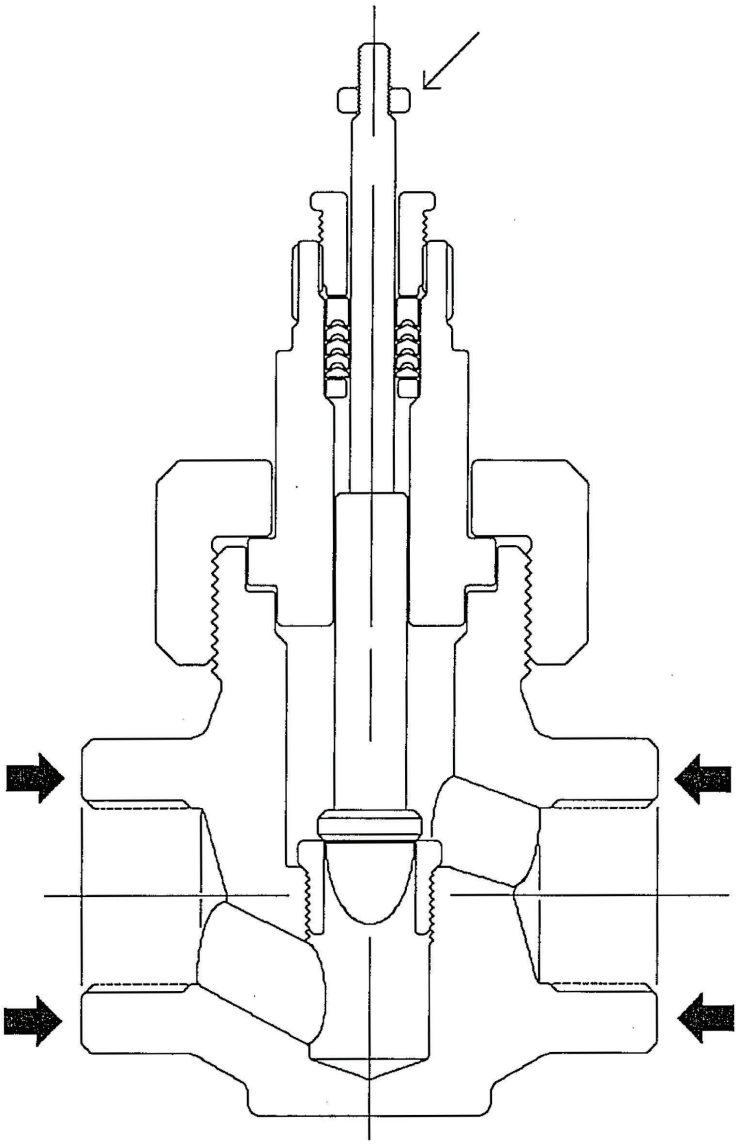

11. With air on the ATO actuator, carefully set the actuator onto the bonnet (be sure to slip the yoke lock nut over the stem).
12. Orient the actuator and tighten the yoke lock nut.
13. Thread the innervalve stem into the adjustor until it stops. DO NOT use the pliers on the stem. Using a back-up wrench on the adjustor, tighten the innervalve lock nut (jam nut).
14. Re-connect any accessories and make necessary adjustments.
15. Test packing for leaks, tightening only enough to stop leakage. Overtightening can damage packing.
16. Check that stroke is 9/16 in. (14 mm).

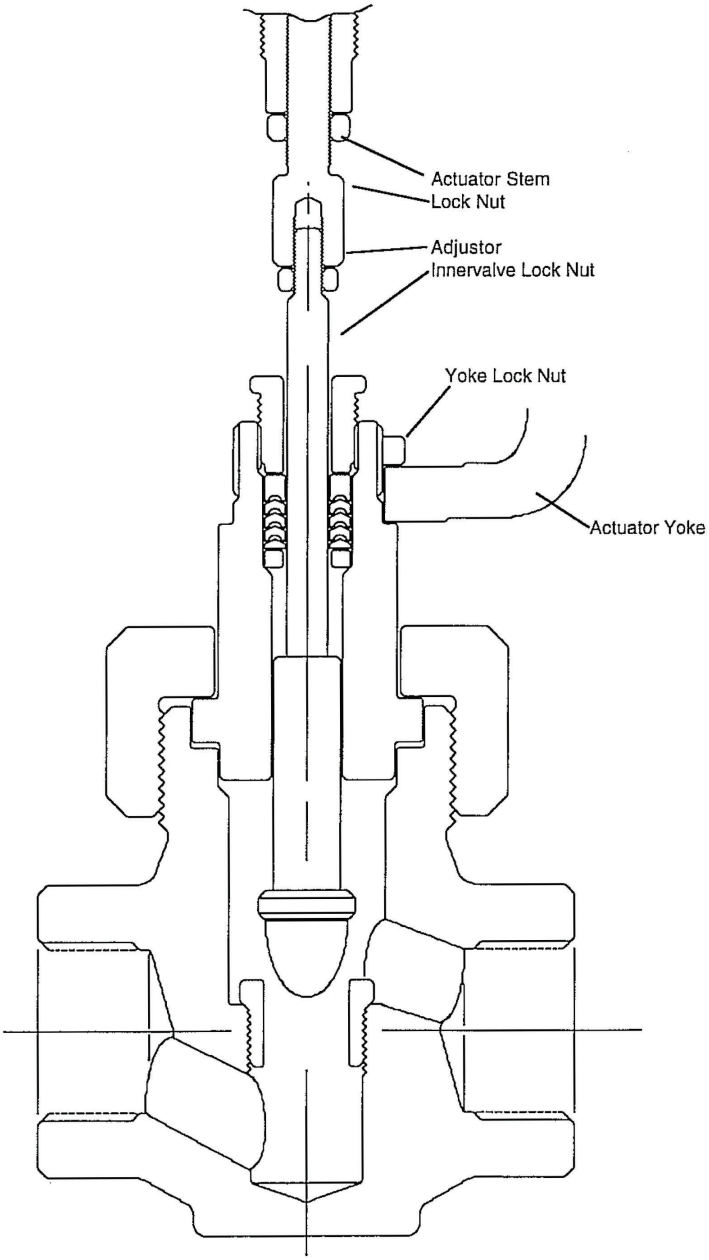

# PARTS DRAWINGS

| DWG NO. | ISSUE | ISS | CHANGE | BY | DATE |
|---|---|---|---|---|---|
| CD-951709 | 01.03 | 01.02 | REDRAW, RCV #120 | GAP | 01-27-99 |
| | | 01.03 | CL. W. ADD TYPE 1711, ITEM 7 526896 WAS 526903 | GAP | 05-11-99 |

UNLESS OTHERWISE SPECIFIED DIMENSIONS FOR REFERENCE ONLY LENGTH UNITS ARE INCHES

ALL PROPRIETARY RIGHTS IN THE SUBJECT MATTER SHOWN ON THIS DRAWING ARE THE EXCLUSIVE PROPERTY OF BADGER METER INCORPORATED.

NOTES:

1.) TRIM ASSEMBLY P/N _____
SIZE: _____ CV: _____ CHAR: _____

2.) NOMINAL STROKE: .562

3.) RECOMMENDED SPARE PARTS ARE:
ITEMS 8 (PACKING SET) & 5 (GASKETS)
OPTIONAL SPARE PARTS ARE:
ITEMS 3 (TRIM SET)

4.) WHEN ORDERING SPARE OR REPLACEMENT PARTS, PROVIDE FACTORY THE VALVE ASSEMBLY SERIAL NUMBER FROM THE NAMEPLATE ON THE ACTUATOR.

PARTS & MATERIAL LIST

QUANTITIES ARE FOR ONE (1) UNIT ONLY

| ITEM NO. | PART NO. | QTY | DESCRIPTION | MATERIAL |
|---|---|---|---|---|
| 1 | 526897-00 | 1 | BODY | |
| 2 | 525949-00 | 1 | BONNET | |
| 3a | SEE NOTE 1 | 1 | INNERVALVE | |
| 3b | SEE NOTE 1 | 1 | SEAT | |
| 4 | 525944-0001 | 1 | LOCKNUT | 300 SERIES SST |
| 5 | 512711-0001 | 2 | GASKET | GRAFOIL |
| 6 | 525951-00 | 1 | ADAPTOR | |
| 7 | 526896-00 | 1 | UNION NUT | |
| 8 | 543242-00 | 1 | PACKING SET | |
| 9 | 525950-00 | 1 | GLAND | |

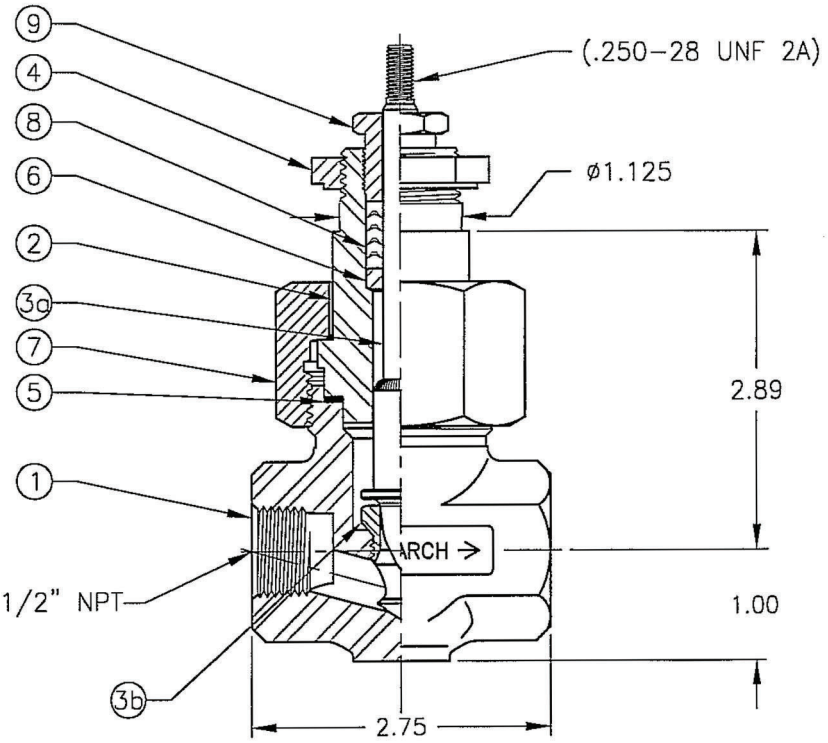


CERTIFIED FOR: _____
P.O. : _____
LOCATION: _____
SERIAL NO.: _____
TAG NUMBER: _____
PREPARED BY: _____ DATE: _____

BADGER METER
RESEARCH CONTROL® VALVES

1/2" GLOBE BODY/BONNET ASS'Y
UNION GASKET JOINT, .312 GUIDED TRIM-
TYPE 1711

| SIZE | SCALE | DWG. NO. | ISSUE |
|---|---|---|---|
| A | 3/4 | CD-951709 | 01.03 |

| DWG NO. | ISSUE | ISS | CHANGE | BY | DATE |
|---|---|---|---|---|---|
| CD-951710 | 01.03 | 01.02 | REDRAW, RCV #120 | GAP | 01-27-99 |
| | | 01.03 | CL #, ADD TYPE 1711, ITEM 7 526898 WAS 526901 | GAP | 05-11-99 |

UNLESS OTHERWISE SPECIFIED DIMENSIONS FOR REFERENCE ONLY LENGTH UNITS ARE INCHES

ALL PROPRIETARY RIGHTS IN THE SUBJECT MATTER SHOWN ON THIS DRAWING ARE THE EXCLUSIVE PROPERTY OF BADGER METER INCORPORATED.

NOTES:

1.) TRIM ASSEMBLY P/N _____
SIZE: _____ CV: _____ CHAR: _____

2.) NOMINAL STROKE: .562

3.) RECOMMENDED SPARE PARTS ARE:
ITEMS 8 (PACKING SET) & 5 (GASKETS)

OPTIONAL SPARE PARTS ARE:
ITEMS 3 (TRIM SET)

4.) WHEN ORDERING SPARE OR REPLACEMENT PARTS, PROVIDE FACTORY THE VALVE ASSEMBLY SERIAL NUMBER FROM THE NAMEPLATE ON THE ACTUATOR.

PARTS & MATERIAL LIST

QUANTITIES ARE FOR ONE (1) UNIT ONLY

| ITEM NO. | PART NO. | QTY | DESCRIPTION | MATERIAL |
|---|---|---|---|---|
| 1 | 526907-00 | 1 | BODY | |
| 2 | 525949-00 | 1 | BONNET | |
| 3a | SEE NOTE 1 | 1 | INNERVALVE | |
| 3b | SEE NOTE 1 | 1 | SEAT | |
| 4 | 525944-0001 | 1 | LOCKNUT | 300 SERIES SST |
| 5 | 512711-0001 | 2 | GASKET | GRAFOIL |
| 6 | 525951-00 | 1 | ADAPTOR | |
| 7 | 526896-00 | 1 | UNION NUT | |
| 8 | 543242-0001 | 1 | PACKING SET | |
| 9 | 525950-00 | 1 | GLAND | |

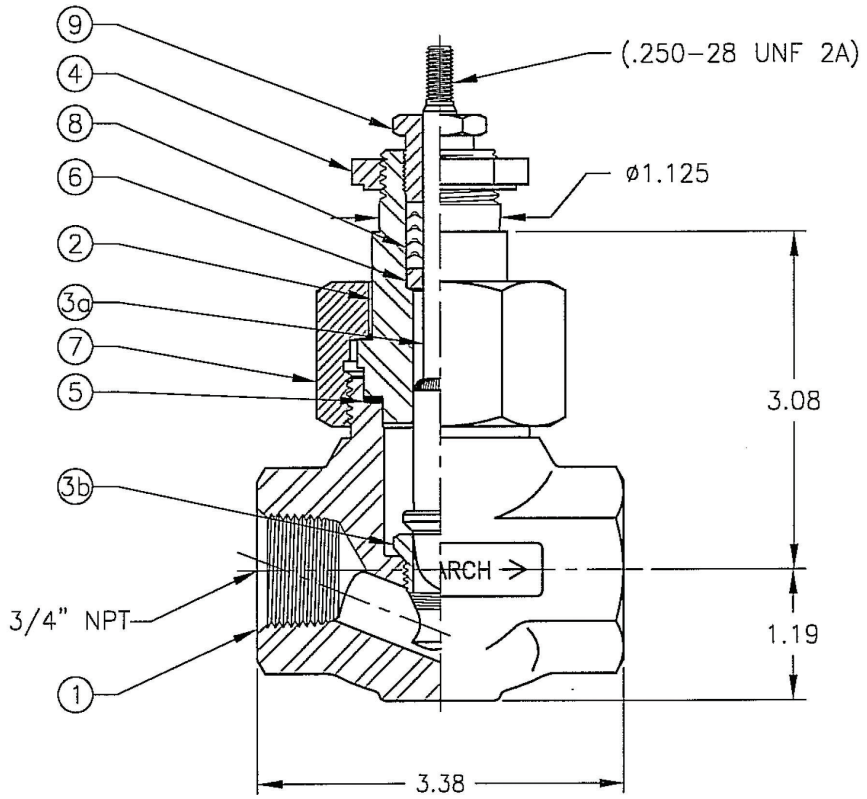


CERTIFIED FOR: _____
P.O. : _____
LOCATION: _____
SERIAL NO.: _____
TAG NUMBER: _____
PREPARED BY: _____ DATE: _____

BADGER METER
RESEARCH CONTROL® VALVES

3/4" GLOBE BODY/BONNET ASS'Y
UNION GASKET JOINT, .312 GUIDED TRIM-
TYPE 1711

| SIZE | SCALE | DWG. NO. | ISSUE |
|---|---|---|---|
| A | 3/4 | CD-951710 | 01.03 |

| DWG NO. | ISSUE | ISS | CHANGE | BY | DATE |
|---|---|---|---|---|---|
| CD-951711 | 01.03 | 01.02 | REDRAW, RCV #120 | GAP | 01-27-99 |
| | | 01.03 | CL III, ADD 1/2", 3/4" | GAP | 04-14-99 |

UNLESS OTHERWISE SPECIFIED DIMENSIONS FOR REFERENCE ONLY LENGTH UNITS ARE INCHES

ALL PROPRIETARY RIGHTS IN THE SUBJECT MATTER SHOWN ON THIS DRAWING ARE THE EXCLUSIVE PROPERTY OF BADGER METER INCORPORATED.

DIMENSIONS

| Ps | A | B | C |
|---|---|---|---|
| 1/2" | 2.75 | 1.00 | 2.89 |
| 3/4" | 3.38 | 1.19 | 3.08 |
| 1" | 4.00 | 1.50 | 3.72 |

PARTS & MATERIAL LIST

QUANTITIES ARE FOR ONE (1) UNIT ONLY

| ITEM NO | 1/2" PART NO | 3/4" PART NO | 1" PART NO | QTY | DESCRIPTION | MATERIAL |
|---|---|---|---|---|---|---|
| 1 | 526897-00 | 526907-00 | 526904-00 | 1 | BODY | |
| 2 | 525949-00 | 525949-00 | 526152-00 | 1 | BONNET | |
| 3a | SEE NOTE 1 | SEE NOTE 1 | SEE NOTE 1 | 1 | INNERVALVE | |
| 3b | SEE NOTE 1 | SEE NOTE 1 | SEE NOTE 1 | 1 | STEAM | |
| 4 | 525944-00 | 525944-00 | 525944-00 | 1 | LOCKNUT | |
| 5 | 512711-0001 | 512711-0001 | 512702-0001 | 2 | GASKET | GRAFOIL |
| 6 | 525951-00 | 525951-00 | 525951-00 | 1 | ADAPTOR PKG | |
| 7 | 526896-00 | 526896-00 | 526903-00 | 1 | UNION NUT | |
| 8 | 543242-00 | 543242-00 | 543242-00 | 1 | PACKING SET | |
| 9 | 525950-00 | 525950-00 | 525950-00 | 1 | GLAND | |
| 10a | 500458-0024 | 500458-0024 | 500458-0024 | 1 | LUBRICANT | N/A |

NOTES:

1.) TRIM ASSEMBLY P/N _____
SIZE: _____ CV: _____ CHAR: _____

2.) NOMINAL STROKE: .562

3.) RECOMMENDED SPARE PARTS ARE:
ITEMS 8 (PACKING SET) & 5 (GASKETS)
OPTIONAL SPARE PARTS ARE:
ITEMS 3 (TRIM SET)

4.) WHEN ORDERING SPARE OR REPLACEMENT PARTS, PROVIDE FACTORY THE VALVE ASSEMBLY SERIAL NUMBER FROM THE NAMEPLATE ON THE ACTUATOR.

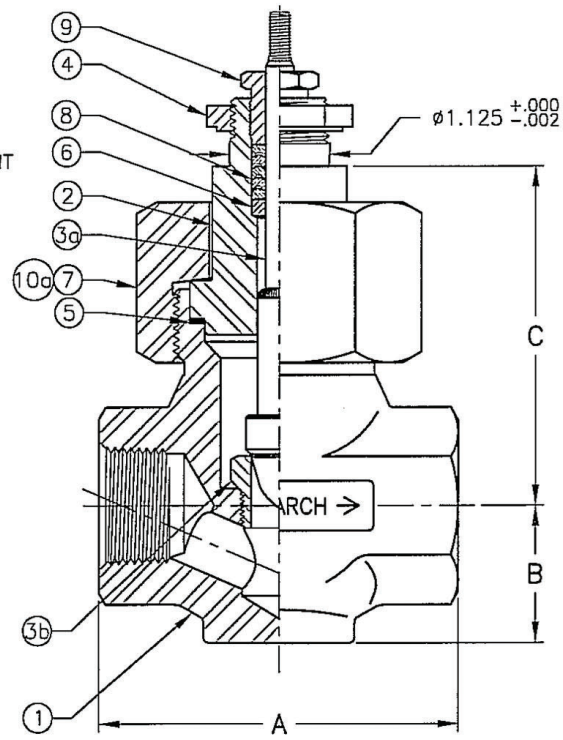


CERTIFIED FOR: _____
P.O. : _____
LOCATION: _____
SERIAL NO.: _____
TAG NUMBER: _____
PREPARED BY: _____ DATE: _____

**BADGER METER**
**RESEARCH CONTROL® VALVES**

1/2", 3/4', 1" HP CAST GLOBE BODY UNION GASKET JOINT, STANDARD BONNET, .312 GUIDED TRIM, CV PACKING

| SIZE | SCALE | DWG. NO. | ISSUE |
|---|---|---|---|
| A | 5/8 | CD-951711 | 01.03 |

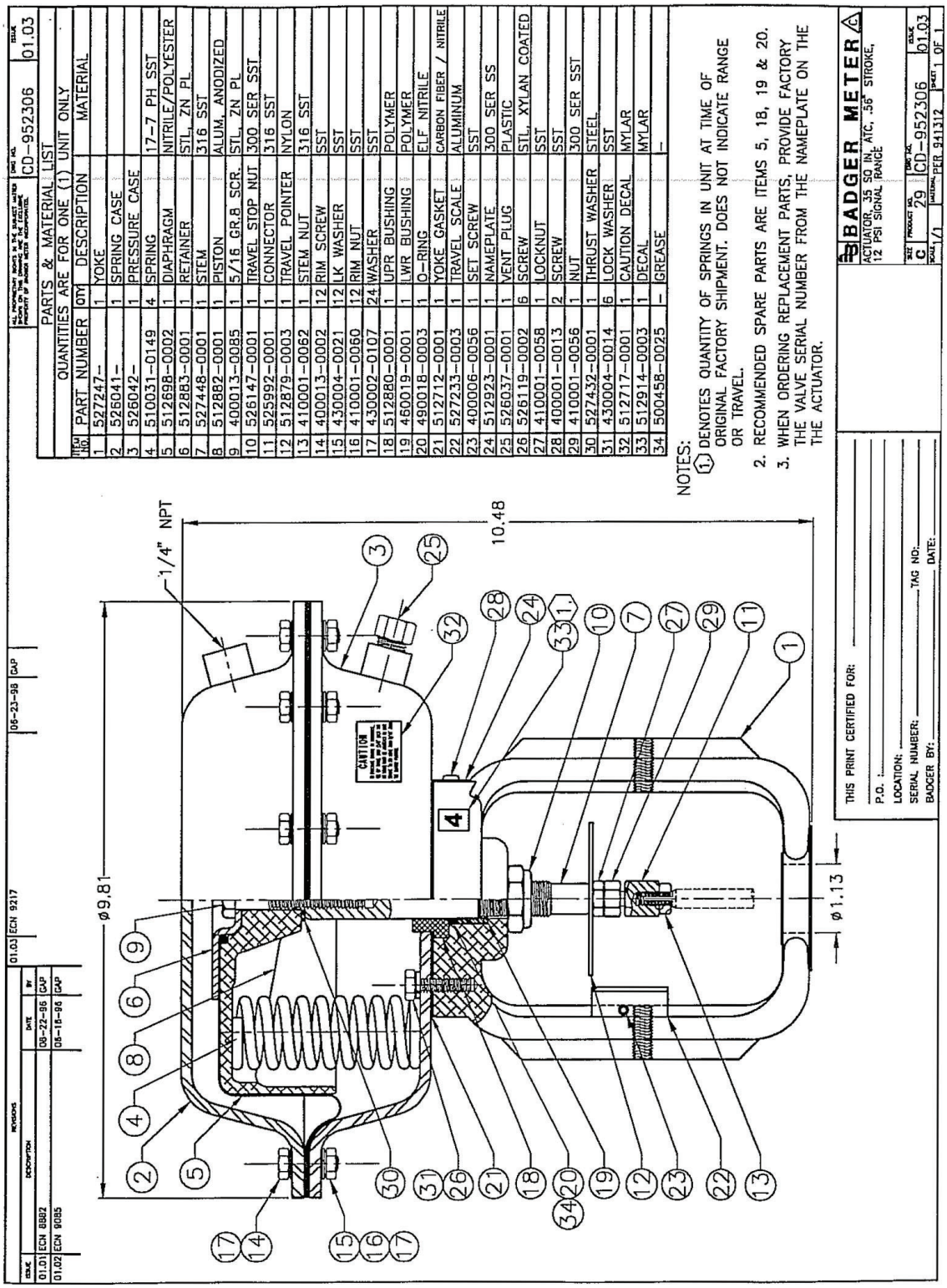


| ITEM NO. | PART NUMBER | QTY | DESCRIPTION | MATERIAL |
|---|---|---|---|---|
| 1 | 527247– | 1 | YOKE | |
| 2 | 526041– | 1 | SPRING CASE | |
| 3 | 526042– | 1 | PRESSURE CASE | |
| 4 | 510031–0149 | 4 | SPRING | 17–7 PH SST |
| 5 | 512698–0002 | 1 | DIAPHRAGM | NITRILE/POLYESTER |
| 6 | 512883–0001 | 1 | RETAINER | STL, ZN PL |
| 7 | 527448–0001 | 1 | STEM | 316 SST |
| 8 | 512882–0001 | 1 | PISTON | ALUM, ANODIZED |
| 9 | 400013–0085 | 1 | 5/16 GR.8 SCR. | STL, ZN PL |
| 10 | 526147–0001 | 1 | TRAVEL STOP NUT | 300 SER SST |
| 11 | 525992–0001 | 1 | CONNECTOR | 316 SST |
| 12 | 512879–0003 | 1 | TRAVEL POINTER | NYLON |
| 13 | 410001–0062 | 1 | STEM NUT | 316 SST |
| 14 | 400013–0002 | 12 | RIM SCREW | SST |
| 15 | 430004–0021 | 12 | LK WASHER | SST |
| 16 | 410001–0060 | 12 | RIM NUT | SST |
| 17 | 430002–0107 | 24 | WASHER | SST |
| 18 | 512880–0001 | 1 | UPR BUSHING | POLYMER |
| 19 | 460019–0001 | 1 | LWR BUSHING | POLYMER |
| 20 | 490018–0003 | 1 | O–RING | ELF NITRILE |
| 21 | 512712–0001 | 1 | YOKE GASKET | CARBON FIBER / NITRILE |
| 22 | 527233–0003 | 1 | TRAVEL SCALE | ALUMINUM |
| 23 | 400006–0056 | 1 | SET SCREW | SST |
| 24 | 512923–0001 | 1 | NAMEPLATE | 300 SER SS |
| 25 | 526037–0001 | 1 | VENT PLUG | PLASTIC |
| 26 | 526119–0002 | 6 | SCREW | STL, XYLAN COATED |
| 27 | 410001–0058 | 1 | LOCKNUT | SST |
| 28 | 400001–0013 | 2 | SCREW | SST |
| 29 | 410001–0056 | 1 | NUT | 300 SER SST |
| 30 | 527432–0001 | 1 | THRUST WASHER | STEEL |
| 31 | 430004–0014 | 6 | LOCK WASHER | SST |
| 32 | 512717–0001 | 1 | CAUTION DECAL | MYLAR |
| 33 | 512914–0003 | 1 | DECAL | MYLAR |
| 34 | 500458–0025 | – | GREASE | – |

NOTES:

1. DENOTES QUANTITY OF SPRINGS IN UNIT AT TIME OF ORIGINAL FACTORY SHIPMENT. DOES NOT INDICATE RANGE OR TRAVEL.
2. RECOMMENDED SPARE PARTS ARE ITEMS 5, 18, 19 & 20.
3. WHEN ORDERING REPLACEMENT PARTS, PROVIDE FACTORY THE VALVE SERIAL NUMBER FROM THE NAMEPLATE ON THE THE ACTUATOR.

PARTS & MATERIAL LIST
QUANTITIES ARE FOR ONE (1) UNIT ONLY

CD–952306 | 01.03

BADGER METER

ACTUATOR, 35 SQ IN, ATC, .56" STROKE, 12 PSI SIGNAL RANGE

SIZE C | PRODUCT NO. 29 | DWG NO. CD–952306 | ISSUE 01.03

SCALE 1/1 | MATERIAL PER 941312 | SHEET 1 OF 1

THIS PRINT CERTIFIED FOR:
P.O. :
LOCATION:
SERIAL NUMBER:
BADGER BY:
TAG NO:
DATE:

| REVISIONS | | | |
|---|---|---|---|
| ISSUE | DESCRIPTION | DATE | BY |
| 01.01 | ECN 8882 | 06–22–96 | GAP |
| 01.02 | ECN 9085 | 05–16–96 | GAP |
| 01.03 | ECN 9217 | 06–23–98 | GAP |

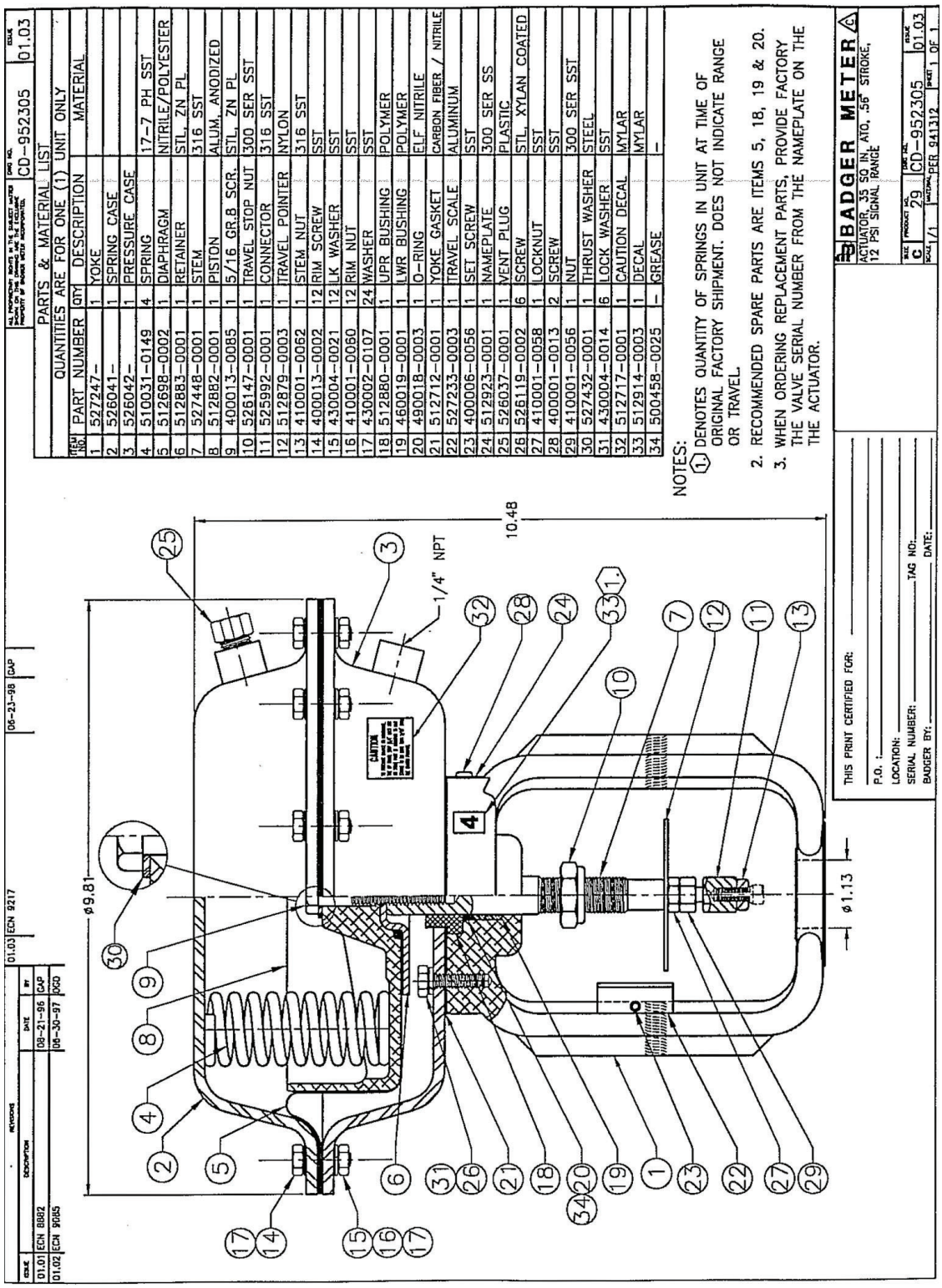
PARTS & MATERIAL LIST
QUANTITIES ARE FOR ONE (1) UNIT ONLY
ITEM NO. | PART NUMBER | QTY | DESCRIPTION | MATERIAL
1 | 527247– | 1 | YOKE
2 | 526041– | 1 | SPRING CASE
3 | 526042– | 1 | PRESSURE CASE
4 | 510031–0149 | 4 | SPRING | 17–7 PH SST
5 | 512698–0002 | 1 | DIAPHRAGM | NITRILE/POLYESTER
6 | 512883–0001 | 1 | RETAINER | STL, ZN PL
7 | 527448–0001 | 1 | STEM | 316 SST
8 | 512882–0001 | 1 | PISTON | ALUM, ANODIZED
9 | 400013–0085 | 1 | 5/16 GR.8 SCR. | STL, ZN PL
10 | 526147–0001 | 1 | TRAVEL STOP NUT | 300 SER SST
11 | 525992–0001 | 1 | CONNECTOR | 316 SST
12 | 512879–0003 | 1 | TRAVEL POINTER | NYLON
13 | 410001–0062 | 1 | STEM NUT | 316 SST
14 | 400013–0002 | 12 | RIM SCREW | SST
15 | 430004–0021 | 12 | LK WASHER | SST
16 | 410001–0060 | 12 | RIM NUT | SST
17 | 430002–0107 | 24 | WASHER | SST
18 | 512880–0001 | 1 | UPR BUSHING | POLYMER
19 | 460019–0001 | 1 | LWR BUSHING | POLYMER
20 | 490018–0003 | 1 | O–RING | ELF NITRILE
21 | 512712–0001 | 1 | YOKE GASKET | CARBON FIBER / NITRILE
22 | 527233–0003 | 1 | TRAVEL SCALE | ALUMINUM
23 | 400006–0056 | 1 | SET SCREW | SST
24 | 512923–0001 | 1 | NAMEPLATE | 300 SER SS
25 | 526037–0001 | 1 | VENT PLUG | PLASTIC
26 | 526119–0002 | 6 | SCREW | STL, XYLAN COATED
27 | 410001–0058 | 1 | LOCKNUT | SST
28 | 400001–0013 | 2 | SCREW | SST
29 | 410001–0056 | 1 | NUT | 300 SER SST
30 | 527432–0001 | 1 | THRUST WASHER | STEEL
31 | 430004–0014 | 6 | LOCK WASHER | SST
32 | 512717–0001 | 1 | CAUTION DECAL | MYLAR
33 | 512914–0003 | 1 | DECAL | MYLAR
34 | 500458–0025 | – | GREASE | –
NOTES:
1. DENOTES QUANTITY OF SPRINGS IN UNIT AT TIME OF ORIGINAL FACTORY SHIPMENT. DOES NOT INDICATE RANGE OR TRAVEL.
2. RECOMMENDED SPARE PARTS ARE ITEMS 5, 18, 19 & 20.
3. WHEN ORDERING REPLACEMENT PARTS, PROVIDE FACTORY THE VALVE SERIAL NUMBER FROM THE NAMEPLATE ON THE THE ACTUATOR.
BADGER METER
ACTUATOR, 35 SQ IN, ATO, .56" STROKE, 12 PSI SIGNAL RANGE
CD–952305
01.03
THIS PRINT CERTIFIED FOR:
P.O. :
LOCATION:
SERIAL NUMBER:
TAG NO:
BADGER BY:
DATE:
ø9.81
10.48
1/4" NPT
ø1.13
CAUTION
01.01 ECN 8882 03–21–96 CAP
01.02 ECN 9065 06–30–97 DGD
01.03 ECN 9217 06–23–98 CAP

**Control. Manage. Optimize.**

Research Control is a registered trademark of Badger Meter, Inc. Other trademarks appearing in this document are the property of their respective entities. Due to continuous research, product improvements and enhancements, Badger Meter reserves the right to change product or system specifications without notice, except to the extent an outstanding contractual obligation exists. © 2021 Badger Meter, Inc. All rights reserved.

**www.badgermeter.com**