A Badger Meter® Brand

Water Quality Monitor

Model Q45C4 Portable 4E Conductivity Monitor

Badger Meter

ATI-UM-04469-EN-02 (October 2024)

User Manual

CONTENTS

Introduction . . . 5
- General . . . 5
- Features . . . 5
- Q45C4 System Specifications . . . 6
- Q45C4 Performance Specifications . . . 6

Instrument Handle/Mounting . . . 7
- General . . . 7
- Portable Handle . . . 7

Electrical Installation . . . 8
- General . . . 8
- Direct Sensor Connection . . . 8
- Sensor Connection . . . 9

Configuration . . . 10
- General . . . 10
- Battery/Power Circuit Board . . . 11
- Battery Power Circuit Board . . . 12
- Voltage Outputs . . . 12
- User Interface . . . 13
  - Keys . . . 13
  - Display . . . 14
- Software . . . 15
  - Software Navigation . . . 15
  - Measure Menu [MEASURE] . . . 17
  - Calibration Menu [CAL] . . . 17
  - Configuration Menu [CONFIG] . . . 18
  - Control Menu [CONTROL] . . . 20
  - Diagnostics Menu [DIAG] . . . 20

Calibration . . . 22
- Overview and Methods . . . 22
  - 1-Point Calibration Explained . . . 22
  - Zero Cal Calibration Explained . . . 22
- Performing a Sensor Zero Calibration . . . 22
- Performing a 1-Point Calibration . . . 23
- Temperature Calibration . . . 25

System Maintenance . . . 26

System Checks 26
Instrument Checks 26
Cleaning the Sensor 26
Troubleshooting 27
Display Messages 28
Spare Parts 30

INTRODUCTION

General

The Model Q45C4 portable conductivity monitor/analyzer provides an extremely versatile measurement system for monitoring and control of conductivity over the range of 10 µS/cm…2.000 Siemens/cm.

The system operates on two AA and runs continuously for approximately 240 hours.

⚠ WARNING

IF UNIT IS TO BE STORED FOR MORE THAT 6 MONTHS REMOVE THE BATTERIES FROM THE HOLDER TO AVOID POTENTIAL DAMAGE FROM BATTERY LEAKAGE.

The Q45C4 portable displays conductivity and sensor temperature. The instrument is used with the high performance Q25C4 sensors.

Features

- Standard Q45C4 electronic transmitters are designed to be a fully isolated, battery operated instrument. The monitor can be quickly converted to either a loop-power transmitter or line powered analyzer.
- Two 10-bit, isolated, 0…2.5V DC analog outputs may be configured to track conductivity, TDS and/or temperature. Both analog outputs can be individually programmed to fail to specific values.
- Large, high contrast, custom Super-Twist display provides excellent readability. The secondary line of display uses 5 × 7 dot matrix characters for clear message display. Two of four measured parameters may be on the display simultaneously. An LED backlight can be turned on if necessary for use in very low light conditions.
- 4-Electrode measurement system. Two of the electrodes are used to establish the sensor drive potential, while the other two sense the flow of current between the drive electrodes and maintain proper drive potential. Sensor diagnostics monitor electrode coating/fouling, sensor leaks and RTD condition. Diagnostic messages provide a clear description of any problem with no confusing error codes to look up. Messages are also included for diagnosing calibration problems.
- Quick and easy 1-point calibration method and sensor zero-cal. To provide high accuracy, all calibration methods include stability monitors that check temperature and main parameter stability before accepting data.
- High accuracy Pt1000 temperature input. Temperature element can be user calibrated.
- Security lock feature to prevent unauthorized tampering with transmitter settings. All settings can be viewed while locked, but they cannot be changed.
- PEEK electrode insulator, custom rear PEEK sealing nut and triple O-ring rear seal (Viton and EPR) allow complete submersion of the sensor.
- Custom double-shielded, cross-linked cable with PE jacket for excellent chemical resistance.

Equipment bearing this marking may not be discarded by traditional methods in the European community after August 12, 2005, per EU Directive 2002/96/EC. End users must return old equipment to the manufacturer for proper disposal.

Q45C4 System Specifications

Enclosure	NEMA 4X, polycarbonate, stainless steel hardware, weatherproof and corrosion resistant, HWD: 4.40 in. (111.76 mm) × 4.40 in. (111.76 mm) × 3.50 in. (88.90 mm)
Mounting Options	Handheld w/nylon carrying strap
Weight	DC transmitter configuration: 1 lb (0.45 kg)
Display	0.75 in. (19.05 mm) high 4-digit main display with sign 12-digit secondary display, 0.30 in. (7.62 mm) 5 × 7 dot matrix Integral LED back-light for visibility in the dark
Keypad	4-key membrane type with tactile feedback, polycarbonate with UV coating
Ambient Temperature	Service, –20…60° C (–4…140° F) Storage, –30…70° C (–22…158° F)
Ambient Humidity	0…95%, indoor/outdoor use, non-condensing to rated ambient temperature range
Electrical Certification	Ordinary location, cCSAus (CSA and UL standards – both approved by CSA), pollution degree 2, installation category 2
EMI/RFI Influence	Designed to EN 61326-1
Output Isolation	600V galvanic isolation
Filter	Adjustable 0…9.9 minutes additional damping to 90% step input
Temperature Input	Selectable Pt1000 or Pt100 RTD
Displayed Parameters	Main input, 0.0 µS…2000 mS TDS Sensor temperature, –10.0…110.0° C (14…230° F)
Main Parameter Ranges	Automatic or manual selection of the following: 0…2000 µS 0.0…2.000 mS 0.00…20.00 mS 0.0…200.0 mS 0…2000 mS 0.0…2.000 S
Power	Two generic AA batteries, low battery indication at 1.60V DC. Lithium AA batteries recommended for max performance.
Outputs	Two 0…2.5V DC isolated outputs are provided on for connection to data recorders and more
Battery Life	Approximately 240 hours of operational use on a set of batteries (without backlight)

Q45C4 Performance Specifications

(Common to all variations)

Accuracy	0.3% of span or better (±0.1 µS)
Repeatability	0.3% of span or better (±0.1 µS)
Sensitivity	0.05% of span (±0.1 µS)
Stability	0.1% of span per 24 hours, non-cumulative
Warm-Up Time	7 seconds to rated performance
Supply Voltage Effects	±0.05% span
Instrument Response Time	12 seconds to 90% of step input at lowest setting
Temperature Drift	Span or zero, 0.03% of span/°C
Max. Sensor-Instrument Distance	60 ft (18.3 m)
Sensor Types	Model Q25C4 - 6 wire input

INSTRUMENT HANDLE/MOUNTING

General

The Q45C4 portable conductivity system comes complete with a specially designed handle that allows the system to be comfortably carried or quickly strapped to a railing. Although the system is designed to be a portable system, it can be permanently mounted for longer term field use. This is possible due to the very long battery life spans that can be achieved with the system.

Portable Handle

A removable handle is included with each unit that provides not only comfortable transportation of the system, but the integral locking strap allows the system to be quickly mounted to pipes or rails for longer term use in one area.

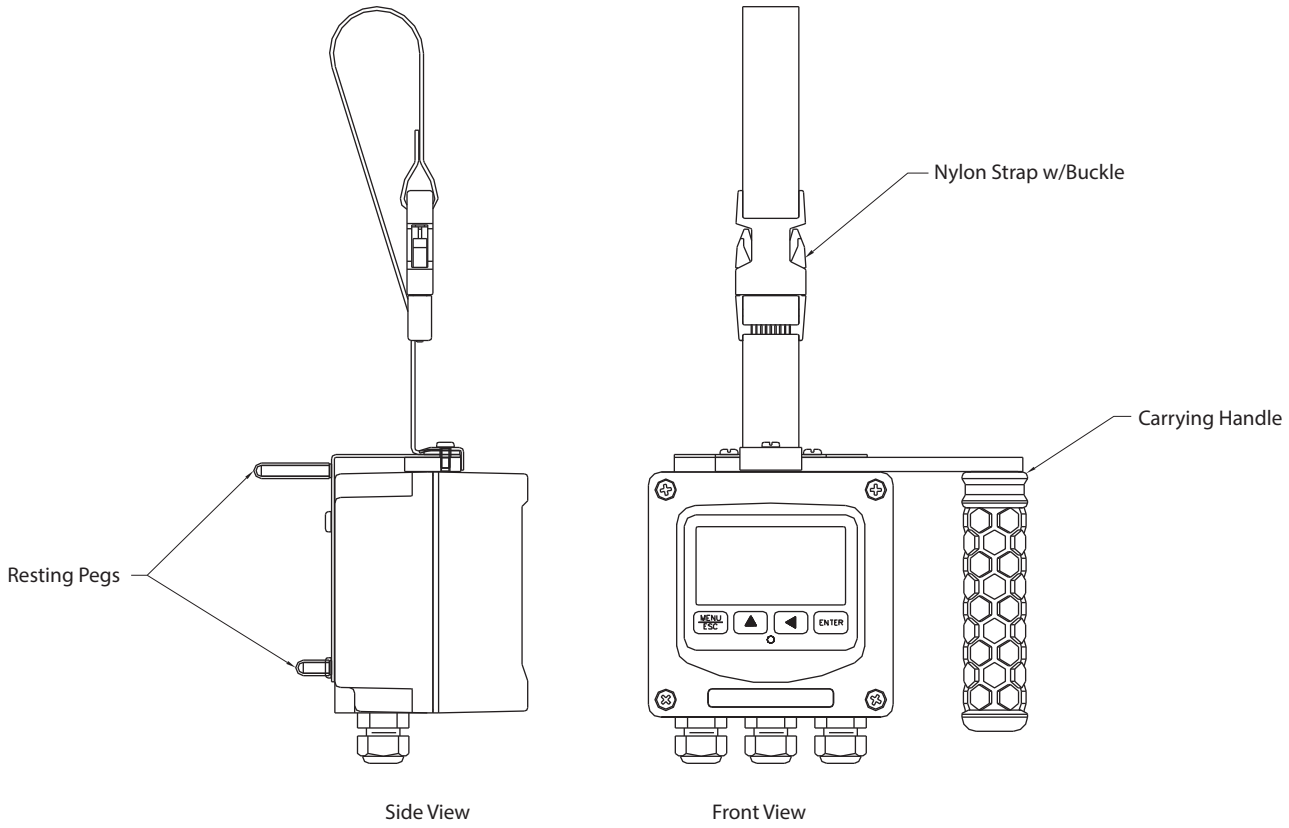

Figure 1: Portable handle - views

ELECTRICAL INSTALLATION

General

The sensor cable can be quickly connected to the Q45 terminal strip by matching the wire colors on the cable to the color designations on the label in the monitor. Keep signal cable away from AC power lines, adjustable frequency drives, motors or other noisy electrical signal lines.

Direct Sensor Connection

The sensor cable should be routed into the enclosure through the right-hand cord grip on the bottom of the enclosure. Make sure the cord grips are snugly tightened after electrical connections have been made to prevent moisture incursion. When stripping cables, leave adequate length for connections in the transmitter enclosure as shown in *Figure 2*.

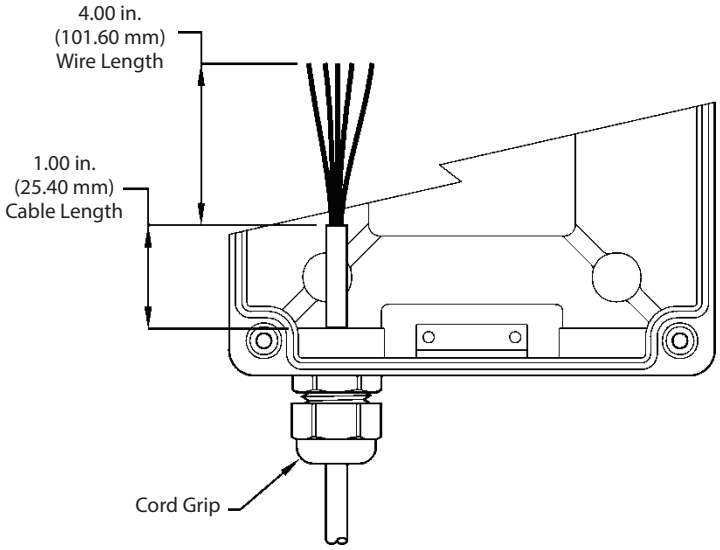

Figure 2: Sensor cable preparation

Sensor Connection

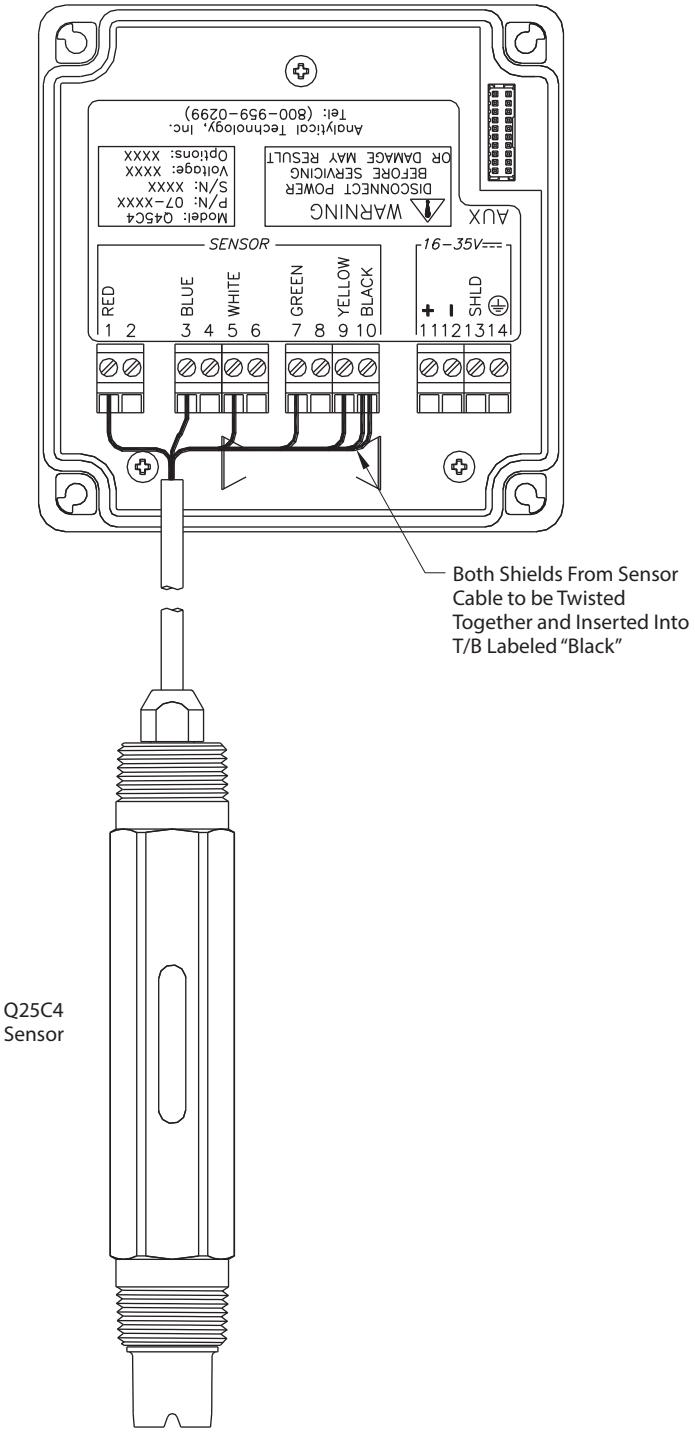

Figure 3: Sensor connection

CONFIGURATION

General

To turn the system ON, simply press and hold the **MENU** key for approximately 5 seconds and the display turns on. To turn the unit OFF, press and hold the **ENTER** key until the display shuts off (about 3 seconds).

NOTE: The unit must be in the *MEASURE* menu in order for the 3-second key press to operate.

The instrument turns off automatically after 30 minutes if no keys are pressed, optimizing battery life. This mode of operation is ideal for portable operation where intermediate readings are being taken. Assuming the instrument is used about an hour per day, this would result in a battery lifespan of about 240 hours. For continuous operation with no automatic shutoff, turn the *Auto-OFF* feature to OFF in the *DIAG* menu. This mode is intended for use when the instrument outputs are used for transmitting data. In this mode, the instrument runs continuously until the battery reaches the shutdown level (1.6V).

NOTE: Rechargeable AA batteries reduce operational times dramatically, as they typically contain much less energy than standard batteries.

The PWR switch disconnects the AA batteries and is only used to disconnect the battery if the system is not to be used for a long period of time (> 3 months of storage). Otherwise, leave this switch in the ON position. The red dip switch is only for factory use.

The **"B"** flashes on the display next to the main measurement indication when the instrument requires battery replacement. If the battery is not replaced, eventually the unit may not turn on in the normal operating mode. Once the low battery condition is indicated, the instrument only stays powered for 10 minutes.

Battery/Power Circuit Board

Q45C4 monitors are powered by internal AA alkaline batteries *Figure 5 on page 13* shows this board assembly with batteries installed.

The battery circuit board contains 3 switch assemblies as shown in *Figure 4*.

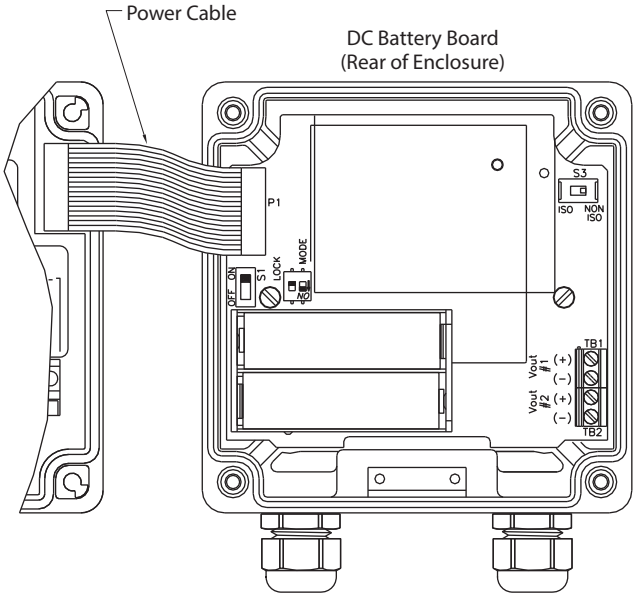

Figure 4: Battery board connections

The first **(S1)** is an On/Off slide switch. This switch must be in the ON position for operation. Turn it to OFF if you do not intend to operate the monitor in the next week or two.

The second switch assembly **(S2)** contains two switches, the one on the left marked *LOCK* and the one on the right marked *MODE*. The function of these two slide switches are as follow:

- **LOCK**
  This switch is used to define how the monitor turns on and off. This switch is normally in the OFF position. With the lock switch off, the monitor turns on manually using the MENU key on the front of the monitor. With the lock switch in the ON position, the monitor is always on when there is enough power to run the monitor. The ON position is normally used when operating from an external power supply intended for continuous operation.
- **MODE**
  This switch is used to set the voltage at which monitor shuts off when powered by internal batteries. Alkaline batteries can normally be run down to about 0.8V. When using alkaline batteries, the *MODE* switch is in the OFF position (factory default). If rechargeable NiMH batteries are substituted, place the *MODE* switch in the ON position.

  NOTE: Rechargeable NiMH batteries have only about 35% of the capacity of alkalines. However, NiMH batteries can be recharged hundreds of times.
- **ISO**
  The third switch assembly is a single slide switch **(S3)** which defines whether the 0…2.5V DC signals from the monitor are isolated or non-isolated. Output isolation is not required when outputs are connected to the internal data logger. However, if the outputs are connected to external devices through the external connection cable, putting this switch in the ISO position protects against possible ground loops. The isolation circuit slightly increases the power requirement for the monitor, resulting in a bit less battery life.

Battery Power Circuit Board

The Q45 portable instrument is primarily operated by software settings. However, there are also a few hardware details on the battery circuit board to note.

The battery board is a circuit board that sits in the rear of the Q45 enclosure and connects to the Q45 AUX port through a ribbon cable. The battery board contains the battery clip for the two AA batteries and the output terminal strip for the two 0…2.5V DC outputs. Along the left side below the ribbon cable is an ON/OFF slide switch. This switch can be used to turn the instrument completely OFF when not intending to use the unit for an extended period.

Voltage Outputs

There are two analog voltage outputs on the battery board with a terminal strip located in the lower right corner. The outputs are 0…2.5V DC and may be used to send isolated data to remotely located recorders, PLCs and more. *Output #1* is used only for conductivity and *Output #2* can be used for either temperature or an additional conductivity channel.

User Interface

The user interface for the Q45 Series instrument consists of a custom display and a membrane keypad. All functions are accessed from this user interface (no internal jumpers or pots, for example).

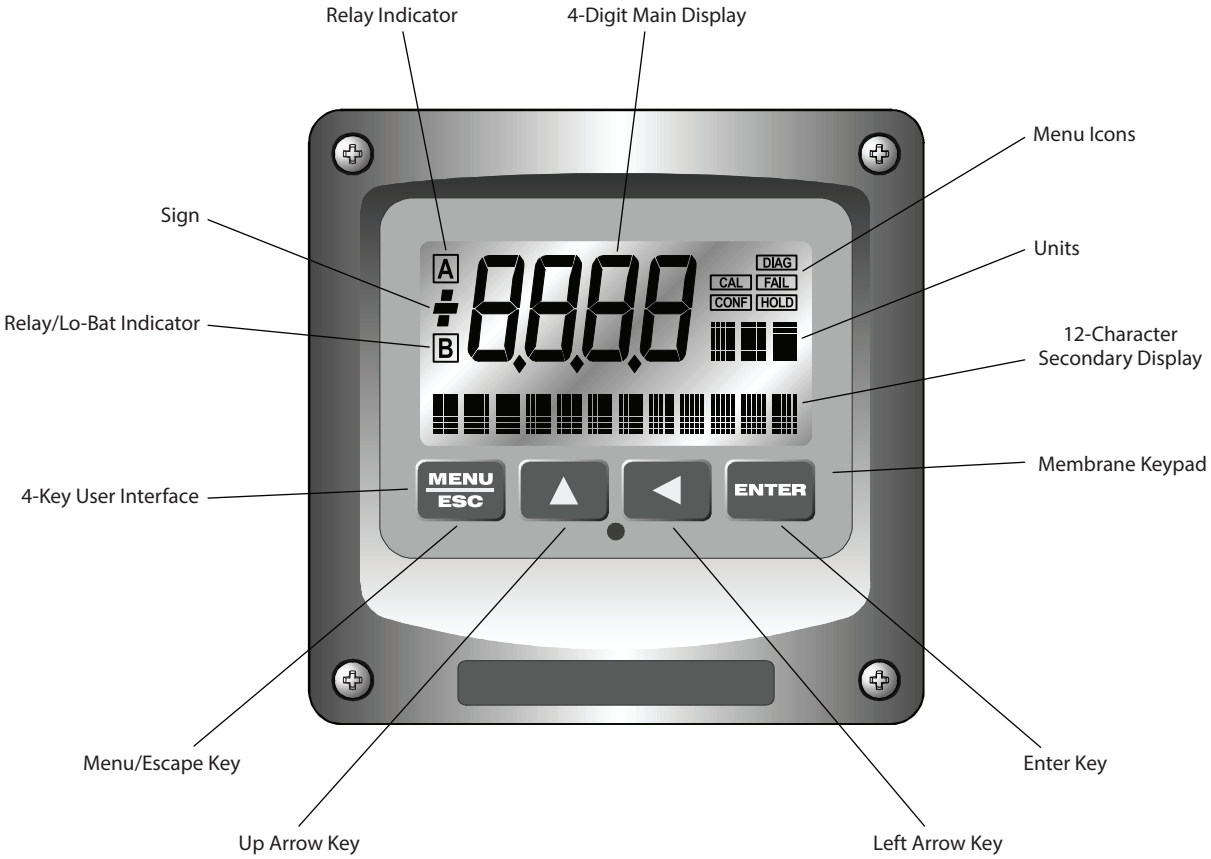

Figure 5: User interface

Keys

All user configurations occur through the use of four membrane keys. These keys are used as follows:

MENU/ESC	To scroll through the menu section headers or to escape from anywhere in software. The escape sequence allows the user to back out of any changes in a logical manner. Using the ESC key aborts all changes to the current screen and backs the user out one level in the software tree. The manual refers to this key as either MENU or ESC, depending upon its particular function. In the battery-powered version of the Q45, this is also the ON button.
UP (arrow)	To scroll through individual list or display items and to change number values.
LEFT (arrow)	To move the cursor from right to left during changes to a number value.
ENTER	To select a menu section or list item for change and to store any change.

Display

The large custom display provides clear information for general measurement use and user configuration. There are three main areas of the display: the main parameter display, the secondary message line and the icon area.

Main Parameter

During normal operation, the main parameter display indicates the present process input with sign and units. This main display may be configured to display any of the main measurements that the system provides. During configuration, this area displays other useful set-up information to the user.

Lower Line

During normal operation, the lower line of the display indicates user-selected secondary measurements that the system is making. This also includes calibration data from the last calibration sequence and the transmitter model number and software version. During configuration, the lower line displays menu items and set-up prompts to the user. Finally, the lower line displays error messages when necessary. For a description of all display messages, see *"Display Messages" on page 28*.

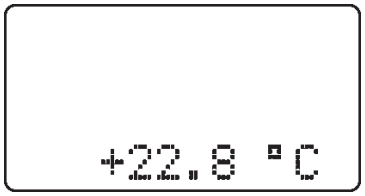

Icon Area

The icon area contains display icons that assist the user in set-up and indicate important states of system functions. The *CAL*, *CONFIG* and *DIAG* icons are used to tell the user what branch of the software tree the user is in while scrolling through the menu items. This improves software map navigation dramatically. Upon entry into a menu, the title is displayed (such as *CAL*), and then the title disappears to make way for the actual menu item. However, the icon stays on.

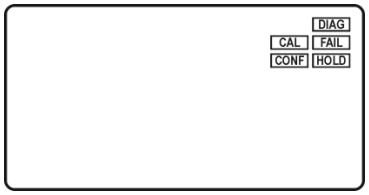

HOLD

The *HOLD* icon indicates that the analog output of the transmitter has been put into output hold. In this case, the output is locked to the last input value measured when the *HOLD* function was entered. *HOLD* values are retained even if the unit power is cycled.

FAIL

The *FAIL* icon indicates that the system diagnostic function has detected a problem that requires immediate attention. This icon is automatically cleared once the problem has been resolved.

Software

The software of the Q45C4 is organized in an easy to follow menu-based system. All user settings are organized under five menu sections: *Measure, Calibration [CAL], Configuration [CONFIG], Control [CONTROL]* and *Diagnostics [DIAG]*.

NOTE: The default *Measure* menu is display-only and has no menu icon.

Software Navigation

Within the *CAL, CONFIG, CONTROL* and *DIAG* menu sections is a list of selectable items. Once a menu section (such as *CONFIG*) has been selected with the MENU key, the user can access the item list in this section by pressing either the **ENTER** key or the **UP** arrow key. The list items can then be scrolled through using the **UP** arrow key. Once the last item is reached, the list wraps around and the first list item is shown again. The items in the menu sections are organized such that more frequently used functions are first, while more permanent function settings are later in the list. See *Figure 6 on page 16* for a visual description of the software.

Each list item allows a change to a stored system variable. List items are designed in one of two forms: simple single variable or multiple variable sequence. In the single variable format, the user can quickly modify one parameter. For example, changing temperature display units from °F to °C. In the multiple variable sequence, variables are changed as the result of some process. For example, the calibration of conductivity generally requires more than one piece of information to be entered. Most of the menu items in the software consist of the single variable format type.

Any data that may be changed flashes. This flashing indicates *User Entry* mode and is initiated by pressing the **ENTER** key. The **UP** arrow key increases a flashing digit from 0…9. The **LEFT** arrow key moves the flashing digit from right to left. Once the change has been completed, pressing **ENTER** again stores the variable and stops the flashing. Pressing **ESC** aborts the change and also exits *User Entry* mode.

The starting (default) screen is always the *Measure* menu. The **UP** arrow key is used to select the desired display. From anywhere in this section the user can press the **MENU** key to select one of the four menu sections.

The UP arrow icon next to all list items on the display is a reminder to scroll through the list using the **UP** arrow key.

To select a list item for modification, first select the proper menu with the **MENU** key. Scroll to the list item with the **UP** arrow key and then press the **ENTER** key. This tells the system that the user wishes to perform a change on that item. For single item type screens, once the user presses the **ENTER** key, part or all of the variable begins to flash, indicating that the user may modify that variable using the arrow keys. However, if the instrument is locked, the transmitter displays the message "Locked!" and does not enter *User Entry* mode. The instrument must be unlocked by entering the proper code value to allow authorized changes to user entered values. Once the variable has been reset, pressing the **ENTER** key again causes the change to be stored and the flashing to stop. The message "Accepted!" displays if the change is within pre-defined variable limits. If the user decides not to modify the value after it has already been partially changed, pressing the **ESC** key aborts the modification and returns the entry to its original stored value.

In a menu item which is a multiple variable sequence type, once the **ENTER** key is pressed there may be several prompts and sequences that are run to complete the modification. The **ESC** key can always be used to abort the sequence without changing any stored variables.

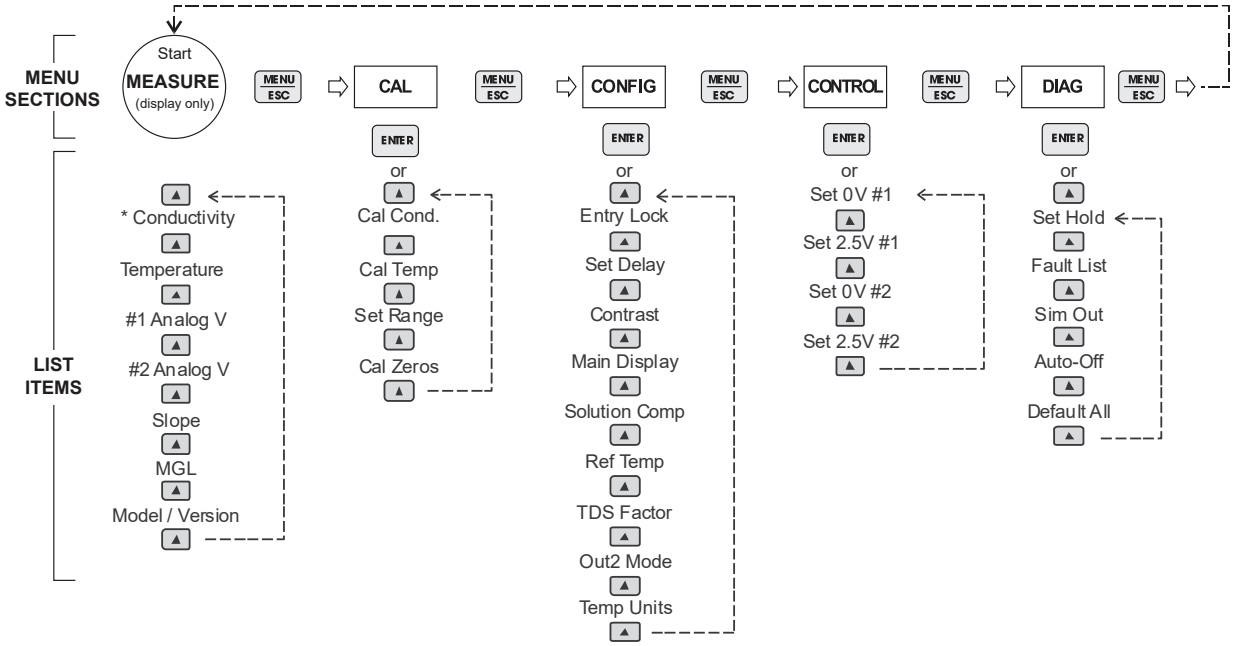

Figure 6: Software map

Measure Menu [MEASURE]

The default menu for the system is the display-only menu *MEASURE*. This menu is a display-only measurement menu and has no changeable list items. When left alone, the instrument automatically returns to this menu after approximately 30 minutes. While in the default menu, the UP arrow allows the user to scroll through the secondary variables on the lower line of the display. A brief description of the fields in the basic transmitter version is as follows:

Transmitter Measure Screens

25.7° C	Temperature display. Can be displayed in °C or °F, depending on user selection. A small "m" on the left side of the screen indicates the transmitter has automatically jumped to a manual 25° C setting due to a failure with the temperature signal input.
#1 Vout	Instrument Output Signal #1.
#2 Vout	Instrument Output Signal #2.
Slope = 100%	Sensor calibration slope (updated after successful calibration has been completed).
TDS = 200 mgL	Total Dissolved Solids (TDS). Displays TDS of process.
Q45C4 v3.00	Transmitter software version number.

NOTE: A display test (all segments ON) can be actuated by pressing and holding the **ENTER** key while viewing the model/version number on the lower line of the display.

The *MEASURE* screens are intended to be used as a very quick means of looking up critical values during operation or troubleshooting.

Calibration Menu [CAL]

The *Calibration* menu contains items for frequent calibration of user parameters. There are four items in this list: *Cal Cond*, *Cal Temp*, *Set Range* and *Cal Zeros*.

Cal Cond The conductivity calibration function allows the user to adjust the transmitter span reading to match reference buffers. See *"Calibration" on page 22* for more details.

Cal Temp The temperature calibration function allows the user to adjust the offset of the temperature response by a small factor of ±5° C. The temperature input is factory calibrated to very high accuracy. However, long cable lengths and junction boxes may degrade the accuracy of the temperature measurement in some extreme situations. Therefore, this feature is provided as an adjustment. See *"Calibration" on page 22* for more details.

Set Range This function sets the user display format for all system menus. For example, setting range to 200.0 mS displays "000.0 mS" units for all settings of relay setpoints, 4…20 points, PID and more. When autoranging display (*AUTO*) is also selected in the *Main Display* menu in *CONFIG*, the main measurement display automatically selects the proper display format for measured conductivity – but all setpoints are still set to the *Set Range* value format. The auto setting is useful for viewing a very wide range of conductivity values.

An over-range error therefore cannot occur unless the conductivity is above the overall maximum level of 2000 mS. In some applications, users may find the fixed units and decimal point format of the manual ranging mode more preferable. In this mode, the user can select a specific range of operation (for example, 2000 µS) that does not change. In this mode, values greater than the range value selected causes an over-range alarm. Press **ENTER** to initiate *User Entry* mode; the entire value flashes. Use the **UP** arrow key to modify the range value. Press **ENTER** to store the new value.

Cal Zeros This function calibrates all range zero-points to the specific sensor being used. This function is only required to be performed once at initial startup or when the sensor has been replaced. See *"Calibration" on page 22* for more details.

Configuration Menu [CONFIG]

The *Configuration* menu contains all of the general user settings:

Entry Lock This function allows the user to lock out unauthorized tampering with instrument settings. All settings may be viewed while the instrument is locked, but they cannot be modified. The *Entry Lock* feature is a toggle-type setting; that is, entering the correct code locks the transmitter and entering the correct code again unlocks it. The code is preset at a fixed value. Press **ENTER** to initiate *User Entry* mode and the first digit flashes. Use arrow keys to modify value. See *page 30* for the Q45C4 lock/unlock code. Press **ENTER** to toggle lock setting once code is correct. Incorrect codes do not change state of lock condition.

Set Range This function allows the user to select either the automatic ranging feature or manual ranging. When autoranging is selected (*AUTO*), the display automatically selects the proper display format for measured conductivity. An over-range error therefore cannot occur unless the conductivity is above the overall maximum level of 2000 mS. In some applications, users may find the fixed units and decimal point format of the manual ranging mode more preferable. In this mode, the user can select a specific range of operation (for example, 200.0 µS) that does not change. In this mode, values greater than the range value selected causes an over-range alarm. Press **ENTER** to initiate *User Entry* mode; the entire value flashes. Use the **UP** arrow key to modify the range value. Press **ENTER** to store the new value.

Contrast This function sets the contrast level for the display. The custom display is designed with a wide temperature range, Super-Twist Nematic (STN) fluid.

The STN display provides the highest possible contrast and widest viewing angle under all conditions. Contrast control of this type of display is generally not necessary, so contrast control is provided as a means for possible adjustment due to aging at extreme ranges. In addition, the display has an automatic temperature compensation network. Press **ENTER** to initiate *User Entry* mode, and the value flashes. Use arrow keys to modify the value; range is 0…8 (0 being lightest). Press **ENTER** to update and store the new value.

Main Display This function allows the user to change the measurement in the primary display area. The user may select between *AUTO*, conductivity, sensor temperature or PID% (if enabled). Using this function, the user may choose to put temperature in the main display area and conductivity on the secondary, lower line of the display. The "Auto" selection is used to display an autoranging format for displayed conductivity – as opposed to fixed units. It does not affect the format of the settings for relays, 4…20 outputs and more. Press **ENTER** to initiate *User Entry* mode, and the entire value flashes. Use the **UP** arrow key to modify the desired display value. Press **ENTER** to store the new value.

Solu Comp This function sets the correction slope value for the linear/fixed temperature compensation method. Linear compensation for most aqueous solutions is typically 2.00%/°C (25° C reference temperature) for neutral water. This is the factory default and it provides the best compensation for most aqueous solutions. Other typical ranges include:

Acids: 1.0…1.6%/°C
Bases: 1.8…2.0%/°C
Salts: 2.2…3.0%/°C

NOTE: If the temperature units are changed between °C and °F (see *"Temp Units" on page 19*), the default setting for this output changes between 2.00%/°C…1.11%/°F accordingly.

Other compensation slopes may be found in chemical handbooks for uncommon solutions (such as the CRC). Press **ENTER** to initiate *User Entry* mode, and the entire value flashes. Use the arrow keys to modify the desired value; entry range is 0.00…9.99%/°C. Press **ENTER** to store the new value.

Ref Temp The reference temperature function sets the basis point for the linear temperature compensation methods. In most cases this setting should be left at the default of 25.0° C.

Press **ENTER** to initiate *User Entry* mode, and the entire value flashes. Use the arrow keys to modify the desired value; range is 0.0…50.0° C. Press **ENTER** to update and store the new value.

TDS Factor This function sets the linear relationship of the TDS (total dissolved solids) reading to the conductivity measurement. The actual units for the slope are in mg/L/µS. The default value is 00.49 mg/L/µS.

Press **ENTER** to initiate *User Entry* mode, and the entire value flashes. Use the arrow keys to modify the desired value; range is 00.00…99.99 mg/L/µS. Press **ENTER** to update and store the new value.

Out #2 Mode This function sets analog output #2 for either temperature (default), conductivity or TDS. Press **ENTER** to initiate *User Entry* mode, and the entire value flashes. Use the **UP** arrow key to modify the desired value; selections include 1–°C/°F for temperature, 2–conductivity for conductivity or 3–TDS. Press **ENTER** to store the new value.

Temp Units This function sets the display units for temperature measurement. Press **ENTER** to initiate *User Entry* mode, and the entire value flashes. Use the **UP** arrow key to modify the desired display value. The choices are *°F* and *°C*. Press **ENTER** to store the new value.

Control Menu [CONTROL]

The *Control* menu contains all of the output control user settings:

Set 0V #1
Set 2.5V #1
Set 0V #2
Set 2.5V #2

These functions set the output range for each of the two instrument outputs. The value stored for the 0V point may be higher or lower than the value stored for the 2.5V point.

The entry values are limited to values within 2.000 Siemens/cm and must be separated by at least 1% of this range. Use the **LEFT** arrow key to select the first digit to be modified. Then use the **UP** and **LEFT** arrow keys to select the desired numerical value. Press **ENTER** to store the new value.

Output #1 is always in units of conductivity, as it is fixed to track conductivity. *Output #2* is in either units of conductivity, mg/L or °C/°F, depending on whether conductivity, TDS or temperature is set for *Out#2* in the *CONFIG* menu.

Diagnostics Menu [DIAG]

The *Diagnostics* menu contains all of the user settings that are specific to the system diagnostic functions, as well as functions that aid in troubleshooting application problems.

Set Hold

The *Set Hold* function locks the current loop output values on the present process value. This function can be used prior to calibration, or when removing the sensor from the process, to hold the output in a known state. Once *HOLD* is released, the outputs return to their normal state of following the process input. The transfer out of *HOLD* is bumpless on the both analog outputs - that is, the transfer occurs in a smooth manner rather than as an abrupt change. An icon on the display indicates the *HOLD* state, and the *HOLD* state is retained even if power is cycled. Press **ENTER** to initiate *User Entry* mode, and the entire value flashes. Use the **UP** arrow key to modify the desired value, selections are **ON** for engaging the *HOLD* function and **OFF** to disengage the function. Press **ENTER** to store the new value.

NOTE: When the Relay Option Board is installed, the *Set Hold* function holds BOTH current levels, as well as *ALL* relay settings.

The *Set Hold* function can also hold at an output value specified by the user. To customize the hold value, first turn the *HOLD* function on. Press the **ESC** key to go to the *DIAG* menu and scroll to *Sim Output* using the **UP** arrow key. Press **ENTER**. Follow the instructions under *"Sim Out" on page 21*.

Fault List

The *Fault List* screen is a read-only screen that allows the user to display the cause of the highest priority failure. The screen indicates the number of faults present in the system and a message detailing the highest priority fault present.

NOTE: Some faults can result in multiple displayed failures due to the high number of internal tests occurring. As faults are corrected, they are immediately cleared.

Faults are not stored; therefore, they are immediately removed if power is cycled. If the problem causing the faults still exists, however, faults display again after power is re-applied and a period of time elapses during which the diagnostic system re-detects them. The exception to this rule is the calibration failure. When a calibration fails, no corrupt data is stored. Therefore, the system continues to function normally on the data that was present before the calibration was attempted.

After 30 minutes or if power to the transmitter is cycled, the failure for calibration clears until calibration is attempted again. If the problem still exists, the calibration failure reoccurs. Press **ENTER** to initiate view of the highest priority failure. The display automatically returns to normal after a few seconds.

Sim Out

The *Sim Out* function allows the user to simulate the conductivity level of the instrument in the user selected display range. The user enters a conductivity value directly onto the screen, and the output responds as if it were actually receiving the signal from the sensor. This allows the user to check the function of attached monitoring equipment during set-up or troubleshooting. Escaping this screen returns the unit to normal operation. Press **ENTER** to initiate the *User Entry* mode, and the rightmost digit of the value flashes. Use arrow keys to modify desired value.

The starting display value is the last read value of the input. The output is under control of the *SIM* screen until the **ESC** key is pressed.

NOTE: If the *HOLD* function is engaged before the *Sim Output* function is engaged, the simulated output remains the same even when the **ESC** key is pressed. Disengage the *HOLD* function to return to normal output.

Default All

The *Default All* function allows the user to return the instrument back to factory default data for all user settings. It is intended to be used as a last resort troubleshooting procedure. All user settings are returned to the original factory values. Hidden factory calibration data remains unchanged. Press **ENTER** to initiate *User Entry* mode and the value *NO* flashes. Use the **UP** arrow key to modify value to *YES* and press **ENTER** to reload defaults.

CALIBRATION

Overview and Methods

Calibration of the Q45C4 is required to accurately match the sensor characteristics to the monitor/analyzer. Since the output of the conductivity sensor does not degrade over time, it is typically only required that the sensor be calibrated at initial installation and then cleaned periodically to maintain proper system accuracy.

It is important for the user to establish a periodic cleaning and calibration; check schedule for sensor maintenance to maintain high system accuracy.

Since the conductivity of a solution is greatly affected by temperature, proper settings for thermal compensation are critical for accurate operation. Before calibrating the instrument for the very first time, it is important to select the proper operating parameters in the *Configuration* menus for temperature compensation methods. Also at initial installation, a temperature calibration must be performed before conductivity can be calibrated.

When using conductivity calibration standards for a wet calibration, take care not to inadvertently contaminate the reference solution; always thoroughly clean the sensor, rinsing off in tap water and then finish rinsing in pure or de-ionized water.

NOTE: Calibration solutions less than 200 µS or greater than 100 mS can be very unstable. Moving the sensor back and forth between different value conductivity reference solutions can quickly contaminate the solutions and render them inaccurate.

1-Point Calibration Explained

The 1-point calibration method is generally known as the "grab sample" calibration method. In the 1-point calibration method, the sensor may be removed from the application and placed into a reference solution. It may also be left in the measurement process and calibrated by reference. The 1-point calibration adjusts the sensor slope to match the exact calibration point. Readings beyond that point are then extrapolated from the determined slope of the calibration line. Since the sensor slope does not degrade over time, frequent re-calibration is unnecessary. Calibration accuracy can be optimized by calibrating with a reference solution which is close to the values typically measured.

Zero Cal Calibration Explained

The sensor offset must be set for the system only on initial sensor installation, or when the cable length has been altered. The *Zero Cal* method establishes all of the sensor offset points for the instrument's 6 ranges of operation.

Performing a Sensor Zero Calibration

The sensor offset **MUST** be set for the system on initial sensor installation or when the cable length has been altered. However, it can easily be adjusted at any time by re-calibrating the sensor in air. The sensor zero-calibration generally has little effect in measurements above about 50 mS, but it can have a significant effect in measurements below about 1 mS. If the sensor zero cal is to be performed, it must be done **BEFORE** the 1-point reference calibration.

To begin the sensor zero cal, verify that the sensor is connected, clean and dry. It should be placed in the air with the electrodes at least 1 ft away from any nearby objects. Holding it is not recommended – place on table or just hang.

Procedure

1. Remove sensor from process and clean thoroughly. Dry sensor and position on table or hang in air (in air is best). If on table, let end of sensor hang over the edge of table.
2. Scroll to the *CAL* menu section using the **MENU** key and press **ENTER** or the **UP** arrow key. Scroll to the menu *Zero Cal*.
3. Press the **ENTER** key. The screen prompts the user to position the sensor in air.
4. Press the **ENTER** key. The screen automatically scrolls through all ranges and establish and store the proper zero points.

Performing a 1-Point Calibration

This calibration method is intended to be used as an online calibration method or a wet-cal with reference solutions. During calibration, the system displays the current conductivity reading and the user can manually enter a reference value from a reference solution bottle or a comparative reference instrument.

For wet calibrations, the user may use pre-made calibration references (also available from Badger Meter) or a NaCl solution may be made using pure, dried NaCl crystals and one liter of high purity, de-ionized, CO_2-free water as mixed in the table shown in *"NaCl Reference Solution for Calibration (25° C)"*. All table data is at 25° C, therefore, the sensor must be at this temperature to calibrate properly using the table data. If another reference calibration solution is being used, be sure to note temperature of reference solution before calibration. Since the sensor must ideally be at the specified temperature, wet calibrations can be difficult to perform accurately.

NaCl Reference Solution for Calibration (25° C)

µS/cm	NaCl (gm)
100	0.05
200	0.10
500	0.25
1000	0.50
2000	1.01
3000	1.53
4000	2.06
5000	2.61
8000	4.34
10000	5.56
20000	11.59

During the 1-point calibration, the system automatically picks the correct range for the calibration reference if the Q45C4 is in the *AUTO* range (see *"1-Point Calibration Explained" on page 22*). If the Q45C4 is in a the normal display mode, the user must be careful to calibrate with a solution that falls into the manual range selected. If the calibration solution is outside the manual range, an error results.

Procedure

1. If a zero calibration on the sensor is also to be performed, that must be done **FIRST**. The zero calibration process can have an impact on the result of the 1-point calibration. So if a zero cal is required, do that procedure and return here.
2. Determine whether the calibration is done online or with the sensor removed and placed into a reference solution. If the sensor is removed from the application, rinse and clean. When calibrating a toroid sensor in a beaker of reference solution, there must be plenty of clearance between the sensor and any nearby objects – at least 2 in. Also, gently stir sensor back and forth to remove any bubbles that may be present in the inner bore.
3. If the sensor has been removed and placed into a solution, allow the sensor to temperature equilibrate with the solution as much as possible. With the sensor coming from an application that differs greatly in temperature, the user may have to wait as much as 20 minutes. If the sensor is online, the user may want to set the output *HOLD* feature prior to calibration to lock out any output fluctuations.
4. Scroll to the *CAL* menu section using the **MENU** key and press **ENTER** or the **UP** arrow key. Scroll until *Cal Cond* is displayed. Press **ENTER**.
5. The screen prompts the user to place the sensor into the reference solution (ideally this has already been done to achieve temperature equilibrium). Once sensor is ready, press **ENTER**.
6. The system now begins acquiring data for the calibration value. As data is gathered, the units for conductivity and temperature may flash. Flashing units indicate that this parameter is unstable. The calibration data point acquisition stops only when the data remains stable for a pre-determined amount of time. This can be overridden by pressing **ENTER**. If the data remains unstable for 10 minutes, the calibration fails and the message "Cal Unstable" displays.
7. The screen displays the last measured conductivity value and a message displays prompting the user for the reference value. The user must then modify the screen value with the arrow keys and press **ENTER**. The system then performs the proper checks.
8. If accepted, the screen displays the message "PASS" with the slope value, then it returns to the main measurement display. If the calibration fails, a message indicating the cause of the failure displays and the *FAIL* icon turns on.

Temperature Calibration

The temperature input is factory calibrated for the highest accuracy. Temperature calibration is not recommended; however, it is provided for applications in which very long cable lengths are needed. For example, at 50 ft, readings may be off ±0.2° C.

The temperature calibration sequence is essentially a 1-point offset calibration that allows adjustments of approximately ±5° C.

The sensor temperature may be calibrated on line, or the sensor can be removed from the process and placed into a known solution temperature reference. In any case, it is critical that the sensor be allowed to reach temperature equilibrium with the solution in order to provide the highest accuracy.

When moving the sensor between widely different temperature conditions, it may be necessary to allow the sensor to stabilize as much as one hour before the calibration sequence is initiated. If the sensor is online, the user may want to set the output *HOLD* (see *"Diagnostics Menu [DIAG]" on page 20*) feature prior to calibration to lock out any output fluctuations.

Procedure

1. Scroll to the *CAL* menu section using the **MENU** key and press **ENTER** or the **UP** arrow key.
2. Press the **UP** arrow key until *Cal Temp* is displayed.
3. Press the **ENTER** key. The message "Place sensor in solution then press ENTER" displays. Move the sensor into the calibration reference (if it hasn't been moved already) and wait for temperature equilibrium to be achieved. Press **ENTER** to begin the calibration sequence.
4. The calibration data gathering process begins. The message "Wait" flashes as data is accumulated and analyzed. The *°C* or *°F* symbol may flash periodically if the reading is too unstable.
5. The message "Adjust temp value then press ENTER" displays, and the rightmost digit begins to flash, indicating that the value can be modified. Using the **UP** and **LEFT** arrow keys, modify the value to the known ref solution temperature. Adjustments up to ±5° C from the factory calibrated temperature are allowed. Press **ENTER**.
6. Once completed, the display indicates "PASS" or "FAIL". If the unit fails, the temperature adjustment may be out of range, the sensor may not have achieved complete temperature equilibrium or there may be a problem with the temperature element. In the event of calibration failure, it is recommended to attempt the calibration again immediately.

SYSTEM MAINTENANCE

System Checks

1. If the "FAIL" icon is flashing on the display, check the *Fault List* to determine the cause of the failure. To access the *Fault List*, press the **MENU/ESC** key until the *DIAG* menu appears. Then press the **UP** arrow key until the *Fault List* appears. Press the **ENTER** key to access the *Fault List*, and the highest priority fault message displays. For a list of all messages and possible causes/solutions, see *"Display Messages" on page 28*.
2. Perform a one-point calibration prior to sensor installation.
3. Check sensor cable color to terminal strip markings.
4. For highly unstable behavior, remove sensor from the process and measure the process solution in a plastic beaker. If the reading now stabilizes, place wire in beaker solution and actual process solution to determine if a ground loop exists.

Instrument Checks

1. Remove sensor completely and connect 1100 Ohms from the yellow to black sensor input leads. Make sure the unit is configured for a Pt1000 thermal element and that the temperature is not in manual locked mode. The temperature reading should display approximately 25° C and the conductivity reading should display approximately 0.0 µS.
2. With a DMM, measure the DC voltage from the white sensor lead connection to the black sensor lead connection. With the positive DMM lead on the white wire, the meter should read between –4.5…–5.5V DC.

Cleaning the Sensor

Keep the sensor as clean as possible for optimum measurement accuracy. Frequency of cleaning depends upon the process solution.

Wipe the measuring end of the sensor with a fine abrasive cloth (for example, Scotchbrite or equivalent). Then rinse with clean water (distilled or de-ionized if possible). This should remove most contaminate buildup.

If necessary, soak the sensor for several minutes in a mild soap solution. Use a small, extra-soft bristle brush (such as a mushroom brush) to thoroughly clean the electrode surfaces. If surface deposits are not completely removed after performing this step, a dilute acid may be used to dissolve the deposits. Soak for a few minutes, then rinse the sensor thoroughly with clean water (distilled or de-ionized if possible).

NOTE: DO NOT soak the sensor in dilute acid solution for more than 5 minutes.

⚠ WARNING

ACIDS ARE HAZARDOUS. ALWAYS WEAR EYE AND SKIN PROTECTION WHEN HANDLING. FOLLOW ALL MATERIAL SAFETY DATA SHEET RECOMMENDATIONS. A HAZARDOUS CHEMICAL REACTION CAN BE CREATED WHEN CERTAIN ACIDS COME IN CONTACT WITH PROCESS CHEMICALS. MAKE THIS DETERMINATION BEFORE CLEANING WITH ANY ACID, REGARDLESS OF CONCENTRATION. DO NOT USE HYDROCHLORIC ACID ON ANY STAINLESS STEEL PORTION OF THE SENSOR.

After cleaning the sensor, check measurement and re-calibrate the sensor.

Troubleshooting

The first step in resolving any measurement problem is to determine whether the trouble lies in the sensor or the transmitter. Since measurement problems can often be traced to foulants coating the electrodes, cleaning the sensor using the method outlined in *"Cleaning the Sensor" on page 26* should always be the first step in any troubleshooting.

If the sensor cannot be calibrated after cleaning, perform the following test. A multimeter is needed.

1. Disconnect the sensor from the transmitter or junction box.
2. Using a multimeter, verify continuity between electrodes (indicated below) and the corresponding wire colors in the cable (red, blue, green and white, only).

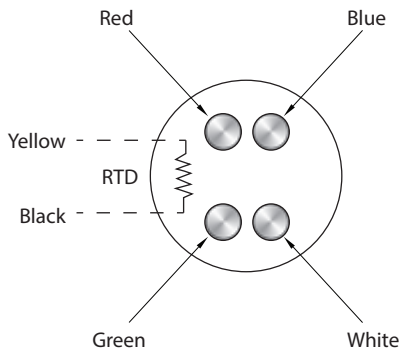

Figure 7: Sensor face

3. Verify that the sensor's temperature element (Pt1000 RTD) is functioning properly by measuring the resistance between the sensor's yellow and black wires. The nominal resistance value at 25° C is 1097 Ohms. Use the following table as a guide to the approximate resistance value:

°C	RTD
20	1078 Ω
25	1097 Ω
30	1117 Ω
35	1136 Ω

Display Messages

The Q45 Series instruments provide a number of diagnostic messages that indicate problems during normal operation and calibration. These messages appear as prompts on the secondary line of the display or as items on the *Fault List*.

The following messages appear as prompts:

Message	Description	Possible Correction
Max is 200	Entry failed, maximum value allowed is 200.	Reduce value to ≤ 200.
Min is 20	Entry failed, minimum value allowed is 20.	Increase value to ≥ 20.
Cal Unstable	Calibration problem, data too unstable to calibrate.	Clean sensor, get fresh cal solutions, allow temperature and conductivity readings to fully stabilize, do not handle sensor or cable during calibration.
Slope HIGH	Sensor slope from calibration is greater than 110%.	Get fresh cal solutions, allow temperature and conductivity readings to fully stabilize, check for correct buffer values.
Slope LOW	Sensor slope from calibration is less than 80%.	Clean sensor, get fresh cal solutions, allow temperature and conductivity readings to fully stabilize, check for correct buffer values.
Out of Range	Input value is outside selected range of the specific list item being configured.	Check manual for limits of the function to be configured.
Locked!	Transmitter security setting is locked.	Enter security code to allow modifications to settings.
Unlocked!	Transmitter security has just been unlocked.	Displayed just after security code has been entered.
TC-F25 lock!	The TC selection is in F25 mode, locked at 25° C.	Calibration and TC adjustment cannot be performed while the TC is in F25 mode. To allow access to TC calibrations, change TC mode from F25 (fixed 25) to SENS (sensor).

The following messages appear as items on the *Fault List*:

Message	Description	Possible Correction
Sensor High	The raw signal from the sensor is too high.	Check wiring connections to sensor.
Sensor Low	The raw signal from the sensor is too low.	Check wiring connections to sensor.
Cond too High	The conductivity reading is > 2000 mS.	The conductivity reading is over operating limits.
Temp High	The temperature reading is > 210° C.	The temperature reading is over operating limits. Check wiring and expected temp level. Perform RTD test as described in sensor manual. Recalibrate sensor temperature element if necessary.
Temp Low	The temperature reading is <–10° C.	The temperature reading is under operating limits. Check wiring and expected temp level. Perform RTD test as described in sensor manual. Recalibrate sensor temperature element if necessary.
TC Error	TC may be open or shorted.	Check sensor wiring and perform RTD test as described in sensor manual.
Clean Sensor	Foulants on sensor have reached the level that they cannot be adjusted out.	Clean the sensor thoroughly.
Cond Cal Fail	Failure of conductivity calibration.	Clean sensor, get fresh cal solutions and redo calibration. If still failure, sensor slope may be less than 50%. Perform sensor tests as described in sensor manual. Replace sensor if still failure.
TC Cal Fail	Failure of temperature calibration.	Clean sensor, check cal solution temperature and repeat sensor temp calibration. TC calibration function only allows adjustments of +/- 6° C. If still failure, perform sensor tests as described in sensor manual. Replace sensor if still failure. **NOTE:** TC offset may also be adjusted using the *Cal TC Factor* function (see *"Calibration Menu [CAL]" on page 17*) which involves no calibration reference solutions.
EEprom Fail	Internal non-volatile memory failure.	System failure, consult factory.
Chcksum Fail	Internal software storage error.	System failure, consult factory.
Display Fail	Internal display driver fail.	System failure, consult factory.
Range Cal Fail	Failure of factory temperature calibration.	Consult factory.

SPARE PARTS

Part No.	Description
*	Portable Conductivity Monitor, 3V DC, w/ two 0…2.5V Outputs
07-0055	4-electrode PEEK Sensor
07-0090	4-electrode PEEK Sensor w/Connector
09-0046	Conductivity Standard - 84 microSiemens, 500 mL
09-0047	Conductivity Standard - 447 microSiemens, 500 mL
09-0048	Conductivity Standard - 1,500 microSiemens, 500 mL
09-0049	Conductivity Standard - 8,974 microSiemens, 500 mL
09-0050	Conductivity Standard - 80,000 microSiemens, 500 mL

* Please consult the factory for electronic assembly part number.

Lock/Unlock Code: 1453

INTENTIONAL BLANK PAGE

Trademarks appearing in this document are the property of their respective entities. Due to continuous research, product improvements and enhancements, Badger Meter reserves the right to change product or system specifications without notice, except to the extent an outstanding contractual obligation exists. © 2024 Badger Meter, Inc. All rights reserved.