Cox
Turbine Flow Meters

# Flow Processor

## IFC15BBA

## DESCRIPTION

The Cox IFC15BBA Flow Processor is a programmable electronic processor, providing total compensation to enhance flow meter accuracy, while extending the linear flow range. Packaging is provided for remote, direct or embedded mounting to support most installation or application requirements.

The compact design includes both single and bidirectional dual frequency inputs from 10 Ohm pickups, as well a thermistor input. The IFC15BBA processor tracks all variables to compensate for viscous and inertial effects, using proven Strouhal-Roshko algorithms. Enhanced digital signal processor technology allows for exceptional signal characterization using a 32-bit floating point processor at 150 MHz, capable of producing a 1 millisecond speed of response.

| Features | Benefits |
|---|---|
| Rotor blade pulse averaging | Enhanced low-flow resolution and output smoothing |
| Strouhal-Roshko computation, using 16-bit resolution | Dynamic response to changing conditions with fully compensated output |
| Dual outputs provide both frequency and analog signals | Easily interfaces to data acquisition or control system |
| Internal amplifier and signal conditioners | No need for additional amplifiers or signal conditioners, yielding cost savings |
| Assignable outputs | User assigned output variables allows for greater ease of system integration |

## APPLICATIONS

Meeting the demanding requirements of the aerospace, automotive, industrial processing, and test and measurement industries, the IFC15BBA processor provides significant improvements in flow meter performance under varying process conditions. The processor thrives in, but is not limited to, the following applications:

- Precision monitoring
- Engine test cells and test stands
- On-board automotive and aerospace testing
- Control loops
- Custom OEM flight and commercial applications

## MODEL NUMBERS

| Description | Part Number |
|---|---|
| Remote 6-pin, 10-pin connectors | IFC15BBA-4-RT-4-C |
| Remote 8-pin, 14-pin connectors Compatible with EC80 cables | IFC15-R-RM1 |
| Integral mount, flying leads Compatible with EC80 cables | IFC15-R-XP1 |
| Integral mount, flying leads | IFC15BBA-4-RT-4-X |

## PRINCIPLE OF OPERATION

The IFC15BBA flow computer reads the signals from one or two pickups on a turbine meter, such as a Cox dual rotor meter, and compensates for varying fluid and viscosity conditions. Fully compensated and linearized volumetric flow rates, totals and temperature are examples of flow parameters that can be selected as outputs or viewed through serial communications, included software program or an embedded rate indicator (depending on product configuration).

Varying fluid temperature and viscosity conditions can be compensated for by means of a universal viscosity curve. In addition, Strouhal-Roshko algorithms are applied for a more comprehensive compensation method, taking into consideration all the secondary effects to which the meter is sensitive, like the expansion and contraction of the meter bore diameter. Inferred mass flow rate is achieved by extracting the density value of a known fluid from a stored temperature/density table, which is multiplied by the volumetric flow rate. When the quadrature inputs are applied, the IFCL15BBA processor can measure bidirectional flow.

Badger Meter

CXX-DS-04209-EN-01 (February 2023)

Product Data Sheet

# DIMENSIONS

## IFC15BBA-4-RT-X Integral Mount
## IFC15-R-XP1

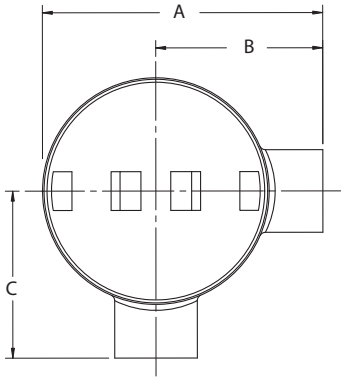


Front View

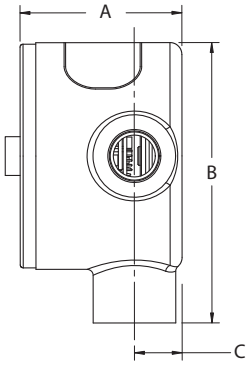


Side View

| | Front View | Side View |
|---|---|---|
| **A** | 4.70 in. (119.38 mm) | 2.71 in. (68.83 mm) |
| **B** | 2.80 in. (71.12 mm) | 4.70 in. (119.38 mm) |
| **C** | 2.80 in. (71.12 mm) | 0.80 in. (20.32 mm) |

## IFC15BBA-4-RT-C Remote
## IFC15-R-RM1 Remote

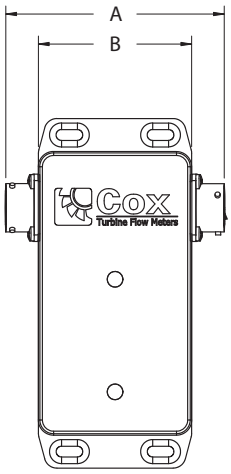


Front View

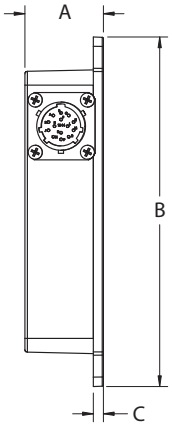


Side View

| | Front View | Side View |
|---|---|---|
| **A** | 3.40 in. (86.36 mm) | 1.22 in. (30.99 mm) |
| **B** | 2.38 in. (60.45 mm) | 5.43 in. (137.92 mm) |
| **C** | — | 0.16 in (4.06 mm) |

## SPECIFICATIONS

| | | |
|---|---|---|
| **Performance** | **Linearized Frequency** | ± 0.1% of reading |
| | **Linearized Analog Output** | ± 0.1% of full scale |
| | **Process Latency** | 100 µs |
| **Input Power** | **Nominal** | 9…32V DC |
| **Temperature Environment** | **Operating** | –40…185° F (–40…85° C) |
| | **Storage** | –67…257° F (–55…125° C) |
| | **Humidity** | 0…80% RH, non-condensing |
| **Flow Meter Input Type (A and B/Quadrature) (Two Independent Channels)** | **RF Carrier** 10 Ohm Pickup | Carrier frequency range: 25…65 kHz |
| | | Frequency range: 5 Hz…5.0 kHz |
| **Temperature Input** | **Type** | Thermistor 10k Ohm |
| | **Usable Range** | –65…365° F (–55…185° C) |
| **Frequency Output (Two Independent Channels)** | **Output** | 0…5V, TTL, 1…20,000 Hz, square wave 50% duty cycle |
| | **Measurement** | Linearized flow rate, raw rotor frequency, summed rotor frequency (dual rotor) or total flow (accumulation) |
| | **Minimum Load Impedance** | 10k Ohm (linearized flow), 5k Ohm (raw flow) |
| **Analog Output** | **Resolution** | 16-bit resolution |
| | **Channel** | 4…20 mA, 0…5V DC or 0…10V DC; linearized flow rate or temperature |
| | **Load Impedance (4…20 mA)** | 500 Ohms maximum |
| **EIA-485 Serial Data** | **Baud** | 115k |
| | **Update Rate** | Selectable, 0.1 sec minimum |
| | **Data Bits** | 8 |
| | **Stop Bit** | 1 |
| | **Parity** | None |
| **Enclosure Environmental Rating** | **Blind Remote** | Aluminum enclosure with MS Connectors, weatherproof mounting flange |
| | **Remote with Rate Indicator** | Aluminum enclosure with MS Connectors, weatherproof mounting flange |
| | **Blind Integral** | NEMA 4 (IP65) with 1/2 in. NPT<br>Class 1, Groups C and D<br>Class 2, Groups E, F and G<br>Class 3, WET LOC — Cast Aluminum |
| **Rate Indicator** | **Display** | 8 digits, 0.46 in. (11.7 mm) high digits, transmissive LCD with green/red LED backlight |
| **Remote Cable Length** | **Flow Meter to IFC15BBA** | 10 ft (3 m) |
| | **IFC15BBA to DAQ or Control System** | 100 ft (30.5 m) |
| **Software** | Conforms to SAE ARP4990 calculations for temperature | |

**Control. Manage. Optimize.**

Cox Instruments is a registered trademark of Badger Meter, Inc. Other trademarks appearing in this document are the property of their respective entities. Due to continuous research, product improvements and enhancements, Badger Meter reserves the right to change product or system specifications without notice, except to the extent an outstanding contractual obligation exists. © 2023 Badger Meter, Inc. All rights reserved.

**www.badgermeter.com**