Flow Sensors

Hot Tap Flow Sensors

Series 225/226

DESCRIPTION

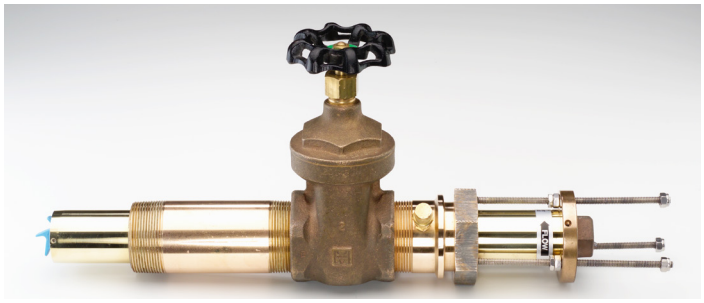

Series 200 hot tap style liquid flow sensors from Badger Meter are designed for cases where pipelines are in continuous service, and depressurizing or draining the system is not practical.

Series 200 flow sensors can be installed either in a depressurized pipe by hand, or "hot tapped" into a pressurized pipeline. Both installation procedures are included in this document. The flow sensor removal procedure is also included.

Refer to the *Series 200 Hot Tap Flow Sensor Product Data Sheet*, available in the Resource Library at *www.badgermeter.com*, for specifications and additional information.

⚠CAUTION

IF THERE IS ANY POSSIBILITY THAT THE PIPE COULD BE FULL OR PRESSURIZED, FOLLOW THE PROCEDURE TITLED "INSTALLING INTO A PRESSURIZED PIPELINE WITH THE HTT" ON PAGE 3.

S'IL EXISTE LA MOINDRE POSSIBILITÉ QUE LA TUYAU PUISSE ÊTRE PLEIN OU SOUS PRESSION, SUIVRE LA PROCÉDURE INTITULÉE « INSTALLATION DANS UNE CONDUITE SOUS PRESSION », PAGE 3.

SENSOR ASSEMBLY DEPTH AND ALIGNMENT

The insertion depth and the alignment of the flow sensor assembly are critical to the accuracy of the flow measurement. The flat end of the flow sensor sleeve assembly must be installed 1-1/2 in. (38 mm) from the inside wall of the pipe. To allow for variations in wall thickness, lining or coatings, the depth adjustment is controlled by the position of the hex nuts on the three threaded studs of the hex mounting adapter. The hex mounting adapter is provided with a 2 in. (51 mm) male NPT connection. Both gate and ball valve units are provided with 2 in. (51 mm) nipples for mounting onto saddles and weld-o-lets.

Setting the Depth

1. Position the hex nuts 14-7/8 in. (38 cm), minus the thickness of the pipe, from the outside diameter of the pipe.

   For example, measure the wall thickness of the pipe from the coupon removed when the 1-7/8 in. (48 mm) hole is cut into the pipe. If the pipe is 1/8 in. (3 mm) thick, subtract 1/8 in. (3 mm) from 14-7/8 in. (38 cm). In this example, you would position the hex nuts 14-3/4 in. (375 mm) from the outside diameter of the pipe. This allows the 16-3/8 in. (42 cm) sensor to be inserted 1-1/2 in. (38 mm) into the pipe.
2. Apply anti-seize thread lubricant (supplied with the sensor) to the threaded studs of the mounting adapter.

Aligning the Impeller With the Flow

1. Align the two sight holes located at the top of the flow sensor sleeve assembly with the center line of the pipe.

   Make sure the alignment is made to the pipe and not to a wall or surface near the sensor.
2. To adjust, loosen the two set screws in the positioning collar with a 3/32 in. Allen wrench (supplied in the installation kit).
3. Slip one end of the 1/4 in. (6 mm) x 12 in. (31 cm) steel rod (supplied in the installation kit) through the holes in the sensor sleeve.
4. Rotate the sensor sleeve until the rod is centered on the pipe. Make sure the flow label arrow on the sensor matches the liquid flow direction.
5. Tighten the positioning collar Allen screws to lock the flow sensor sleeve assembly in position.

   NOTE: As a backup to the flow direction arrow label on the sleeve assembly, there is a smaller hole located beside one of the sight holes in the sleeve to also indicate the upstream side of the assembly.

INSTALLING INTO A DEPRESSURIZED AND DRAINED PIPE BY HAND

Refer to *Figure 1* for the location and/or identification of the parts described in this document.

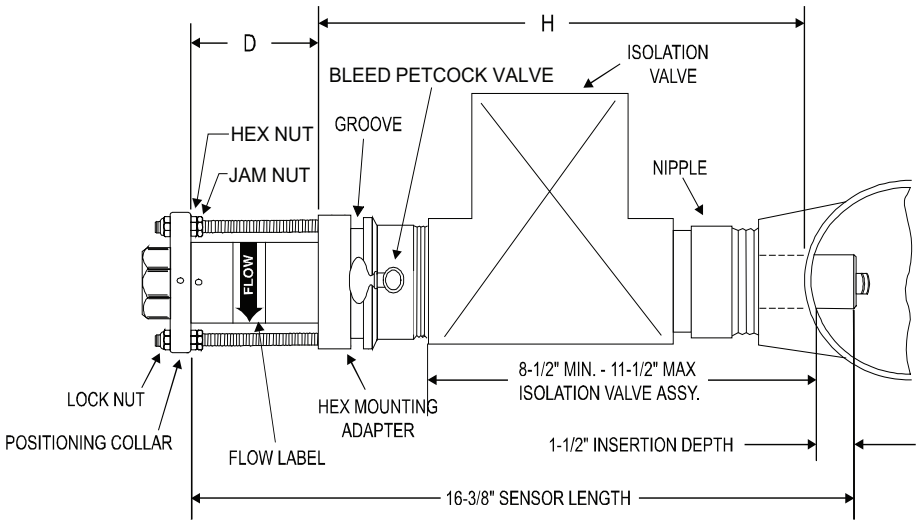

Figure 1: Pipeline installation

NOTE: Dimensions are for reference only. To remove the flow sensor, there must be 35in. of clearance above the outside wall of the pipe. A cutting tool may require additional clearance.

To install the hot tap flow sensor sleeve assembly into a depressurized and drained pipe, follow these steps.

NOTE: If the pipe could be full or pressurized, go to *"Installing Into a Pressurized Pipeline with the HTT" on page 3*.

1. Drill or cut a hole in the pipe with a 1-7/8 in. (48 mm) drill or hole saw.

   Note the pipe wall thickness for use in calculating the sensor assembly depth. A location on the top of the pipe is best for overall performance and service life. However, any radial location on the top half of the pipe is acceptable. Allow a minimum of 10 pipe diameters upstream and 5 pipe diameters downstream from the sensor of straight, unobstructed pipe to allow full development of the flow profile.
2. Install either a service saddle or welded pipe fitting (2 in. female NPT) on the outside diameter of the pipe over the 1-7/8 in. (48 mm) hole.
3. Install the Badger Meter isolation valve and nipple onto the fitting. Apply pipe-thread sealant or Teflon® tape on all threads.
4. Install the hex mounting adapter onto the valve assembly. Apply pipe-thread sealant on the adapter.
5. Tighten the hex mounting adapter so that no stud is aligned with the center line of the pipe. This could interfere with the final sensor alignment.
6. Measure the depth and set the height of the nuts of the hex mounting adapter.

   NOTE: Badger Meter recommends that you purchase a Hot Tap insertion/removal Tool (Model HTT) for future service, even if the sensor is installed in a drained system. The Model HTT allows you to remove the sensor sleeve assembly from the pipe line without draining the entire loop where the sensor is mounted. See *Figure 2*.
7. In a fully depressurized and drained pipe, you can install the flow sensor sleeve assembly by hand. If reinstalling into a drained system thought to have been depressurized and drained, verify by very slowly opening the isolation valve.
   a. ***Carefully and very slowly open the isolation valve to relieve any pressure that may have built up.***
   b. Fully open the isolation valve.
   c. Push the sensor sleeve into the pipe with a slight twisting motion.
   d. Guide the sensor collar holes over the three hex adapter studs until the collar rests on the nuts. Hex nuts should have been previously set to the correct height.
   e. Install the three lock nuts onto these studs at the top of the positioning collar and securely tighten.
8. Loosen the two set screws in the positioning collar with a 3/32 in. Allen wrench.
9. Align the sensor sight holes along the pipe axis using the alignment rod provided in the installation kit supplied with the sensor.
10. Verify that the flow label arrow on the sensor matches the liquid flow direction inside the pipe.

11. Tighten the positioning collar set screws.

NOTE: As a backup for the flow label arrow, there is also a small hole located beside one of the sight holes to indicate the upstream side of the sensor.

INSTALLING INTO A PRESSURIZED PIPELINE WITH THE HTT

Model HTT (Hot Tap Tool)

The Model HTT (Hot Tap Tool) provides the mechanical advantage required to safety insert and remove a Badger Meter hot tap flow sensor from line pressure, and provides a restraint when removing the sensor from a pressurized pipe.

Refer to *Figure 2* for the identification and location of the HTT parts described in this document.

For pipe sizes 2-1/2 in. and larger, insert all Badger Meter sensors 1-1/2 in. (38 mm) from the inside wall of the pipe. The insertion depth is controlled by the position of the sensor hex nuts on the three threaded rods.

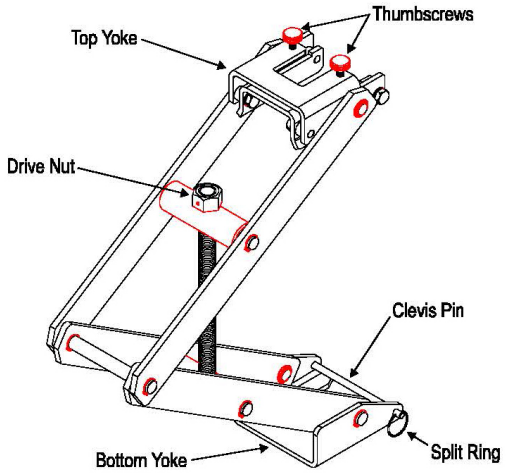

Figure 2: Model HTT (Hot Tap Tool)

To calculate the distance (D) between the top of the sensor hex mounting adapter and the bottom of the positioning collar (the top of the hex nut), **ADD** the H dimension, pipe wall thickness, and insertion depth, and **SUBTRACT** the total from the overall sensor length. See the example and formula below, and refer to *Figure 1*.

Example: The sensor is installed in an 8 in. schedule 80 pipe, with a pipe wall thickness of 1/2 in. If the overall sensor length is 16-3/8 in. and the H dimension is 10 in., the D value is calculated as follows:

D = Overall length – (H + pipe wall thickness + Insertion Depth)

D = 16-3/8 in. – (10 in. + 1/2 in. + 1-1/2 in.)

D = 16-3/8 in. – 12 in.

D = 4-3/8 in.

To install the hot tap flow sensor assembly into a pressurized pipeline with the Model HTT, follow these steps. Use *Figure 1 and Figure 2* for reference.

1. Set one set of hex/jam nuts so that the distance between the top surface of the hex nut and the top surface of the hex mounting adapter is equal to the D dimension calculated above.
2. Adjust the other two sets of hex/jam nuts 1-1/2 in. (38 mm) below the first jam nut, to allow clearance for the HTT top yoke.
3. Fully extend the HTT by turning the drive nut counterclockwise with a 15/16 in. socket or box wrench (customer supplied) until the drive nut contacts the tool. Slide the positioning collar into the tool top yoke.
4. Remove the split ring and clevis pin from the HTT and slide the tool bottom yoke into the groove on the sensor hex mounting adapter. Secure by replacing the clevis pin and split ring.
5. Mark the sleeve 2-3/4 in. (70 mm) from the impeller end of the metal sleeve. This mark is a stopping point to make sure the impeller/bearing is not damaged.
6. Open the bleed petcock valve on the hex mounting adapter to relieve the pressure resulting from the sensor sleeve insertion.
7. Carefully hand insert the flow sensor sleeve assembly into the hex mounting adapter until the mark lines up with the top of the hex mounting adapter.

   At this point the sleeve will have been inserted past the top two O-rings in the adapter, approximately 1…1-1/4 in. (25…32 mm). Take care not to push the sensor past the mark on the sleeve as the impeller could be damaged if it strikes the closed valve.
8. Rotate the HTT so that the threaded rod with the adjusted hex/jam nuts is centered in the top yoke of the tool.
9. Rotate the flow sensor sleeve so that the positioning collar holes align with the threaded rods. Verify that the flow direction label is in the general direction and that the positioning collar is located in the recessed area of the top yoke.
10. Slide the top yoke of the HTT over the positioning collar and secure by tightening the two thumbscrews on the top of the yoke.

11. Close the bleed petcock valve and slowly open the isolation valve.
12. Slowly turn the 15/16 in. drive nut clockwise to insert the flow sensor sleeve assembly through the valve and into the pipeline.
13. Carefully guide the three threaded studs of the hex mounting adapter through the holes of the flow sensor positioning collar.
14. Carefully lower the flow sensor until the positioning collar contacts the hex nut preset for the correct depth adjustment.
15. Install the three lock nuts onto the threaded rods, tightening only the lock nut on the threaded rod with the preset hex/jam nut.
16. Bring the two remaining lock nuts down until they just contact the positioning collar. Do not tighten at this time.
17. Remove the HTT by loosening the two thumbscrews, removing the clevis pin and then sliding the insertion tool off the sensor. Then bring the two remaining sets of hex/jam nuts up to the underside of the positioning collar and tighten.
18. Align the flow sensor by first loosening the two set screws in the side of the positioning collar with a 3/32 in. Allen wrench.
19. Align the flow sensor sight holes along the pipe axis using the alignment rod (supplied in the installation kit). Verify that the flow label arrow on the flow sensor matches the liquid flow direction inside the pipe.
20. Tighten the positioning collar set screws.

NOTE: As a backup for the flow label arrow, there is a small hole located beside the sight hole on the upstream side of the sensor.

REMOVAL OF SERIES 225/226 FROM A PRESSURIZED PIPELINE WITH THE HTT

⚠WARNING

DO NOT REMOVE THE LOCK NUTS FROM THE THREADED RODS ABOVE THE POSITIONING COLLAR WITHOUT THE HOT TAP TOOL CONNECTED. SERIOUS INJURY COULD RESULT.

NE PAS ENLEVER LES ÉCROUS DE BLOCAGE DE TIGES FILETÉES AU-DESSUS DU COL DE POSITIONNEMENT SANS LA HTT CONNECTÉ. POURRAIT ENTRAÎNER DES BLESSURES GRAVES.

Use *Figure 1 and Figure 2* for reference.

1. Adjust the HTT opening by rotating the drive nut with a 15/16 socket or box wrench (customer supplied) until the distance between the top and bottom yoke is approximately equal to the distance between the groove on the hex mounting adapter and the bottom surface of the flow sensor positioning collar.
2. Remove the split ring and clevis pin on the HTT.
3. Slide the HTT bottom yoke into the groove in the hex mounting adapter and secure by replacing the clevis pin and split ring.
4. To permit clearance for the top yoke, lower two of the three pairs of jam nuts under the sensor positioning collar to a minimum of 1-1/2 in. (38 mm) below the positioning collar. Then position the top yoke so the threaded rod with the remaining jam nuts are centered in the yoke. Then slide on the yoke, adjusting with drive nut as necessary.
5. Make sure the positioning collar is located in the recessed area of the yoke by adjusting the drive nut until the top yoke is snug against the bottom of the sensor positioning collar. Then tighten the thumb screws located on the top of the tool.
6. Remove the three lock nuts above the collar and slowly withdraw the flow sensor by rotating the drive nut of the HTT counterclockwise with a 15/16 socket or box wrench until drive nut bottoms out on the tool.
7. Close the gate or ball valve fully.
8. Open the flow sensor bleed valve located on the hex mounting adapter to relieve pressure between the valve and sensor.
9. Once all pressure is relieved, remove the HTT and remove the flow sensor from the hex mounting adapter.

NOTE: For installation using the older hot tap tool, refer to *Series 200 Hot Tap Installation Technical Bulletin #41,* available in the *Resource Library Archive* at *www.badgermeter.com*.

Control. Manage. Optimize.

Data Industrial is a registered trademark of Badger Meter, Inc. Other trademarks appearing in this document are the property of their respective entities. Due to continuous research, product improvements and enhancements, Badger Meter reserves the right to change product or system specifications without notice, except to the extent an outstanding contractual obligation exists. © 2021 Badger Meter, Inc. All rights reserved.

www.badgermeter.com