Preso®
Differential Pressure Flow Meters

Ellipse® Pitot Tube Meter

AR Annular Regular Meter

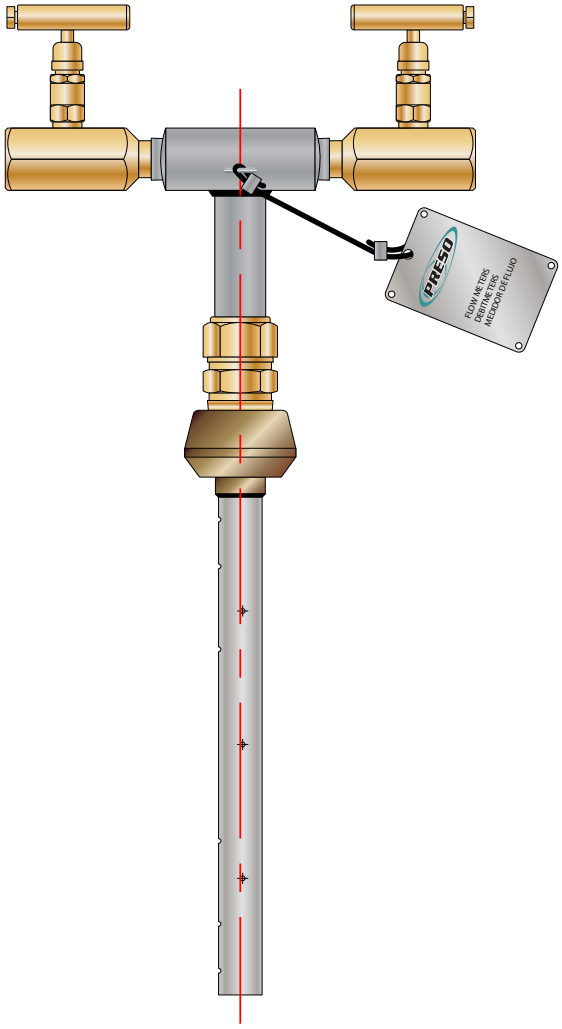

Badger Meter

PTT-UM-00521-EN-03 (August 2021)

User Manual

CONTENTS

Introduction. 3

Specifications 3

Pipe Orientation and Sensor Mounting 4

Installation Instructions, Single Support 5

Installation Instructions, Double Support 6

Location Instructions 7

Flow Curve 8

INTRODUCTION

The Preso elliptical design outperforms and provides greater accuracy than traditional differential pressure flow measurement devices. This differential pressure flow meter is designed with a series of ports facing the upstream velocity pressures, as well as flow sensing ports strategically located ahead of the trailing edge flow separation.

The multi-ported, self-averaging flow element consists of an elliptical shape with two independent flow sensing chambers. The impact velocity sensing holes (high pressure) are located along the leading edge and the true static sensing holes (low pressure) are on the exterior probe side. Model AR comes with instrument shutoff valves with provisions to accept a transmitter or direct indicating meter.

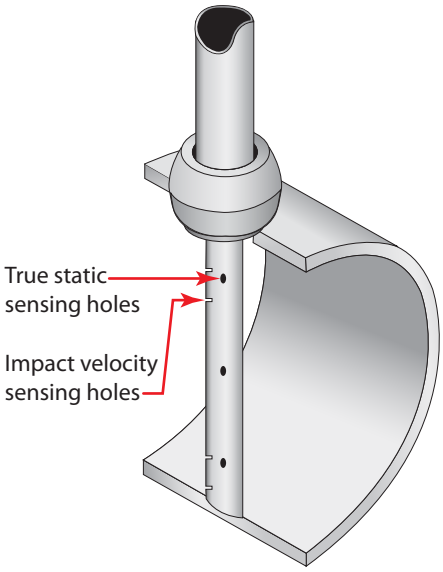

Figure 1: AR pressure sensing holes

SPECIFICATIONS

Applications	Liquids and gases
Pipe Sizes	2…72 in. (50…1820 mm)
Pressure	800 psi (5515 kPa) maximum
Temperature	800° F (426° C) maximum
Accuracy	±0.75% of reading
Turndown Ratio	17:1 with no vacuum effect
Standard Components	T-type head, 316 SS 1/4 in. or 1/2 in. FNPT connection CS compression fitting with SS ferrule CS 3000 lb weld fitting, ASTM A105 316/316L SS Ellipse sensor Instrument valves (2 per sensor), 1/4 in., CS 316 SS ID tag with wire
Reynolds Number	Greater than 75,000 maintains most accurate flow measurements Less than 75,000 consult factory for estimated results
Resonance	If greater than 0.8, use double support

Table 1: Specifications

PIPE ORIENTATION AND SENSOR MOUNTING

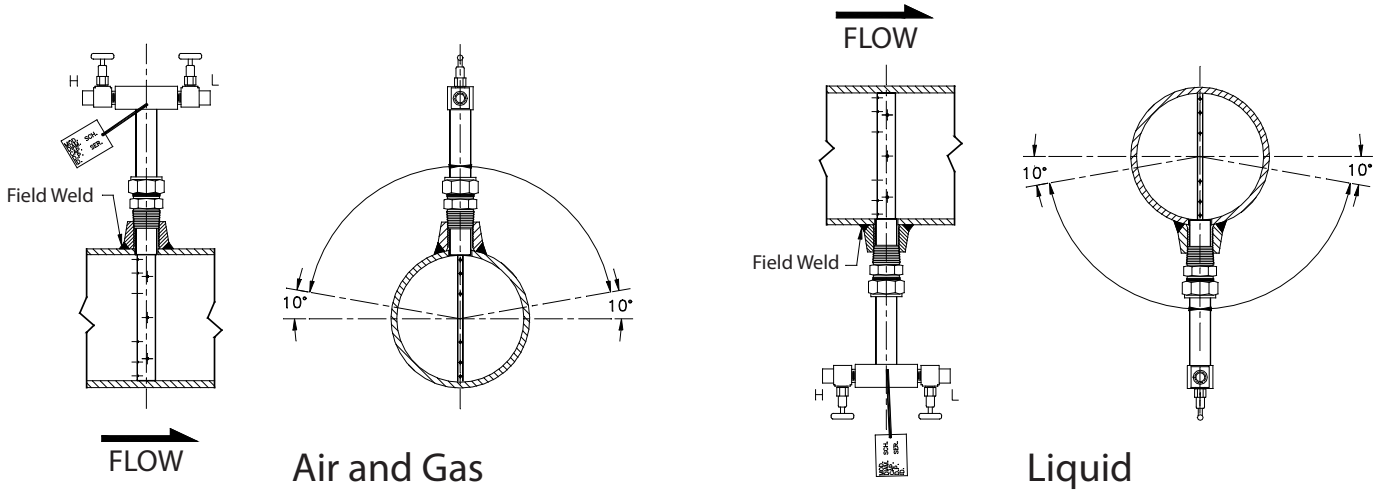

Figure 2: Horizontal pipe installation

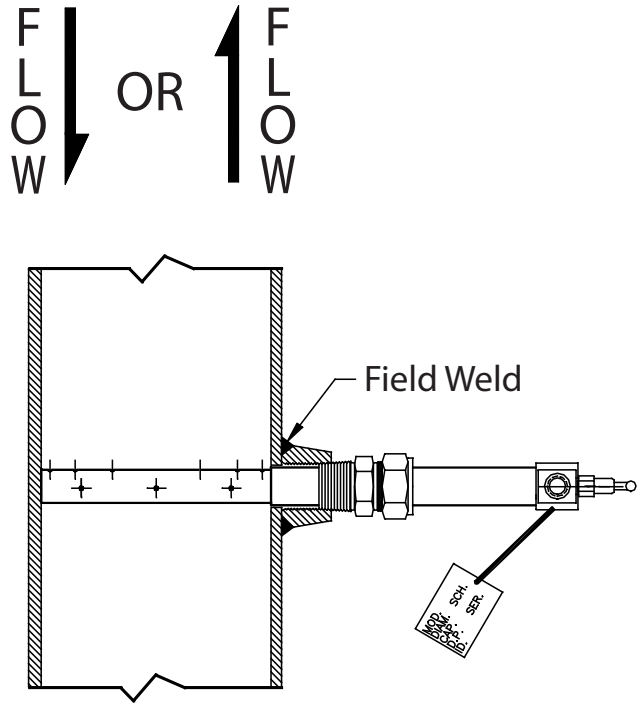

NOTE: Illustration represents installation for downward flow.

Figure 3: Vertical pipe installation

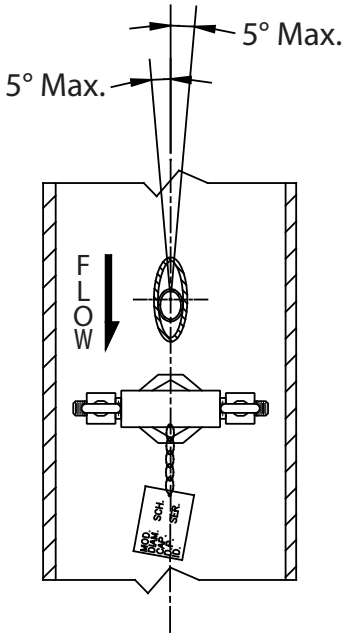

Figure 4: Probe alignment

NOTE: For sensors with transmitter mount head, see the *Ellipse Pitot Tube Meter AR-TT3 User Manual*.

INSTALLATION INSTRUCTIONS, SINGLE SUPPORT

1. Choose the proper location to install the AR Ellipse using AGA/ASME standards (or equivalent). See *"Location Instructions" on page 7*.
2. Grind the surface of the pipe where the AR Ellipse is to be inserted to provide a clean area for welding.
3. Weld the supplied thread-o-let to the pipe using standard codes for your application (1/16 in. weld gap recommended). Take care to protect the threads during the welding process.
4. Drill a hole through the pipe wall according to *Table 2*.

Model / Sensor	Weld Connector	Drill Bit
AR0 (1/2 in.)	1/2 in.	5/8 in.
AR (7/8 in.)	1 in.	1-1/8 in.
AR1 (1-1/4 in.)	1-1/4 in.	1-3/8 in.

Table 2: Single support drill bit size

5. Deburr the hole just drilled, especially on the inside of the pipe.
6. Assemble the supplied compression fitting as diagrammed in *Figure 5*. Thread the assembled compression fitting into the thread-o-let manually. With a wrench, tighten the body of the fitting a further 1-1/4 turns taking care not to tighten the compression nut.
7. Install the instrument valves (optional) at the AR Ellipse head connections. Ensure that the valves are FULLY CLOSED to prevent them from leaking during startup.
8. Insert the AR Ellipse through the compression fitting. Carefully push the sensor by hand further into the pipe until it reaches the opposite wall.
9. While holding the AR Ellipse in its fully inserted position, align the arrow located on the sensor head with the direction of flow. See *Figure 6*.

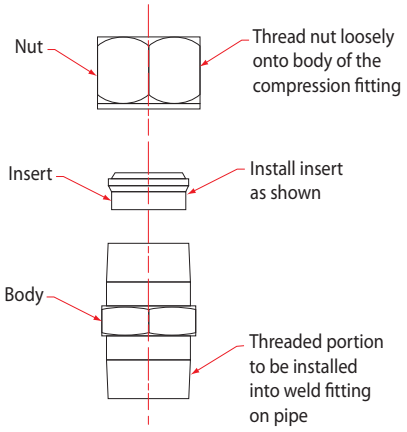

Figure 5: Compression fitting

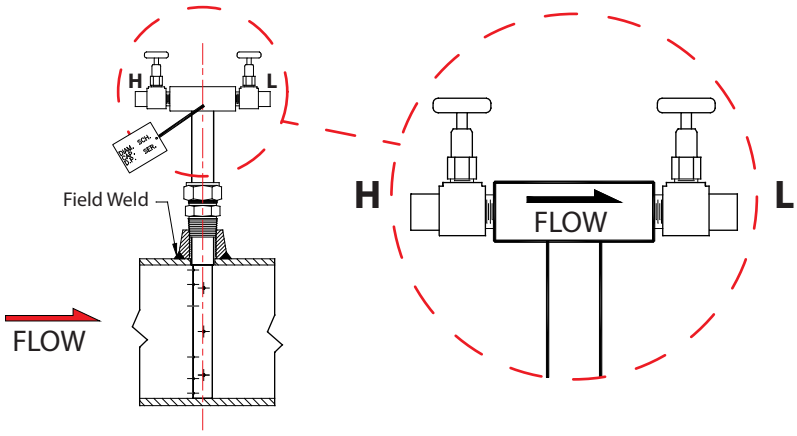

Figure 6: Sensor alignment

10. Thoroughly tighten the compression nut in order to prevent leakage. After tightening the compression nut manually, turn it a further 1-1/4 turns with a wrench.

INSTALLATION INSTRUCTIONS, DOUBLE SUPPORT

1. Follow steps 1 through 7 in *"Installation Instructions, Single Support" on page 5*. At 180° from and on the same plane as the previously drilled hole, grind the surface of the pipe to provide a clean area for welding. Drill a hole and deburr, especially on the inside of the pipe. The hole used for the double support should be sized according to *Table 3*.

MODEL / SENSOR	WELD CONNECTOR	DRILL BIT
AR0 (1/2 in.)	1/8 in.	3/8 in.
AR (7/8 in.)	1/2 in.	1/2 in.
AR1 (1-1/4 in.)	1 in.	7/8 in.

Table 3: Double support drill bit size

2. Weld the double support thread-o-let making sure that it is centered with the drilled hole (1/16 in. weld gap recommended).
3. Install the AR Ellipse sensor through the two holes. Make sure that the double support pin passes through the guide ring. See *Figure 7*.

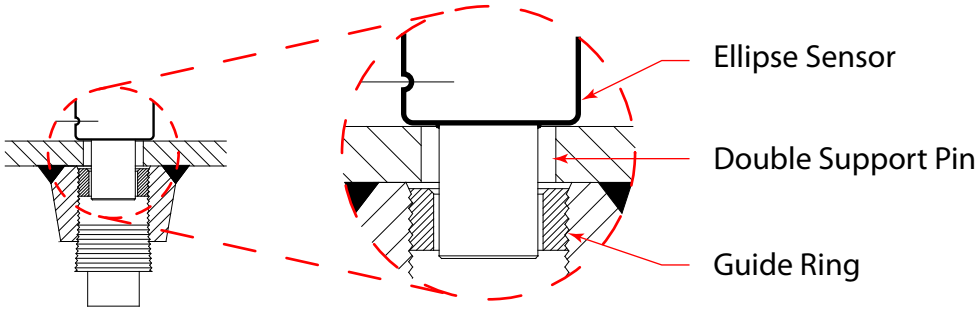

Figure 7: Double support pin

4. Align the arrow located on the sensor head in the direction of flow as in step 9, *"Installation Instructions, Single Support" on page 5*.
5. Ensure that the AR Ellipse is in the correct orientation and spans the inside of the pipe. Tighten the compression nut manually, then tighten it 1-1/4 turns more using a wrench.
6. Install the plug into the end of the double support thread-o-let. Tighten the plug to prevent leakage.

LOCATION INSTRUCTIONS

Straight pipe requirements: Accuracy is affected by the piping configurations due to the disturbances of the flow profile. A fully developed symmetrical flow profile is achieved with the minimum upstream and downstream recommended lengths.

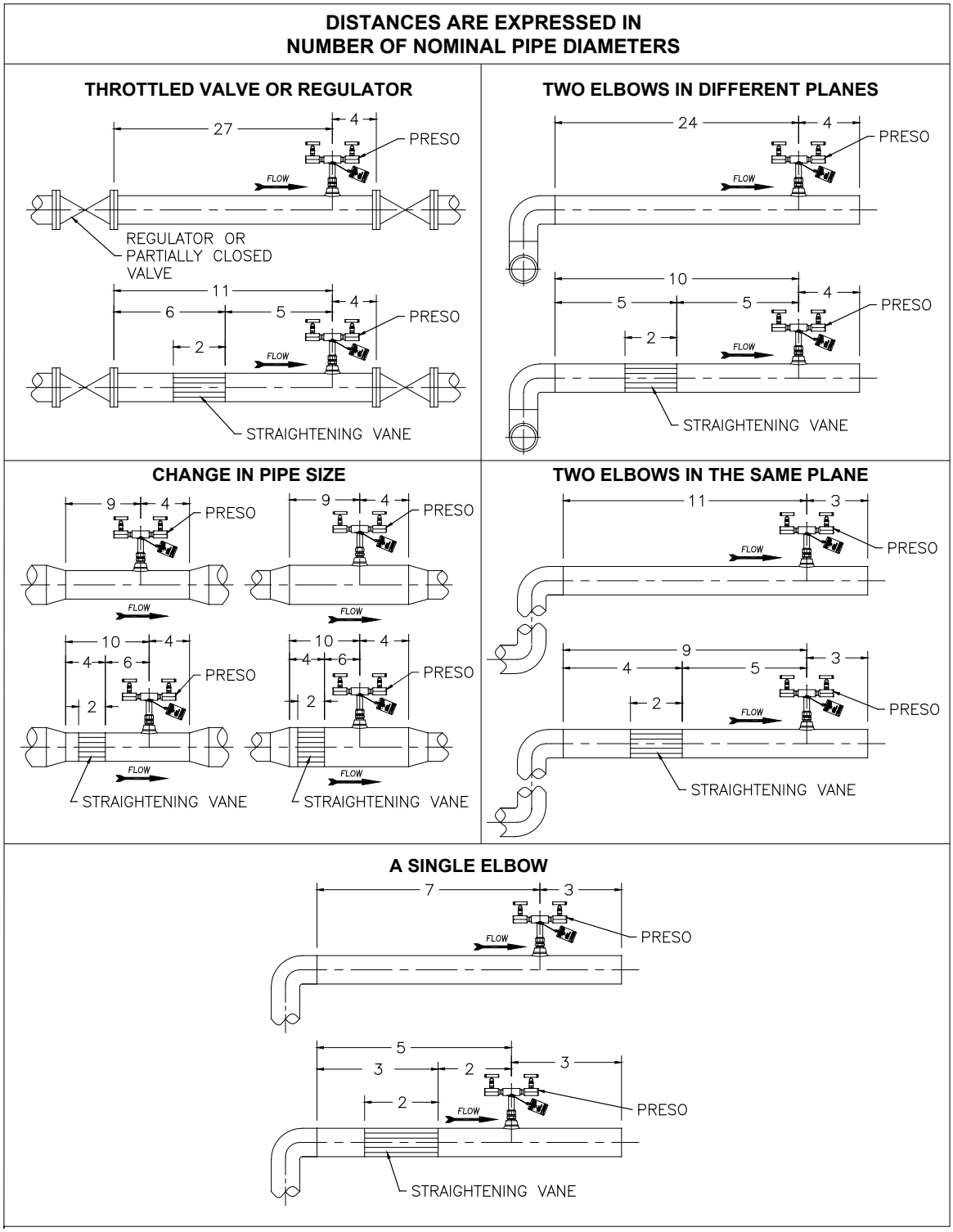

Figure 8: Location instructions

FLOW CURVE

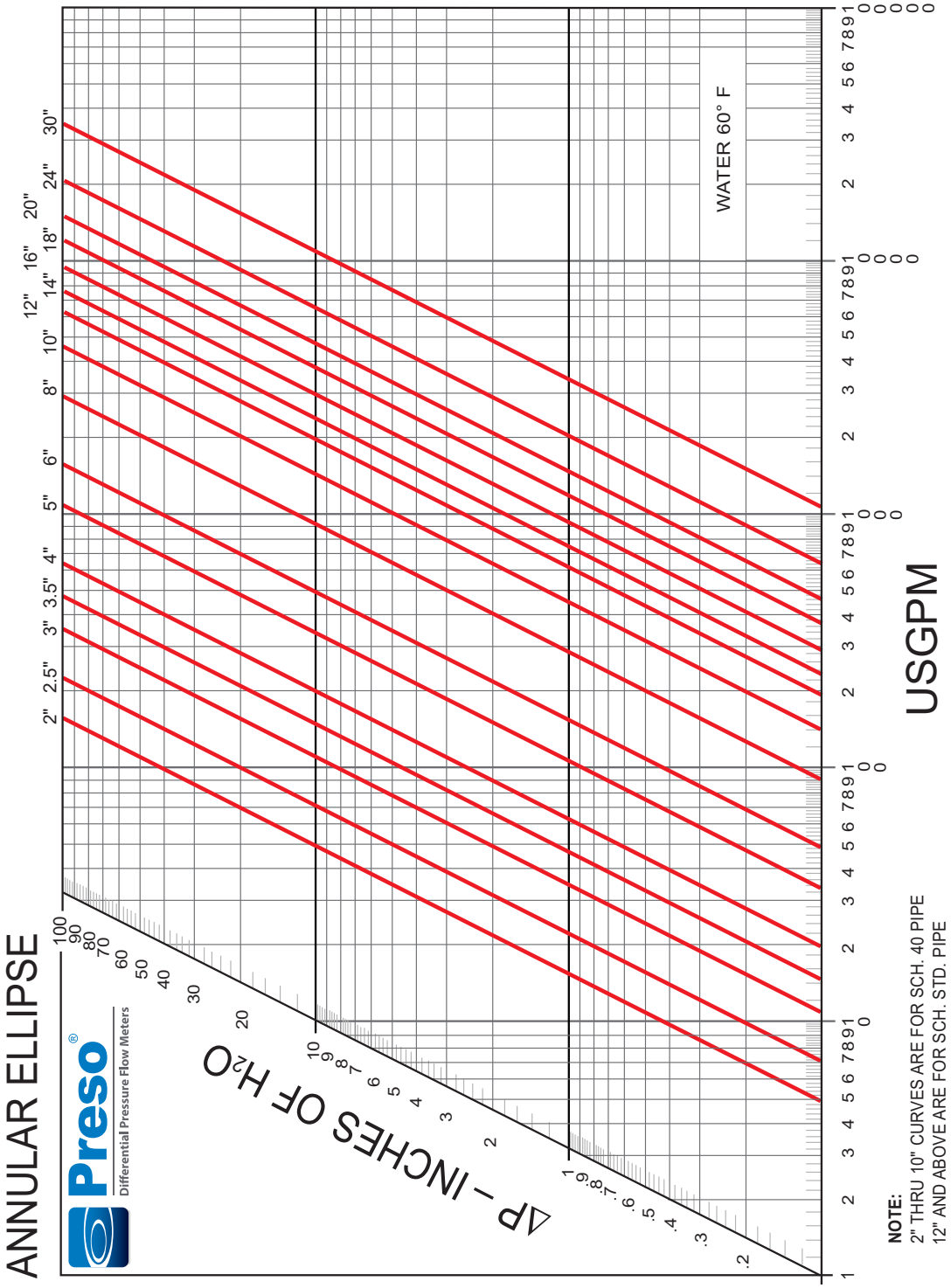

Figure 9: Flow curve

Control. Manage. Optimize.

Preso is a registered trademark of Badger Meter, Inc. Other trademarks appearing in this document are the property of their respective entities. Due to continuous research, product improvements and enhancements, Badger Meter reserves the right to change product or system specifications without notice, except to the extent an outstanding contractual obligation exists. © 2021 Badger Meter, Inc. All rights reserved.

www.badgermeter.com