A Badger Meter® Brand

# Water Quality Monitor

## Model Q46UV Q-Clean System Addendum

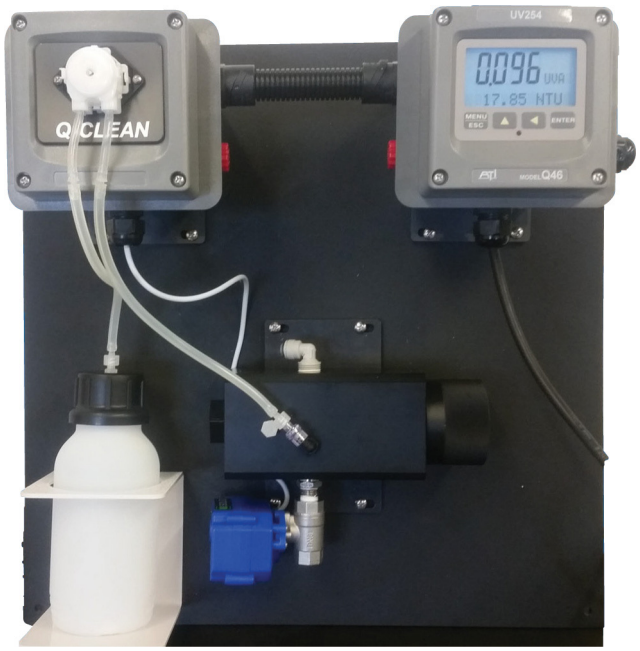


Badger Meter

ATI-UM-04551-EN-03 (September 2025)

# User Manual

# CONTENTS

Introduction . . . . . 3
General . . . . . 3
Standard System . . . . . 3
Cleaner Panel Assembly . . . . . 4
Q-Clean Pump . . . . . 4
Cycle Description. . . . . 4
Cleaning Fluid Mixing . . . . . 5
Electrical Wiring . . . . . 5
Maintenance . . . . . 6
General . . . . . 6
Tube Replacement . . . . . 6
Spare Parts . . . . . 8
Cleaner Pump Assy . . . . . 8
Flow Cell Assy . . . . . 9

# INTRODUCTION

## General

**This manual is a supplement to the manual for the UV-254/Turbidity Monitor. It covers the installation and operation of the Q-Clean automatic sensor cleaning system.**

The Q-Clean is an automatic system that periodically cleans the UV sensor by filling the sensor flow cell with a cleaning chemical. The chemical used is a solution of "Red-B-Gone", which is used to remove iron and manganese buildup. Red-B-Gone is manufactured by Pro Products and an SDS on this chemical is available at: https://proproducts.com/sds-sheets/.

## Standard System

The Q46UV system with chemical cleaner is supplied as an integrated assembly that includes the UV monitor, UV sensor and flow cell assembly, an automatic chemical injection system, a sample flow control valve and a chemical reservoir. All components are mounted on a support panel and the system is ready for operation once it is mounted and sample is connected.

*Figure 1: Standard system*

## Cleaner Panel Assembly

As mentioned previously, Q46UV system with chemical cleaning are supplied already mounted on a 1/4 in. thick HDPE plate. *Figure 2* shows the assemble system with mounting plate dimensions.

Mount the panel in a location that allows easy access for calibration and maintenance.

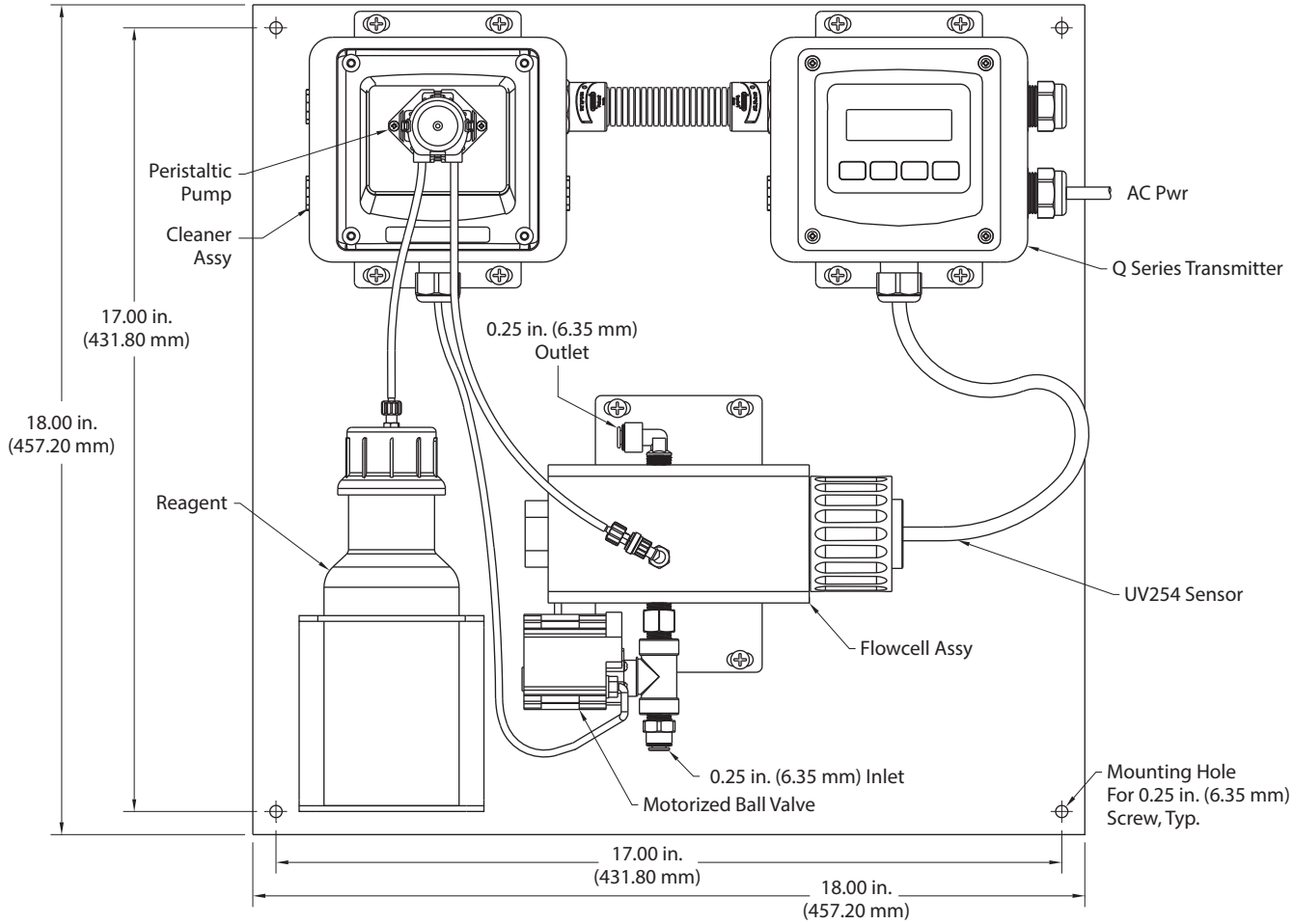


*Figure 2: Q46UV panel with chemical cleaner*

## Q-Clean Pump

The Q-Clean assembly uses a peristaltic pump mounted on the front of a control enclosure. The pump operates for approximately 30 seconds during each cleaning sequence. Pump operating time and the frequency of cleaning are controlled by program settings in the Q46UV and can be adjusted to meet specific application requirements.

A typical cleaning cycle consumes approximately 25 mL of cleaning solution. A 500 mL chemical bottle is supplied and a bottle bracket is mounted to the panel assembly. Cleaning frequency is normally somewhere between once a day and once a week, depending on the severity of fouling. Only through experience can you determine required frequency.

## Cycle Description

When the Q46 monitor calls for a cleaning cycle to begin, the cleaner assembly closes the ball valve, stopping sample flow into the system. Analog outputs and relays in the Q46 are held at pre-cleaning values. Once flow has stopped, the peristaltic pump activates, filling the flow cell with cleaning fluid. After filling, the cleaning solution remains in the flow cell for the programmed time period (normally about 15 minutes) to clean optical surfaces.

At the end of the cleaning period, the ball valve reopens and flushes out the cleaning solution. Analog and relay outputs remain in the "hold" state for the period of time defined in the Q46UV program. Once that time period has expired, outputs update as normal.

## Cleaning Fluid Mixing

The Q-Clean system is supplied with a bottle assembly for holding 500 mL of cleaning solution. The solution must be mixed on site

Disconnect the tube fitting at the top of the cleaner bottle and remove the cap. Fill the bottle 3/4 full of tap water. Add two tablespoons of Red-B-Gone, close the container and mix for 30 seconds. Fill the bottle the rest of the way to the neck of the bottle and replace the cap. Place the bottle in the bottle holder and reconnect the tube fitting.

**NOTE:** The exact amount of chemical is not critical. If using a disposable plastic spoon, simply add 3 or 4 spoonsful. A little extra does no harm and possibly help the cleaning process.

## Electrical Wiring

The Q-Chem pump has two external items connected. A 3-conductor cable connects the Q46UV monitor, and a 2-conductor cable connects the sample inlet control valve. In addition, AC power is connected from the Q46UV with a short power cable. If desired, this can be removed and a separate AC power cord used. *Figure 3* shows electrical terminal connections for the pump system.

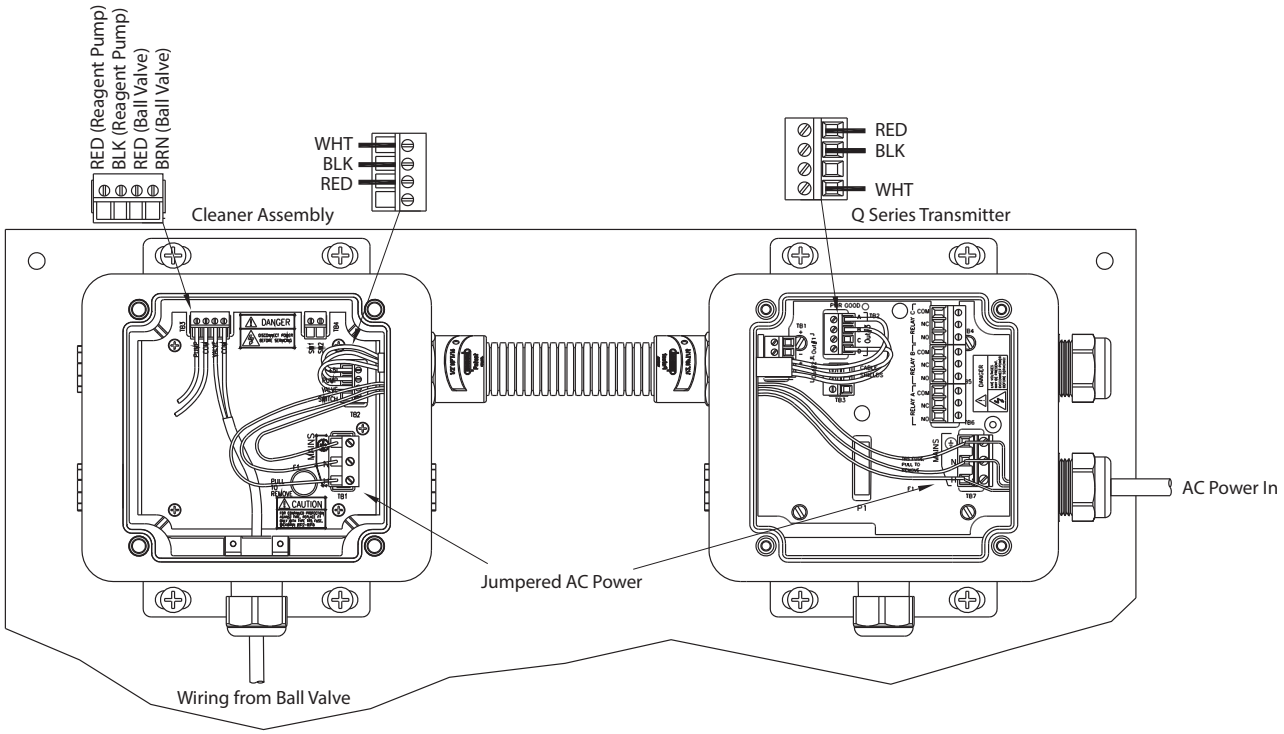


*Figure 3: Q-Chem electrical connections*

# MAINTENANCE

## General

The cleaner system requires very little maintenance. The only maintenance item in the assembly is the peristaltic pump head.

The tubing in the pump is a replaceable part and needs to be changed periodically. The frequency depends on how often cleaning is done. The pump normally runs about 15 seconds during each cleaning cycle. Assuming one cleaning cycle per day, you can probably go a year without problems. As a preventive procedure, replace the peristaltic pump tubing once per year.

The entire pump and pump motor should last 2…3 years or more, again depending on cleaning frequency. The pumps are inexpensive and replacements are available from Badger Meter.

## Tube Replacement

Tube replacement is a simple process. The peristaltic pump head is first removed from the drive by pinching the tabs on either side inward and then pulling the pump head off of the drive shaft.

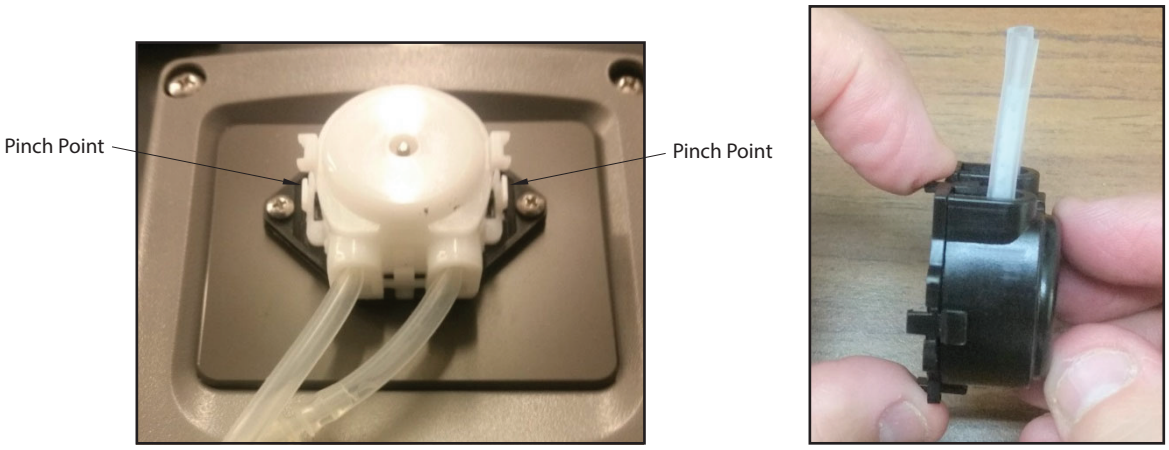


*Figure 4: Removing pump head*

Once you have removed the pump head, pinch in the tabs at the top and bottom as shown in *Figure 4*. The two halves of the plastic assembly separates as shown in *Figure 5*.

Inside the pump is a roller assembly and the tube with retainer clips. Take a new piece of tubing from the spares supplied. Place the retainer clips on the new tube. They should be space exactly 1 in. from each end.

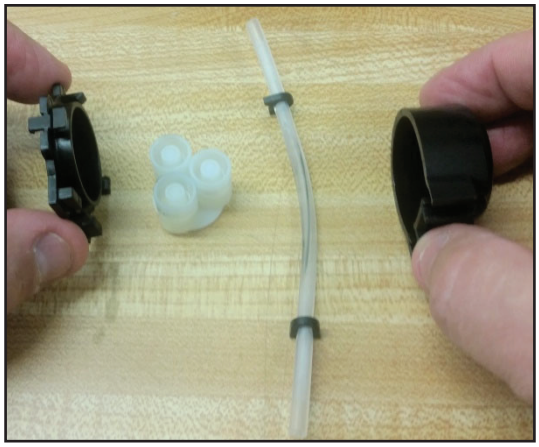

*Figure 5: Seperating pump head*

After clips are in place on the tube, wrap the tube around the roller assembly taking care that the clips line up with the slots in the front plastic housing. The opening in the clips faces outward when inserting into the pump head. Press them into place and then replace the back piece.

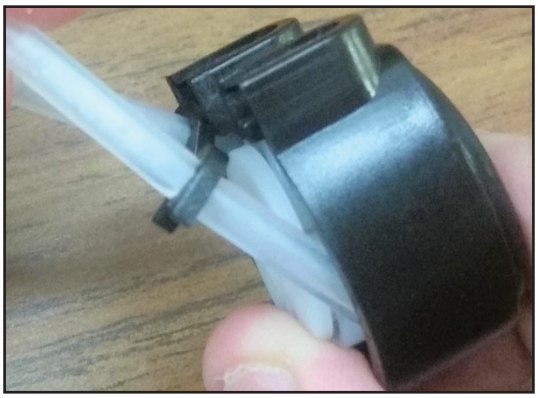

*Figure 6: Assembling pump head*

Once the pump tube is in place, put the pump head back onto the drive shaft and press in until the pinch points click into place so that the pump head is secure.

# SPARE PARTS

## Cleaner Pump Assy

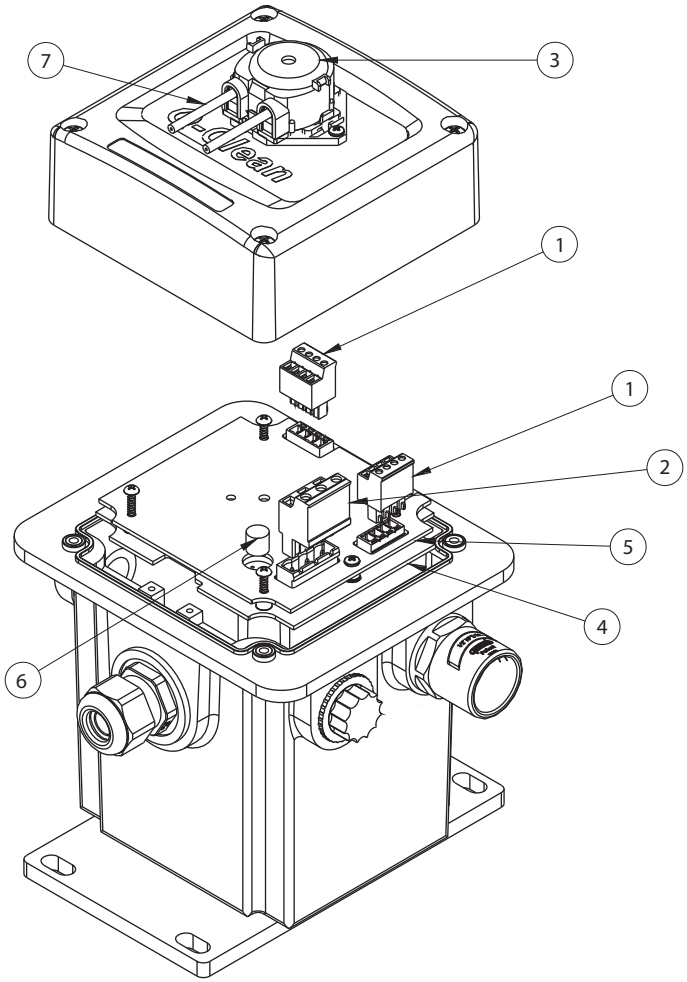


| Item No. | Part No. | Description |
|---|---|---|
| 1 | 38-0073 | Plug, 0.15 in. (3.81 mm), 4-position |
| 2 | 38-0076 | Plug, 0.15 in. (3.81 mm), 2-position |
| 3 | 03-0544 | Spare peristaltic pump assy |
| 4 | 01-0353 | Q-Blast P/S PCB assy |
| 5 | 01-0354 | Q-Blast P/S cover board |
| 6 | 23-0029 | Fuse, 630 mA |
| 7 | 05-0143 | Pump tubing kit |

## Flow Cell Assy

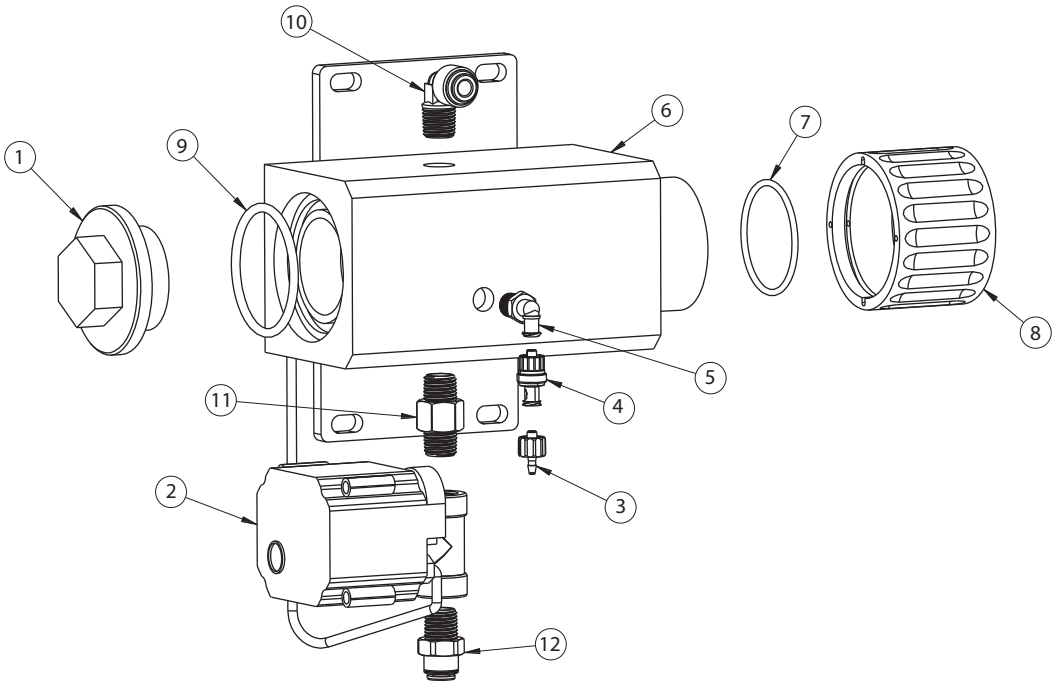


| Item No. | Part No. | Description |
|---|---|---|
| 1 | 45-0398 | Clean out plug |
| 2 | 54-0047 | Motorized ball valve |
| 3 | 44-0386 | Male Luer fitting × 0.093 in. (2.36 mm) barb |
| 4 | 44-0325 | Luer check valve fitting |
| 5 | 44-0387 | Female Luer x 0.125 in. (3.18 mm) NPT |
| 6 | 45-0408 | Flow cell w/cleaner option |
| 7 | 42-0131 | Adapter O-ring, 2-131 |
| 8 | 45-0397 | Flow cell Cap |
| 9 | 42-0037 | Flow cell O-ring |
| 10 | 44-0296 | 1/4 in. NPT × 1/4 in. OD instant elbow fitting |
| 11 | 47-0135 | 1/4 in. S.S. hex nipple |
| 12 | 44-0270 | 1/4 in. NPT x 1/4 in. OD instant fitting |

**INTENTIONAL BLANK PAGE**

**INTENTIONAL BLANK PAGE**

Trademarks appearing in this document are the property of their respective entities. Due to continuous research, product improvements and enhancements, Badger Meter reserves the right to change product or system specifications without notice, except to the extent an outstanding contractual obligation exists. © 2025 Badger Meter, Inc. All rights reserved.