Blancett® Turbine Flow Meters

K-Factor Scalers

Models B220-880 and B220-885

DESCRIPTION

The Blancett K-Factor Scaler converts a low level frequency output (such as that from a Blancett turbine flow meter) into a scaled square wave digital output signal. This adjustable frequency divider converts or scales the turbine meter output into units of measurement needed for a particular application and recognized by almost any data collection device. The K-factor scaler provides an amplified signal, even when a frequency conversion is not required. The signal is more immune to electrical noise and capable of transmission over longer distances than a raw turbine meter output.

FEATURES

- Scales turbine meter output to desired engineering units
- Switch-selectable or programmable versions available
- Converts frequency outputs into recognizable units for PLCs and other devices
- Amplifies turbine meter pulse output
- CSA approved

OPERATING PRINCIPLE

Fluid moving though a turbine flow meter causes the rotor to rotate in relation to the flow rate. The rotation of the rotor blades cuts through the magnetic field generated by the magnetic pick-up which in turn generates a frequency output signal that is directly proportional to the speed of the rotor.

The signal produced is received by the K-Factor Scaler input amplifier, which has an input sensitivity of 30 mV p-p to 30 V p-p. The signal is then sent to an onboard microcontroller, which acts as a divisor with a range of 1…999,999,999.

The divisor (K-factor) is user adjustable and set by programming it into the board. The microcontroller handles the dividing process by counting the input pulses and comparing it to the programmed K-factors. Once the count equals this value, an output pulse occurs for a selectable time period and the counting starts over.

MODELS

Badger Meter offers two versions of the K-Factor Scaler:

- Switch-selectable (Models B220-880)
- Programmable (Model B220-885)

The switch-selectable version has a set of eight rotary switches within the enclosure. The rightmost switch represents the least significant digit of the K-factor number. For example, if the desired K-factor is 4572, the switches will be set to 00004572.

Model B220-880

Model B220-885

The programmable version comes pre-calibrated from the factory when ordered with a Blancett Series 1100 turbine flow meter. In addition, it may be easily configured by the end-user through the use of a Windows®-based software utility kit (Model B220-900) that includes a PC serial port interface cable. See *Figure 1*.

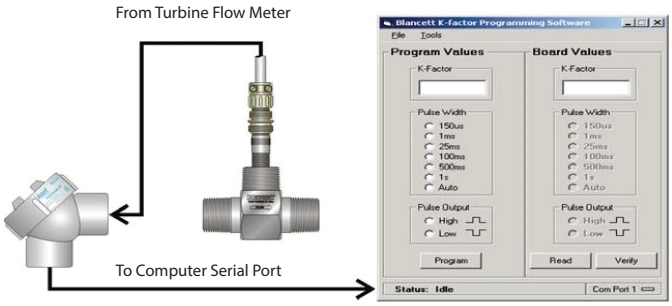

Figure 1: Programmable K-factor scaler and software

Models	B220-880	B220-885
K-Factor Storage	Yes	Yes
No. of Digits	8	9
Range	1…99,999,999	1…999,999,999
K-Factor Entry	Rotary switch	Electronic input

Badger Meter®

SGN-DS-00937-EN-05 (July 2025)

Product Data Sheet

SPECIFICATIONS

External Power	Input voltage	8.5…30V DC (diode protected)
	Maximum current draw	18 mA (using internal resistor @ 30V DC input)
Environmental	Operating temperature	–22…158° F (–30…70° C)
	Altitude	2000 m
	Use	Indoor/outdoor
	Humidity	0…90% non-condensing
Inputs (Magnetic Pickup)	Frequency range	0…4000 Hz
	Trigger sensitivity	30 mV p-p…30V p-p
Output Signal	Max voltage	30V DC
	Max power	0.25 W
Pulse Output (using internal pull-up resistor)	Maximum current	8 mA
	VH =	Power input voltage 0.7V DC
	VL =	Less than 0.4V @ maximum input power
	Internal pull-up resistor	3.6 kΩ (enabled/disabled by jumper)
Pulse Output (using external pull-up resistor)	Maximum current	100 mA
	VH =	Input voltage to external pull-up resistor
	VL =	[VH /(selected resistor value + 47 Ω)] × 47 Ω
	Pulse length	150 µs, 1 ms, 25 ms, 100 ms, 500 ms, 1 s, or auto mode
Enclosure Ratings	Model B220-885	Killark aluminum-capped elbow, Y3 CSA approved Class I, Div 1 & 2, Groups C, D; Class II, Div 1 & 2, Groups E, F, G; and Class III
	Models B220-880	Appleton GR conduit outlet boxes GRL100-A, GRLB100-A and GRT100-A, CSA approved Class I, Div 1, Groups B, C, D; Class II, Groups E, F, G; and Class III
Certifications	CSA Ordinary location	CAN/CSA-C22.2 No. 61010-1-12, UL Std. No. 61010-1 (3rd Edition)
	Pollution Degree 2, Overvoltage Category I	

DIMENSIONS

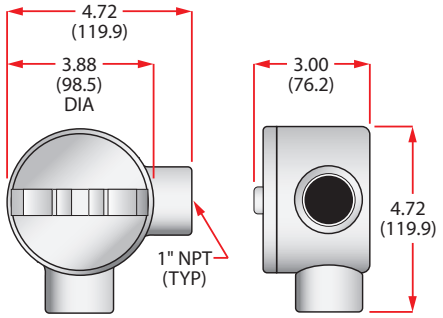

Model B220-880

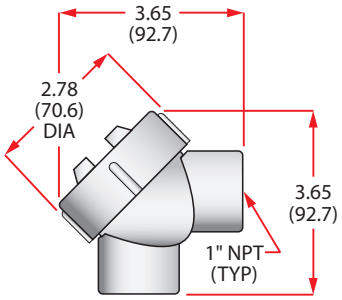

Model B220-885

Control. Manage. Optimize.

Blancett is a registered trademark of Badger Meter, Inc. Other trademarks appearing in this document are the property of their respective entities. Due to continuous research, product improvements and enhancements, Badger Meter reserves the right to change product or system specifications without notice, except to the extent an outstanding contractual obligation exists. © 2025 Badger Meter, Inc. All rights reserved.

www.badgermeter.com