RCV
Research Control® | ReCo® Valves

Electronic Valve Actuator

HH500

Badger Meter

RCV-UM-03410-EN-02 (October 2023)

User Manual

CONTENTS

Measurement 3
General 4
Design 4
Installation. 4
Mounting Actuator and Valve. 4
Electric Connection 4
Mechanical Adjustment of the Stroke 5
3-Point control (On-Off) 5
Position Electronic (4…20 mA, 0…10V) 6
Adjustment of the Electronic 7
Zero Adjustment 7
Adjustment of the Maximum Stroke 7
Feedback. 9
Heat Resistance 9
Maintenance 9

⚠ WARNING

THIS ELECTRICAL ACTUATOR CAN BE USED IN HIGH VOLTAGE AREAS. HAZARDOUS VOLTAGES ARE PRESENT IN THIS ELECTRICAL EQUIPMENT DURING OPERATION, IT CONTAINS NON-ISOLATED AND ROTATING PARTS. UNAUTHORIZED REMOVAL OF THE COVER CAN CAUSE SEVERE PERSONAL INJURY OR SUBSTANTIAL PROPERTY DAMAGE.

For the security of the service staff, make sure that

- Maintenance shall be performed only by qualified personnel,
- Personnel shall read carefully the given product documentation and should be familiar with all warnings in this manual,
- Service or maintenance shall be forbidden for unauthorized persons.

MEASUREMENT

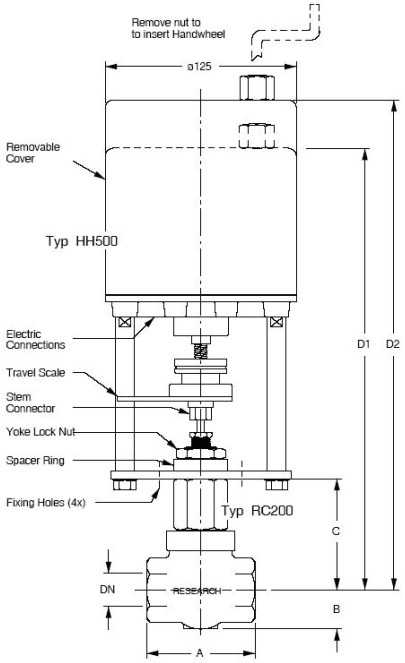

The shown version RC200 (807) with actuator HH500 is just one of the various possibilities. In general, all RCV Valves (type RC200 up to RC260) can be equipped with the type HH500 (drawing on request).

DN	A	B	C	D1	D2	Hub
1/4 in	54	17	48	255	275	11.1
1/2 in.	70	25	72	292	312	14.3
3/4 in.	86	30	99	309	339	14.3
1 in.	102	38	100	320	340	14.3

D1 = Actuator with 3-Point Control (ON/OFF)

D2 = Actuator with Position electronic (mA, Volt)

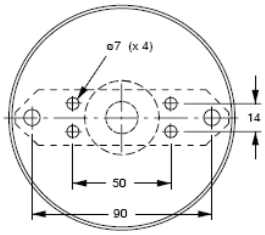

Figure 1

GENERAL

The type HH500 is a compact electric actuator with 4…20 mA, 0…10V signal input and/or 3-point control. Actuator can be subsequently set to different travel.

DESIGN

All electric parts are, separate from the gear, protected under a cover against dust and moisture (depends on protection class).

As standard option is included:

- Two torque switches (S1 and S2) which switch the motor off, if a corresponding magnitude acts in the opposite direction, e.g. as generated from the trimset when the plug rests in the seat or any dirt that will hold the trimset in its position. This prevents a severe damage or overload to the actuator.

Additional features that can be build in:

- Travel switches (S4, S5) to report a certain stem position (in between or end position) or to restrict the valve stroke on a specific level.
- One potentiometer for analog potential free position feedback of the actual stem position. If position electronic is used, no additional potentiometer is available.
- A heating resistant to avoid condensation water under the cover if high humidity or big temperature differences are present. The heating resistance will be regulated in a temperature range of 40…60° C.

INSTALLATION

The actuator should be protected against excessive thermal or direct sun radiation. If located outside it is necessary to built a protection roof over the actuator. The mounting position should be selected in such a way that the actuator is readily accessible with sufficient space to remove the cover. Any mounting position can be used except the mounting where the actuator is hanging downwards.

MOUNTING ACTUATOR AND VALVE

For subsequent mounting or dismounting the actuator, the following steps should be followed carefully.

- The stem actuator must be driven in, before the actuator can be mounted to the valve. **If this does not happen, the sealing surface of the plug and stem will be damaged.** If necessary, insert handwheel and turn it counterclockwise until the plug of the trim set moves out of the seat (ca. 6 mm).
- Set the actuator with yoke on the valve bonnet together with the spacer ring and yoke lock nut (see *Figure 1 on page 3*). Tighten the yoke lock nut (ca. 160 Nm)
- Stem connector has to be screwed and tightened on the valve stem.

ELECTRIC CONNECTION

The regulations for installing power equipment must be observed when laying electrical cables. Supply voltage and net frequency must be in accordance with the nameplate.

- Power supply: Nominal cross-section min. 1 mm^2
- Net protection (fuse), system side: max. 6 A
- Net separation, system side: Before removing the cover for service or maintenance, the supply voltage must be turned off.
- Insert cables through the screwed glands and connect to the terminals according to the wiring diagram adhered inside the cover (see *Figure 3 on page 5* and *Figure 6 on page 8*).
- Take care that the cables are not in contact with any moving or rotating part.
- Connect protective earth conductor to PE terminal.
- Tighten the glands so that the cables will have a strain relief.

MECHANICAL ADJUSTMENT OF THE STROKE

The mechanical adjustment is only necessary for actuators with position electronic. Exception: Actuator with 3-Point Control and additional potentiometer.

- Close the valve by using the handwheel. The torque switch S1 should "click" audible.
- Loosen lever pin 2 at the slotted lever 1 by opening the nut 3 and move it at the desired stroke mark. The slotted lever 1 should be parallel to the non-slotted lever behind (but just in close position).
  For DN 1/4 in. Mark "10"
  For DN 1/2…1 in. Mark "15"

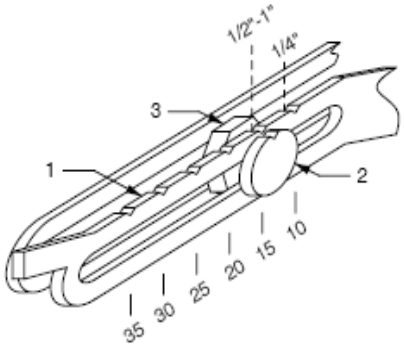

Figure 2

3-POINT CONTROL (ON-OFF)

Condition: Actuator closes against valve by torque switch (S1) and stops against actuator by torque switch (S2).

1. Connect protective earth conductor to the PE terminal.
2. Connect neutral feeder Mp/N to terminal 1.
3. Signal (phase) for "Valve Opens" to terminal 14.
4. Signal (phase) for "Valve Closes" to terminal 11.
5. Set bridges: from terminal 10 to 3 from terminal 13 to 2
6. Turn on supply voltage.
7. Connect signal voltage alternatively to terminal 11 and 14. The actuator should move in the corresponding direction.
8. Test the actuator. Check if the appropriate switch (S1, S2) will turn off the motor.

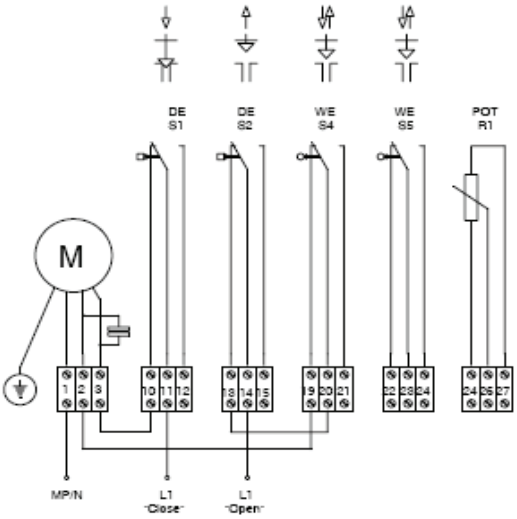

Figure 3

POSITION ELECTRONIC (4…20 MA, 0…10V)

The position electronic is responsible for controlling, regulating and positioning in actuators, he is working with a window comparator (TCA-965) as a 3-point controller. The controlled value (actual value) and the reference variable input (set value) will be compared together in the range of 0…10V or 4…20 mA and in case of deviation a correcting signal will be given to the actuator. The correcting signal stays as long as the set value and the actual value are not the same. A potentiometer (1 kΩ) is required for the actual value. This position feedback potentiometer is directly connected to the movement of the actuator.

The sensitivity (dead range) is designed with a voltage divider (165 mV or 0.33 mA). By changing the resistance R7 the sensitivity can be changed. A smaller resistance = smaller dead range, bigger resistance = bigger dead range.

The value of the hysteresis is 18 mV or 0.036 mA.

Spikes that might occur at the signal input (induced) will be more or less distinguished by an electronic entrance circuit.

The connection will be done trough the screwed cable glands. The signal input line should be separated from the supply voltage and should be a shielded cable (grounded on each side). If the cables are not shielded, the electronic can have fail functions.

1. Connect protective earth conductor to the PE terminal.
2. Connect neutral feeder Mp/N to terminal 1.
3. Connect continuous phase (Supply voltage) to terminal 54 on the circuit board.
4. Connect requested signal type:
   a. Signal voltage (0…10V DC) terminal 57 (Minus)
terminal 56 (Plus)
   b. Signal current (0/4…20V DC) terminal 57 (Minus)
terminal 59 (Plus)
5. Set signal voltage (current) to the actuator (check with the measuring device).
6. Turn on supply voltage.
7. Move actuator for testing. Actuator is pre-adjusted in the factory.
8. Check if the appropriate switch will shut off the motor. Valve closed, torque switch S1 should "click" audible. Valve open, torque switch S2 should be in action unless the actuator stops before because of the mechanical stroke pre-adjustment.

- Electronic is pre-adjusted according to the data in the order.
- Additional adjustment can be done with potentiometer "A" and "B" on the circuit board.
- Potentiometer "B" for the upper set value (max. stroke).
- Potentiometer "A" for lower set value (zero point).

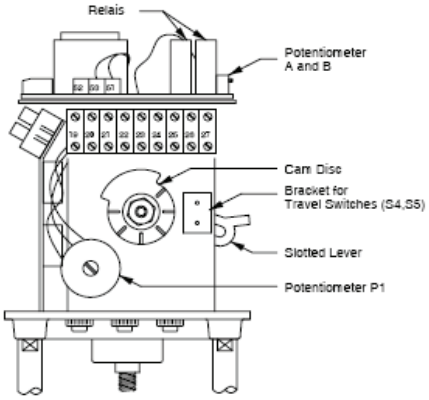

Figure 4

If the actuator is driven at the end position, the red LED must shine and the green LED must go out as long as the actuator is not shut off by the travel switch or the torque switch.

If the actuator shall be reversed, turn off supply voltage, unplug the reverse plug (*Figure 5 on page 8*) and turn it 180° and insert plug again. After the reversing the zero adjustment might be done again.

ADJUSTMENT OF THE ELECTRONIC

For example 4…20 mA, non-reversed.

Zero Adjustment

1. Drive actuator in close position (by putting 0 mA at the signal in port or by turning the handwheel clockwise). Actuator stops load-controlled (if the motor stops before, turn potentiometer P1 clockwise until the motor starts again).
2. Turn off supply voltage.
3. Turn potentiometer P1 (see *Figure 4 on page 6*) counterclockwise until it stops.
4. Disconnect motor terminal 51 and 53.
5. Turn on supply voltage.
6. Put 4 mA at the signal input.
7. Turn potentiometer "B" until the red LED shines and the green LED goes out.
8. Turn off supply voltage.
9. Connect motor terminal 51 and 53.
10. Turn on supply voltage.

Adjustment of the Maximum Stroke

1. Drive actuator to maximum stroke (with the appropriate mA-value or by handwheel)
   DN 1/4 in., 11.1 mm, DN 1/2…1 in., 14.3 mm.
2. Turn off supply voltage.
3. Disconnect motor terminals 51 and 53.
4. Turn on supply voltage.
5. Put 20 mA at the signal input.
6. Turn potentiometer "A" until the red LED shines and the green LED goes out.
7. Turn off supply voltage.
8. Connect motor terminals 51 and 53.
9. Turn on supply voltage.
10. Test the actuator, if necessary readjust potentiometer "A" and "B".

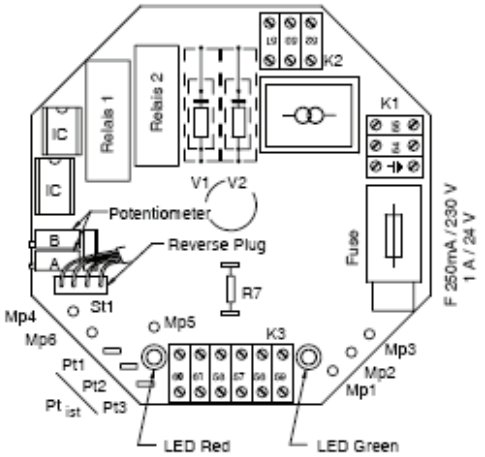

Figure 5

Mp1 (Measuring point 1) =	+15V
Mp2 (Measuring point 2) =	-5V
Mp3 (Measuring point 3) =	Ground
Mp4 (Measuring point 4) =	Upper set voltage 0…10V = 10.1V; 4…20 mA = 10.1V
Mp5 (Measuring point 5) =	Voltage from potentiometer
Mp6 (Measuring point 6) =	Lower set voltage 0…10V = 0V; 4…20 mA = 2V
R5 (Input resistance) VDC =	10k Ω
R6 (Input resistance) mA =	4990 Ω
R7 (Sensivity) = Dead range =	130 Ω (160 mV)

V1+V2 eventual spark suppression for relay contacts

Pt1-Pt3 (Position feedback) potentiometer = 1 kΩ

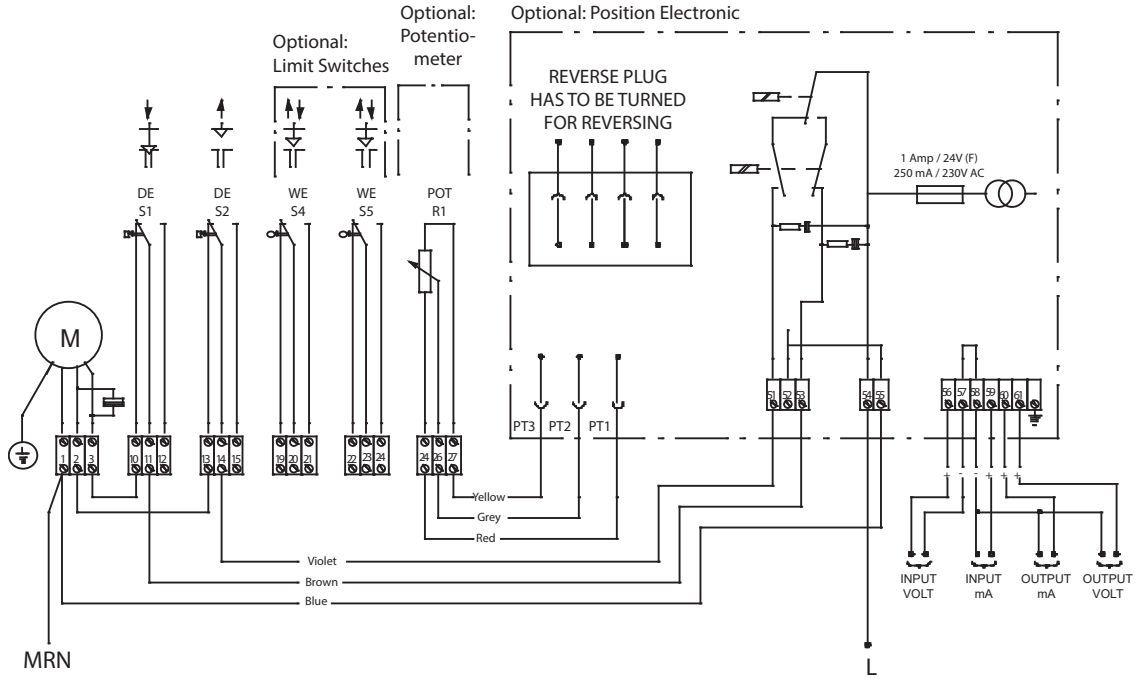

Figure 6

FEEDBACK

The set value (Position feedback) can be taken either in Volt or mA.

Position feedback (0…10V DC):	terminal 58 (Minus) terminal 61 (Plus)
Position feedback (0/4…20V DC):	terminal 58 (Minus) terminal 60 (Plus)

The position feedback is like-minded. The value of the output refers to the input value. The tolerance between input and output is maximum 0.4 mA or 200 mV.

⚠CAUTION

THE POSITION FEEDBACK IS NOT POTENTIAL FREE.

HEAT RESISTANCE

Heat resistance can be built in additionally to avoid condensation water under the cover. The heat resistance will be regulated in a temperature range of 40…60° C.

Supply voltage:	24, 110, 230V DC/AC
Power consumption:	15 W
Heating resistance:	terminal 7 terminal 8

MAINTENANCE

Re-grease the gear approximately every 3 years if the actuator is subject to normal use, or after approximately 200.000 double strokes in the case of increased use.

Lubricant that could be used, e.g. Grease Klüber Microlube type GL261.

INTENTIONAL BLANK PAGE

INTENTIONAL BLANK PAGE

Control. Manage. Optimize.

Research Control is a registered trademark of Badger Meter, Inc. Other trademarks appearing in this document are the property of their respective entities. Due to continuous research, product improvements and enhancements, Badger Meter reserves the right to change product or system specifications without notice, except to the extent an outstanding contractual obligation exists. © 2023 Badger Meter, Inc. All rights reserved.

www.badgermeter.com