Preso®
Differential Pressure Flow Meters

Ellipse® Pitot Tube Meter

AHS Annular Threaded Hot Tap Steam Meter

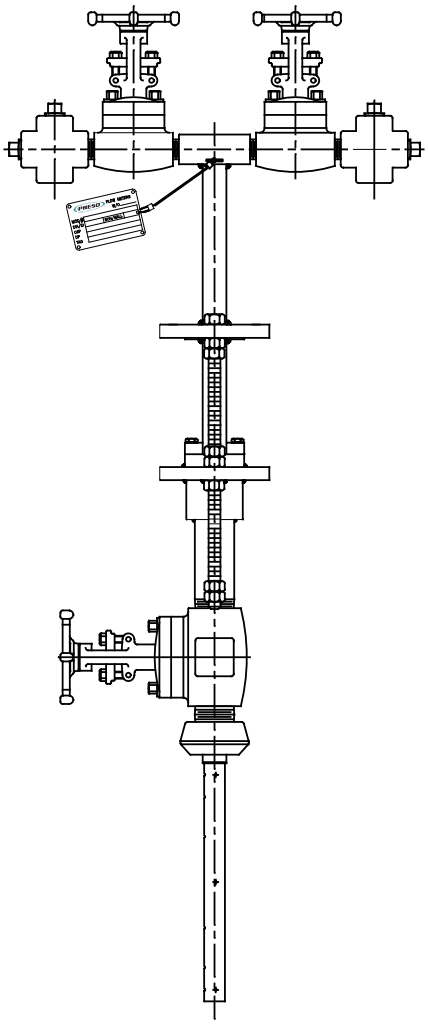

Badger Meter

PTT-UM-00513-EN-03 (August 2021)

User Manual

CONTENTS

Introduction. 3

Specifications 3

Pipe Orientation and Sensor Mounting 4

Installation Instructions, Single Support 5

Installation Instructions, Double Support 6

Typical Installation with Differential Pressure Transmitter 6

Location Instructions 7

Flow Curve 8

INTRODUCTION

The Preso patented elliptical design outperforms and provides greater accuracy than traditional differential pressure flow measurement devices. This differential pressure flow meter is designed with a series of ports facing the upstream velocity pressures, as well as flow sensing ports strategically located ahead of the trailing edge flow separation.

The multi-ported, self-averaging flow element consists of an elliptical shape with two independent flow sensing chambers. The impact velocity sensing holes (high pressure) are located along the leading edge and the true static sensing holes (low pressure) are on the exterior probe side. Model AHS comes with instrument shutoff valves with provisions to accept a transmitter or direct indicating meter.

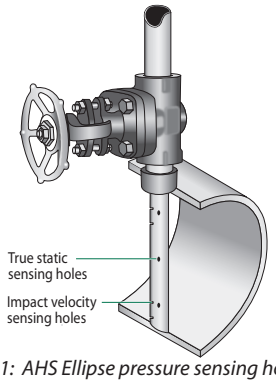

Figure 1: AHS Ellipse pressure sensing holes

SPECIFICATIONS

Applications	Saturated and super heated steam
Pipe Sizes	AHS; 2…14 inches (50…356 mm) AHS1; 14…24 inches (356…610 mm)
Pressure	800 psi (5515 kPa) maximum Consult factory for higher pressures
Temperature	800° F (426° C) maximum Consult factory for higher temperatures
Accuracy	±0.75% of reading
Turndown Ratio	17:1 with no vacuum effect
Standard Components	T-type head, 316 SS 1/2 in. FNPT connection CS 3000 lb weld fitting, ASTM A105 316/316L SS Ellipse sensor Instrument valves (2 per sensor), 1/2 in., CS 316 SS ID tag with wire CS packing chamber with EPDM packing gland CS isolation gate valve, NPT threaded CS threaded nuts and bolts CS nipples, schedule 40
Reynolds Number	Greater than 75,000 maintains most accurate flow measurements Less than 75,000 consult factory for estimated results
Resonance	Less than 0.8 but greater than 1.2. If greater than 0.8, use double support. System shutdown is required when the double support option is used. Select larger diameter Ellipse to avoid double support.

Table 1: Specifications

PIPE ORIENTATION AND SENSOR MOUNTING

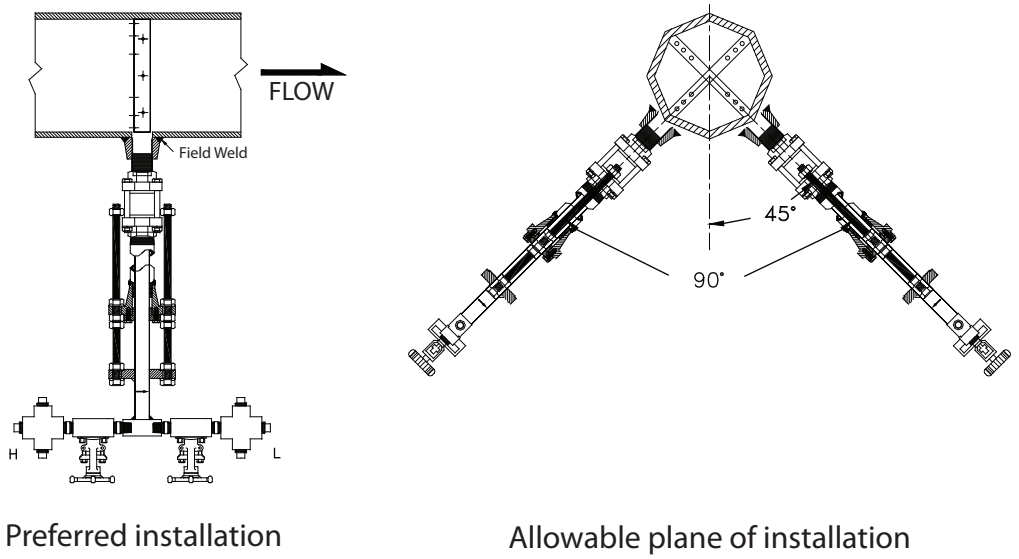

Figure 2: Horizontal pipe installation

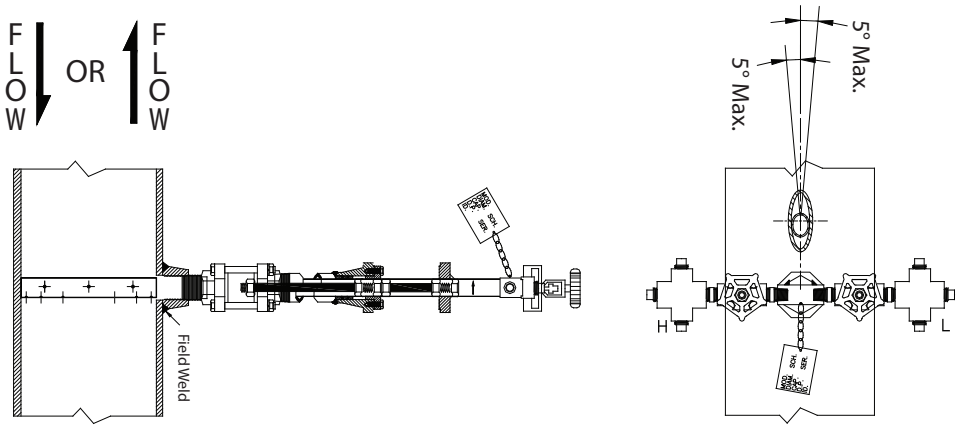

NOTE: Preferred flow direction for steam is upward.
Illustration represents installation for upward flow.

Figure 3: Vertical pipe installation

NOTE: For general steam applications, instrument valves should be mounted at the same elevation to maintain equal condensation levels.

INSTALLATION INSTRUCTIONS, SINGLE SUPPORT

1. Choose the proper location to install the AHS Ellipse using AGA/ASME standards (or equivalent). See *"Location Instructions" on page 7*.
2. Grind the surface of the pipe where the AHS Ellipse is to be inserted to provide a clean area for welding.
3. Weld the supplied weld-o-let to the pipe using standard codes for your application (1/16 in. weld gap recommended). Take care to protect the threads during the welding process.
4. Thread the close nipple into the weld connector. Install the supplied three-piece isolating ball valve.
5. Mount the high pressure drilling machine onto the ball valve. Open the ball valve. Drill a hole through the pipe wall according to *Table 2 on page 5*.

NOTE: There is no need for a drilling machine if it is not a hot tap installation or if the system is not pressurized.

Model / Sensor	Weld Connector	Drill Bit
AHS (7/8 in.)	1-1/4 in.	1-1/8 in.
AHS1 (1-1/4 in.)	1-1/2 in.	1-3/8 in.

Table 2: Single support drill bit size

6. Withdraw the drill bit through the isolating valve, close the valve and dismantle the drilling machine. Make sure there is no leakage at the valve and close nipple connections. The valve is to remain completely closed until step 9.
7. Install the cage nipple, cage nipple assembly and packing gland with the threaded rods assembly by threading it into the isolating valve. Align the arrow on the sensor head with the direction of flow. See Figure 4.

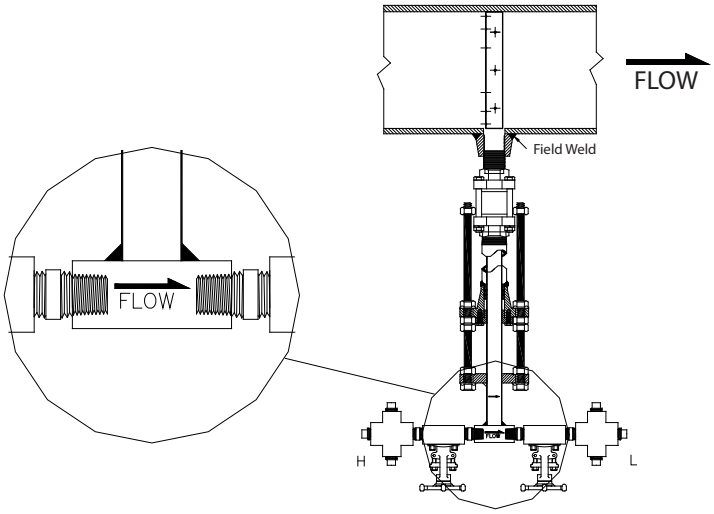

Figure 4: Sensor alignment

8. Install the instrument valves at the AHS Ellipse head connections. Make sure the valves are fully closed to prevent them from leaking upon startup. Install the cross tees.
9. Open the isolating ball valve. Insert the AHS Ellipse sensor into the pipe until it reaches the opposite pipe wall. This should be done by turning the threaded insertion rods clockwise using a wrench.
10. Connect the instrument lines to the sensor head valves. In turn, connect these lines to a gage or transmitter.
11. Verify that the instrument valves are FULLY CLOSED. Remove the1/2 in. plugs from the top and side ports of the two (2) forged cross tees.
12. Slowly pour water into the top ports of each forged cross tee until the system is full. Water will flow out of the side ports of both crosses.
13. Reinstall the 1/2 in. plugs into the top and side ports. Ensure that they are secure. Then fully open the two (2) gate valves.
14. Allow condensation levels to stabilize 1/2 hour before taking instrument reading.

INSTALLATION INSTRUCTIONS, DOUBLE SUPPORT

1. Follow steps 1 through 7 in *"Installation Instructions, Single Support" on page 5*. At 180° from and on the same plane as the previously drilled hole, grind the surface of the pipe to provide a clean area for welding. Drill a hole and deburr, especially on the inside of the pipe. The hole used for the double support should be sized according to *Table 3 on page 6*.
2. Weld the double support weld-o-let making sure that it is centered with the drilled hole (1/16 in. weld gap recommended).

Model / Sensor	Weld Connector	Drill Bit
AHS (7/8 in.)	1-1/4 in.	1-1/8 in.
AHS1 (1-1/4 in.)	1-1/2 in.	1-3/8 in.

Table 3: Double support drill bit size

3. Install the AHS Ellipse sensor through the two holes. Make sure that the double support pin passes through the guide ring. See Figure 5.

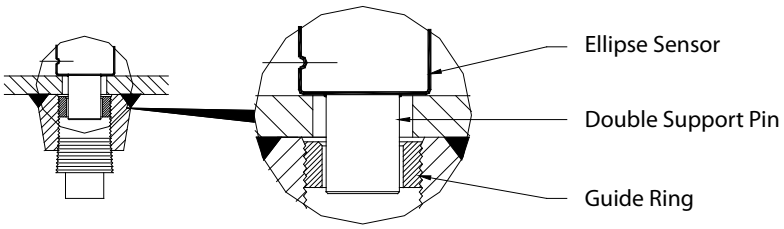

Figure 5: Double Support Pin

4. While holding the AHS Ellipse in its fully inserted position, align the sensor head with the direction of flow as in step 7, *"Installation Instructions, Single Support" on page 5*.
5. Ensure that the AHS Ellipse is in the correct orientation and spans the inside of the pipe. Tighten the compression nut. After tightening the compression nut manually, tighten it 1-1/4 turns more using a wrench.
6. Install the plug into the end of the double support weld-o-let. Tighten the plug to prevent leakage. Ensure that there is no leakage in the system.
7. Follow steps 11 through 14 in *"Installation Instructions, Single Support" on page 5*.

TYPICAL INSTALLATION WITH DIFFERENTIAL PRESSURE TRANSMITTER

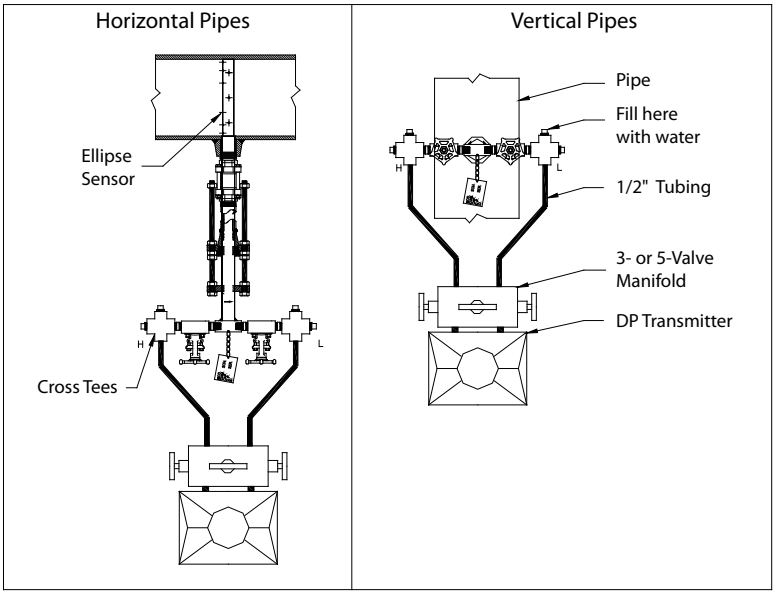

Figure 6: Installation with differential pressure transmitter

LOCATION INSTRUCTIONS

Straight pipe requirements: Accuracy is affected by the piping configurations due to the disturbances of the flow profile. A fully developed symmetrical flow profile is achieved with the minimum upstream and downstream recommended lengths.

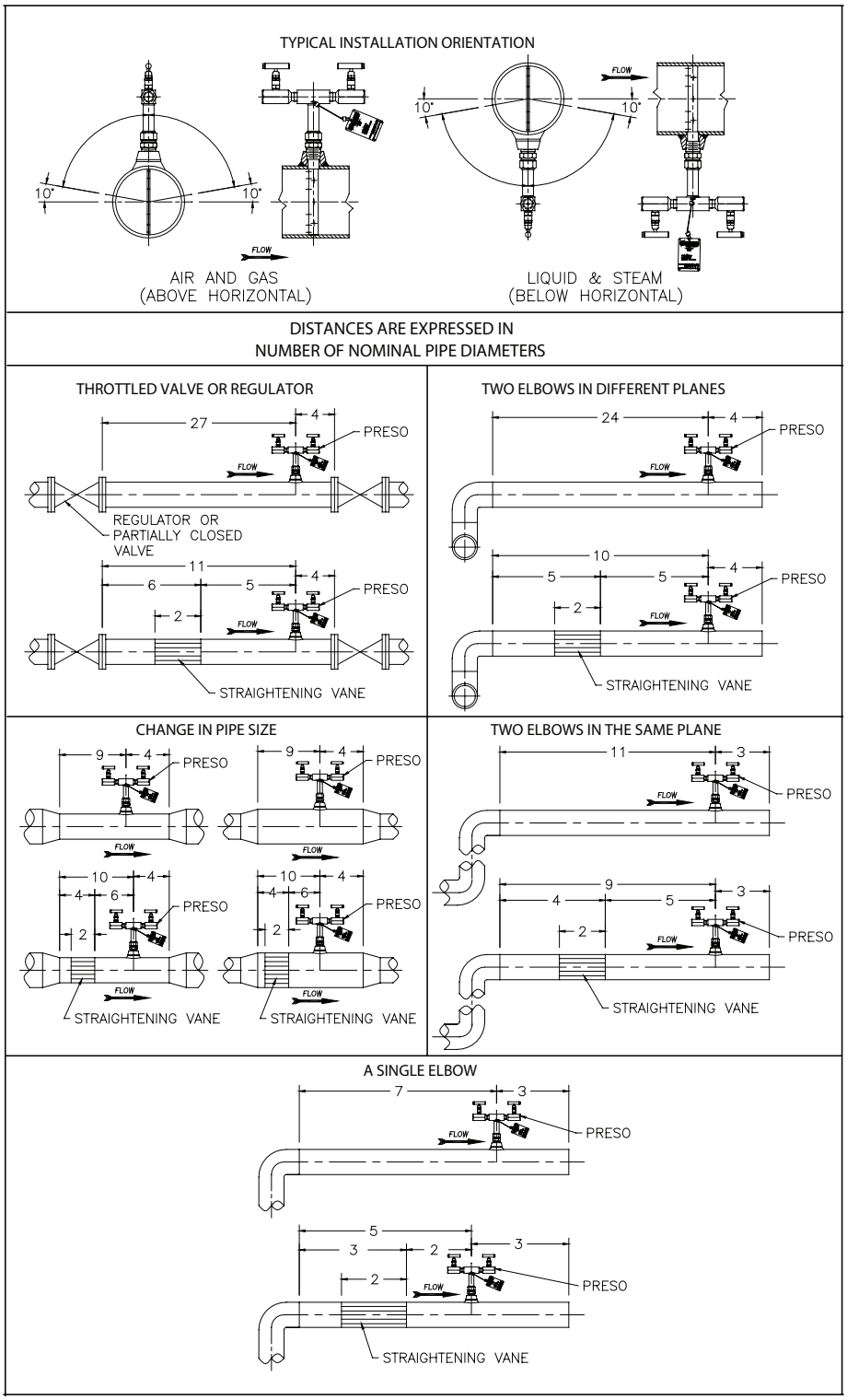

Figure 7: Location instructions

FLOW CURVE

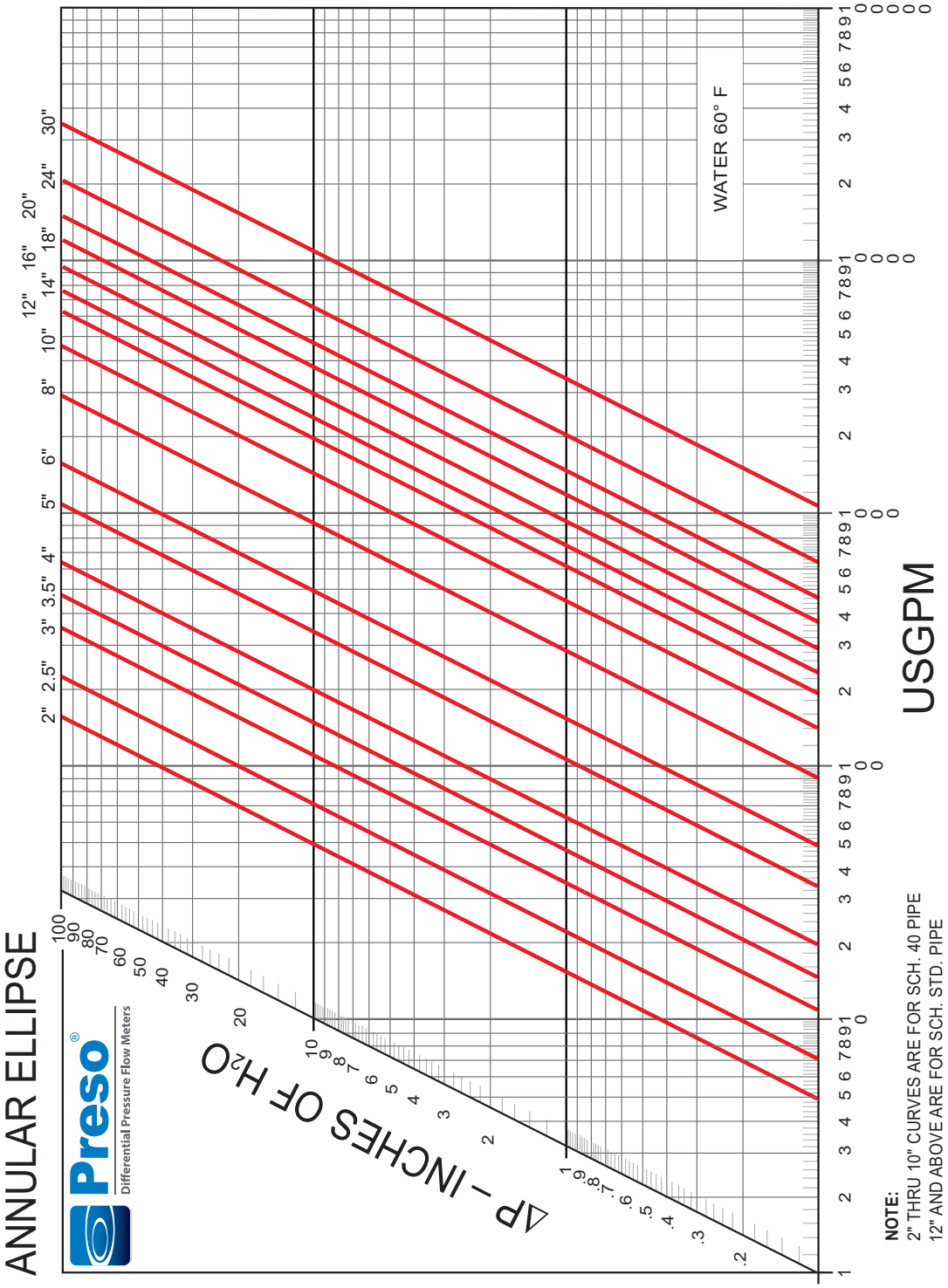

Figure 8: Flow curve

Control. Manage. Optimize.

Preso is a registered trademark of Badger Meter, Inc. Other trademarks appearing in this document are the property of their respective entities. Due to continuous research, product improvements and enhancements, Badger Meter reserves the right to change product or system specifications without notice, except to the extent an outstanding contractual obligation exists. © 2021 Badger Meter, Inc. All rights reserved.

www.badgermeter.com