E-Series® Ultrasonic Plus Meter

with Integrated Valve

5/8 × 3/4 in., 3/4 × 7-1/2 in., 3/4 × 9 in.

DESCRIPTION

The E-Series® Ultrasonic Plus meter uses solid-state ultrasonic transit time technology to measure cold potable water and incorporates an integrated valve into the lay length of the meter. The integrated valve allows remote flow restriction of water service in residential utility applications.

Authorized utility personnel can actuate the valve via a command sent from BEACON® SaaS (Software as a Service) to an ORION® Cellular endpoint connected to the meter.

BEACON displays the status of the valve (open, partial or restricted) and upon a command to transition the valve, confirms the success of that actuation. Status of the valve is also indicated on the physical meter via a position-indicating LED.

E-Series Ultrasonic Plus meters comply with the lead-free provisions of the Safe Drinking Water Act, are certified to NSF/ANSI/CAN Standards 61 and 372, and carry the NSF 61 marking. All components of the meter comprise the certified system. E-Series Ultrasonic Plus meters comply with the applicable portions of the most recent revision of AWWA Standard C715.

All electronic components utilized in the meter and RF Transceiver design comply with applicable FCC Part 15 standards and AWWA C707 for encoded remote reading systems.

Features

- Delivers precision accuracies with extended flow ranges
- Gate valve integrated into standard lay length of meter—no cut-ins required
- Patented magnetically coupled valve to extend field life (US Patent No. 10,161,777.B2)
- Patented flow restriction valve technology supports open, restricted and partially restricted options (US Patent No. 8,539,827)
- Does not require infrastructure
- Valve position-indicating LED
- Fully submersible—electronics completely encapsulated to withstand harsh, flooded pit environments
- Low pressure loss
- Easy-to-read, 9-digit display presents consumption, rate of flow, reverse flow indication and alarms
- High resolution industry standard ASCII encoder protocol

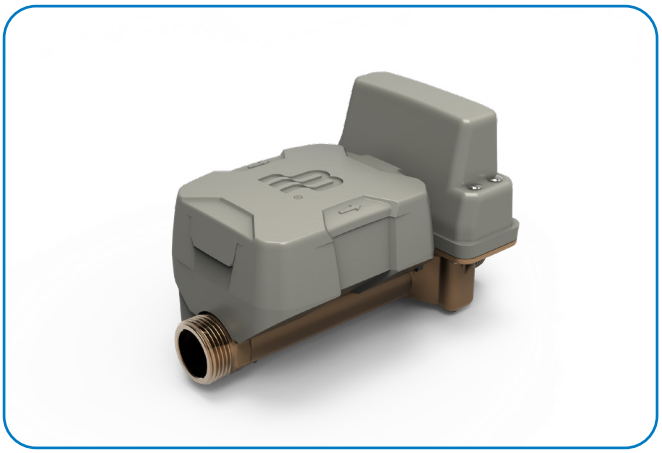

APPLICATIONS

The E-Series Ultrasonic Plus meter provides a cost-effective, non-confrontational, safe method for water utilities to temporarily restrict an end consumer's water service. The most common application is for authorized utility personnel to inhibit water service of repeat delinquent accounts to encourage prompt payment from the property owner. Other applications may include actuating the valve as tenants change, or accommodating end-customer requests for temporary water restriction.

CONSTRUCTION

The E-Series Ultrasonic Plus meter features lead-free bronze alloy meter housing, ultrasonic transducers, a meter-control circuit board with associated wiring, LCD, and battery. Electronic components are housed and fully potted within a molded, engineered polymer enclosure, which is attached to the meter housing. The transducers extend through the housing and are sealed by O-rings, enabling turbulence-free water flow through the tube. The open flow tube design prevents obstruction of flow to reduce pressure loss and provide long-term accuracy.

OPERATION AND PERFORMANCE

As water flows into the measuring tube, ultrasonic signals are sent consecutively, in forward and reverse directions of flow. Velocity is then determined by measuring the time difference between the measurement in the forward and reverse directions. Total volume is calculated from the measured flow velocity using water temperature and pipe diameter. The LCD shows total volume, rate of flow and alarm conditions.

Badger Meter

ESM-DS-02022-EN-08 (June 2025)

Product Data Sheet

A battery-powered DC motor module drives the dry-side magnetic coupling that is completely separated from the pressure vessel. The dry-side magnet couples to a mating wet-side magnetic assembly consisting of a magnetic disc, power screw and gate. The combined dry-side and wet-side magnetic coupling transfers torque from the motor to turn the power screw inside the pressure vessel, which ultimately drives the gate into the open, restricted* or partially restricted positions based on a command prompted by the connected ORION Cellular endpoint via BEACON. If necessary, actuation of the valve can be also be performed at the meter site.

System screens within BEACON indicate the position of the valve and record the date and time for all valve actuations. In addition, the position of the valve can also be determined by physical inspection of the meter via the valve position LED.

** When the valve is in restricted position, typical water flow is restricted to 0.125 gpm (0.03 m³/hr) or less for humanitarian, life-sustaining measures.*

INSTALLATION

The E-Series Ultrasonic Plus meter is completely submersible and can be installed using horizontal or vertical piping, with flow in the up direction.

The meter will not measure flow when an empty pipe (flow sensors are not fully submerged) condition is experienced.

SPECIFICATIONS

E-Series Ultrasonic Plus Meter Size	**5/8 in. x 3/4 in. (15 mm)**	**3/4 in. (20 mm)**
Normal Test Flow Limits	0.1…25 gpm (0.023… 5.68 m³/h)	0.1…32 gpm (0.023… 7.27 m³/h)
Minimum Test Flow Limits	0.05 gpm (0.014 m³/h)	0.05 gpm (0.014 m³/h)
Safe Maximum Operating Condition (SMOC)	25 gpm (5.68 m³/hr)	32 gpm (7.27 m³/hr)
Typical Pressure Loss	4.0 psi at 15 gpm (0.28 bar at 3.41 m³/h)	2.8 psi at 15 gpm (0.19 bar at 3.41 m³/hr)
Reverse Flow - Maximum Rate	4.0 gpm (0.91 m³/hr)	4.0 gpm (0.91 m³/hr)
Operating Performance	In the normal temperature range of 45…122° F (7…50° C), new meter consumption measurement is accurate to: • ±1.5% over the normal flow range • ±3.0% from the extended low flow range to the minimum flow value	
Typical Flow Rate in Restricted Position*	0.125 gpm (0.03 m³/hr) or less for humanitarian, life-sustaining measures	
Typical Flow Rate in Partially Restricted Position*	1.0 gpm ± 0.5 gpm (0.227 m³/hr ± 0.114 m³/hr)	
Storage Temperature	– 40…140° F (– 40…60° C)	
Maximum Ambient Storage (Storage for One Hour)	150° F (66° C)	
Measured-Fluid Temperature Range	34…140° F (1…60° C)	
Humidity	0…100% condensing; meter is capable of operating in fully submerged environments	
Maximum Operating Pressure of Meter Housing	175 psi (12 bar)	
Register Type	Straight reading, permanently sealed electronic LCD; digits are 0.28 in. (7 mm) high	
Register Display	• Consumption (up to nine digits) • Rate of flow • Alarms • Unit of measure factory programmed for gallons, cubic feet and cubic meters	
Register Capacity	• 10,000,000 gallons • 1,000,000 cubic feet • 100,000 cubic meters	
Totalization Display Resolution	• Gallons: 0.XX • Cubic feet: 0.XXX • Cubic meters: 0.XXXX	
Meter Battery	3.6-volt lithium thionyl chloride battery is fully encapsulated within the register housing and is not replaceable; 20-year battery life	
Valve Battery	3.6-volt lithium thionyl chloride battery within the power module; 20-year battery life, based upon 480 actuations	

** "Typical Flow Rate" based on 60 psi (4 bar) at the meter*

MATERIALS

Meter Housing	Lead-free bronze alloy
Valve Bonnet	Lead-free bronze alloy
Bonnet Seal	EPDM O-ring
Register Housing	Engineered polymer
Power Control Module Housing	Engineered polymer
Gate	Engineered polymer
Power Screw	316 stainless steel

PHYSICAL DIMENSIONS

E-Series Ultrasonic Plus Meter Size	**5/8 in. × 3/4 in. (15 mm)**	**3/4 in. (20 mm)**	
Size Designation X Lay Length	5/8 in. × 3/4 in. × 7-1/2 in. (15.9 mm × 19 mm × 190.5 mm)	3/4 in. × 7-1/2 in. (19 mm × 190.5 mm)	3/4 in. × 9 in. (19 mm × 228.6 mm)
Weight (without endpoint)	4.2 lb (1.91 kg)	4.2 lb (1.91 kg)	4.4 lb (1.99 kg)
See illustration below for Measurement Designations			
Length (A)	7.5 in. (190.5 mm)	7.5 in. (190.5 mm)	9.0 in. (228.6 mm)
Height (B)	3.69 in. (93.73 mm)	3.69 in. (93.73 mm)	3.69 in. (93.73 mm)
Height (C)	4.57 in. (116.08 mm)	4.57 in. (116.08 mm)	4.57 in. (116.08 mm)
Width (D)	4.728 in. (120.09 mm)	4.728 in. (120.09 mm)	4.728 in. (120.09 mm)
Bore Size	3/4 in. (19 mm)	3/4 in. (19 mm)	3/4 in. (19 mm)
Coupling Nut & Spud Thread	1 in. × 11-1/2 NPSM	1 in. × 11-1/2 NPSM	1 in. × 11-1/2 NPSM
Tailpiece Pipe Thread (NPT)	3/4 in. (19 mm)	3/4 in. (19 mm)	3/4 in. (19 mm)
Service Pipe Thread (NPT)	3/4 in. (19 mm)	3/4 in. (19 mm)	3/4 in. (19 mm)

Measurement Designations

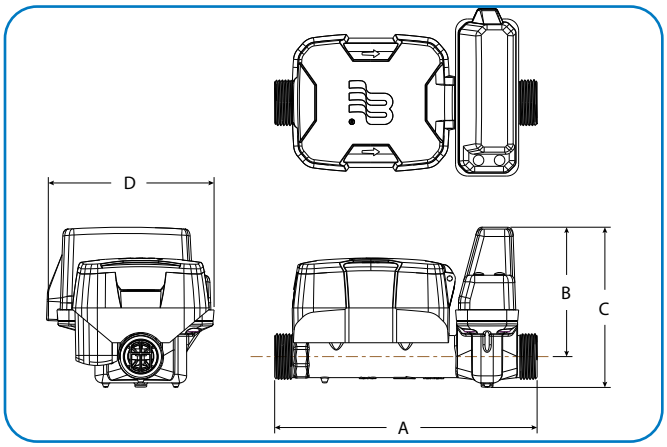

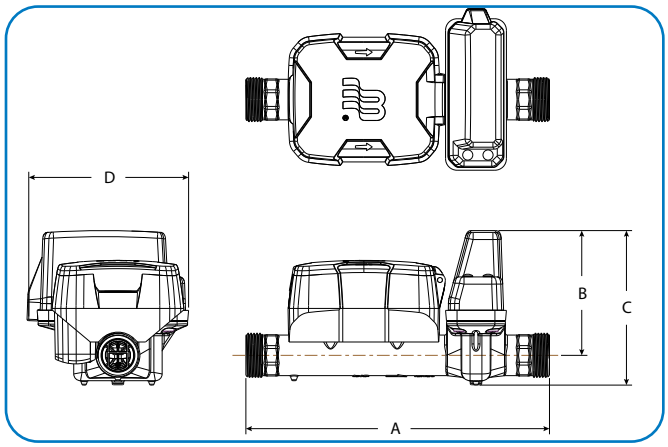

PRESSURE LOSS CHART

Typical Rate of Flow in Gallons per Minute (gpm)

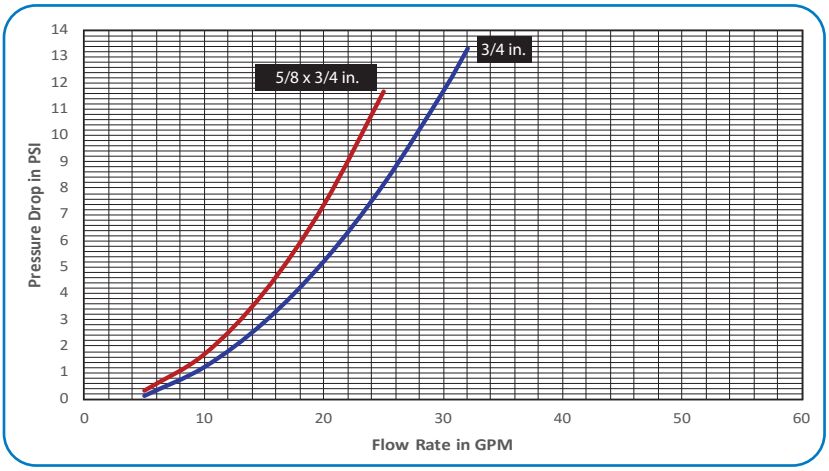

ACCURACY CHARTS

Typical Curve—Rate of Flow in Gallons per Minute (gpm)

5/8 x 3/4 in. Meter

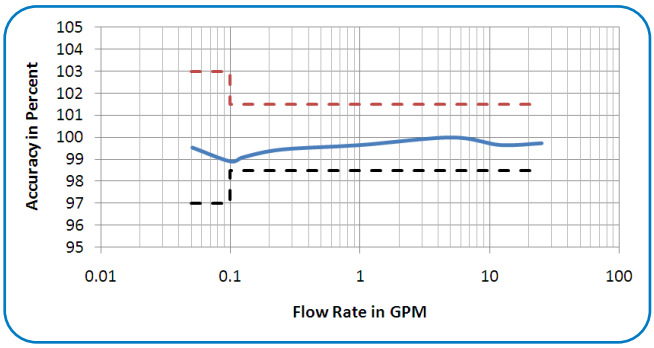

3/4 in. Meter

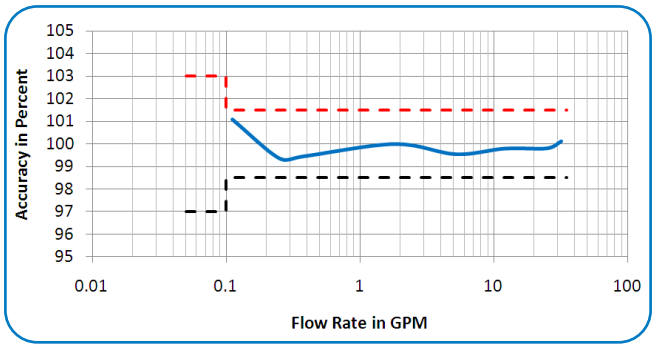

BEACON, E-Series and ORION are registered trademarks of Badger Meter, Inc. Other trademarks appearing in this document are the property of their respective entities. Due to continuous research, product improvements and enhancements, Badger Meter reserves the right to change product or system specifications without notice, except to the extent an outstanding contractual obligation exists. © 2025 Badger Meter, Inc. All rights reserved.