RCV
Research Control® | ReCo® Valves

Control Valves

Type HP-10, 10,000 PSI

Badger Meter

RCV-UM-01034-EN-02 (February 2021)

User Manual

CONTENTS

Overview 5
Component Descriptions 5
Body/Bonnet Assembly 5
Inner Valve 5
Actuator 5
Packing 5
Unpacking 5
Installation 6
Reorienting the Air Connections 6
Operation 7
Adjusting the Closed Position 7
Packing Adjustment for Hydro Testing 10,000 PSI Valves with Torlon/PFA Packing 7
Hydro Test Procedure/Packing Adjustment 8
Packing Replacement and/or Inner Valve Replacement 9
HP-10 Angle* High Pressure Valve Assembly (10,000 PSI) 1/4" NPT 10
HP-10 Globe High Pressure Valve Assembly (10,000 PSI) 1/4" NPT 11

OVERVIEW

This manual provides installation, operation and maintenance information relating to the HP-10 valve assemblies.

To insure operator safety and optimum performance, these instructions should be read, understood and followed. All technical bulletins, drawings and literature pertaining to this design should be used with this manual.

Throughout this document, numbers in parentheses—for example (3)—refer to items on the HP-10 drawing on *page 10*.

COMPONENT DESCRIPTIONS

Body/Bonnet Assembly

- The HP-10 is available in both Angle or Globe pattern
- This high pressure design comes with a union bonnet.
- Standard and extended cooling fin bonnets are available.
- The standard alloy is dual certified 316/316L SS but other alloys are available.

Inner Valve

- The needle (plug) and seat inside the body/bonnet assembly is the component which modulates the flow through the valve as the actuator strokes.

  NOTE: The needle and seat are matched sets and should not be interchanged with other similar components, regardless of labeling.

- The inner valve is dual certified 316/316L SS but other alloys are available. If these components are gold in color, they have been coated with titanium nitride.

Actuator

- The actuator sits atop the body/bonnet assembly and is connected to the body using a yoke locknut. The actuator may be either Air-To-Open (ATO) Spring-To-Close or Air-To-Close (ATC) Spring-To-Open.
- An ATO actuator closes the valve upon a decreasing instrument signal or loss of signal. The ATC actuator opens the valve upon a decreasing instrument signal, loss of signal or loss of air supply.

Packing

- The packing, a series of plastic rings, seals the stem of the valve, preventing leakage of the process media outside the valve. The materials and orientation of the rings can vary from valve to valve.
- Refer to your customer drawing for orientation and material type.

⚠ WARNING

VALVES OF THIS TYPE ARE TYPICALLY SUPPLIED WITH SOME FORM OF HIGH-PRESSURE PROCESS CONNECTION. BE SURE TO USE PROPER MATING FITTINGS TO CONNECT THE VALVE TO PROCESS LINES. USING MISMATCHED FITTINGS MAY RESULT IN DAMAGE TO THE BODY, LEAKAGE OR INJURY TO PERSONNEL.

UNPACKING

Inspect the valve assembly for damage while removing it from the package. Notify the shipping service of any damage and retain damaged boxes for inspection.

INSTALLATION

For maintenance and servicing ease, select a location for the valve assembly installation that allows for safe access to both sides of the valve.

1. Remove any protective plugs or devices from the valve assembly (body, stem, positioner lever and so on).
2. Do not remove the black hex pipe plug vent from the actuator housing, so to prevent debris from entering the spring side of the housing during operation.
3. Make sure all lines are free of debris by flushing with fluid or blowing with clean air or other suitable gas, before connecting any lines.
4. Install suitable isolation valves upstream and downstream of the control valve.
5. Due the small size and close clearances of the inner valve, proper filtration of the process is recommended. If unsure about filter size, contact the factory with the valve's serial number and inner valve size.
6. Install the valve in the pipeline using mating fittings. Never mix fitting types or brands without prior knowledge or experience.
7. If the unit is not equipped with a positioner, connect the instrument signal line to the port located on the actuator housing:
   - Lower port if Air-To-Open
   - Upper port if Air-To-Close
8. Use a paste type sealant or clear grease for air connections. DO NOT use TFE tape, as small pieces of the tape may block the small orifices in the devices..
9. If the unit is equipped with a positioner or other devices, make those connections according to the instructions for the device.

⚠CAUTION

- ***DO NOT EXCEED AIR PRESSURE LIMITS.***
  - ***90 PSIG FOR THE ACTUATOR (40…60 PSIG SHOULD BE SUFFICIENT FOR MOST APPLICATIONS).***
  - ***SEE SPECIFIC ACCESSORY MANUAL FOR OTHER DEVICES.***
- ***IF THE UNIT IS EQUIPPED WITH A POSITIONER (I/P TRANSDUCER, REGULATOR), IT HAS BEEN PRE-ADJUSTED AT THE FACTORY. DO NOT ATTEMPT TO READJUST WITHOUT FIRST TESTING THE UNIT WITH THE PRESET SETTINGS.***

REORIENTING THE AIR CONNECTIONS

Throughout these instructions, numbers in parentheses—for example (3)—refer to items on the HP-10 drawing on *page 10*.

Use the following procedure if the air connections must be reoriented and if the unit is an Air-To-Close (ATC) version:

1. Loosen the yoke lock nut (9) until the actuator can turn. Orient the unit as desired and retighten the yoke locknut.
2. If the unit is an Air-To-Open (ATO) version and must be reoriented. DO NOT simply rotate the actuator or damage to the inner valve (3) may occur.
3. Connect the control air and/or electrical signal lines to the I/P or positioner, so the valve can be stroked.
4. Signal the valve to raise the inner valve off the seat 10…30%.
5. Once the inner valve is off the seat, loosen the yoke locknut and orient the actuator as desired.
6. Retighten the yoke locknut.
7. De-stroke the valve, lowering the inner valve to the seated position.
8. If the unit is equipped with a positioner or other accessories, refer to its instruction for operation and adjustment.
9. When stroking the valve, DO NOT remove the airline or electrical signal, as the unit may close rapidly, possibly damaging the inner valve.

NOTES:

- Although the valve will operate in any orientation, a vertical stem position is preferred for ease of maintenance and adjustment.
- Proper bracing and support is recommended, due to the weight of the unit.
- Brackets may be factory ordered or fabricated and attached to one or more of the actuator rim screws.

OPERATION

Before subjecting the valve to process conditions:

- Verify the stroke function of the unit, to make sure the valve is stroking properly in response to the instrument signal.
- Make sure all accessories are functioning properly.

If the unit is ATO, upon an increasing input signal, the valve will stroke and increase the flow through the pipeline. If the unit is ATC, the valve will stroke and decrease the flow through the pipeline.

Adjusting the Closed Position

When in the closed position, the inner valve should achieve some level of shut-off, depending on inner valve size and required tightness. Typically, linear inner valves sizes K-O should achieve ANSI Class IV and P sizes should achieve Class III.

Seat tightness is pre-adjusted at the factory. Due to wear or repeated changing of the inner valve, seat tightness may need to be adjusted.

Throughout these instructions, numbers in parentheses—for example (3)—refer to items on the HP-10 drawing on *page 10*.

To adjust the seating position or to achieve maximum tightness, use the following method:

NOTE: Application of excess closing force can bend or damage the inner valve/stem, due to high potential actuator force.

1. Stroke the valve to approximately 10% off the seat by signaling the actuator.
2. Turn the spring adjuster (25) clockwise to increase spring preload, or counter-clockwise to decrease spring preload.
3. Using the input signal, close the valve by decreasing (ATO) or increasing (ATC) the signal.
4. The valve should be adjusted to seat the inner valve at:
   - Pneumatic Signal: 3.2 psig, if ATO and 14.9 psig if ATC.
   - Electric Signal: 4.1 mA if ATO and 19.9 mA if ATC.
5. Reduce the signal to the minimum and conduct seat leak testing.

   If leakage through the valve is excessive:
   - Make sure the positioner is adjusted properly, causing the valve to be seated at the proper actuator signal.
   - Replace the inner valve.

Packing Adjustment for Hydro Testing 10,000 PSI Valves with Torlon/PFA Packing

Customer pressures for 10 KSI valves should not exceed 10,000 psig, or the lesser of the lowest rated component within the applicable line. Factory hydro pressure should not exceed 15,000 psig.

HYDRO TEST PROCEDURE/PACKING ADJUSTMENT

Throughout these instructions, numbers in parentheses—for example (3)—refer to items on the HP-10 drawing on *page 10*.

1. Loosely plug the outlet of test valve and connect the inlet to the hydro pump.
2. Stroke valve to 20…50% open.
3. Open upstream valve, under low pressure (60…100 psig) to vent air until water leaks past the downstream plug.
4. Loosen the downstream plug until air is vented, then tighten.
5. Tighten packing gland (8) until water leakage stops.
6. Tighten the packing gland another 1/16…1/8 rotation.
7. Slowly engage high pressure pump, stopping at 10,000 psig or whenever leakage occurs.
8. When leakage occurs or 10,000 psi is reached, reduce pressure to zero.

⚠CAUTION

NEVER TIGHTEN THE PACKING GLAND WHILE THE VALVE IS UNDER PRESSURES HIGHER THAN 500 PSIG, AS DAMAGE (GALL OR SEIZE) MAY OCCUR TO THE THREADS OF THE PACKING GLAND OR BODY. DO NOT TEST OVER 10 KSI.

IMPORTANT

- Sealing extremely high pressures is difficult at best.
- Although Teflon PFA is more resistant to cold flow (creep) than pure TFE, it is a plastic and possesses some cold flow.
- In addition to the forces applied to the packing by the gland, the system pressure also plays a part in sealing the packing against the stem and the packing cavity wall.
- Some packing relaxation is not uncommon. Therefore, the packing should be tested when the valve is installed.
- The pressure should be raised carefully and in stages to check for leaks.
- If leaks occur, the pressure should be lowered to zero, the gland turned clockwise 1/16 inch turn, then retested.
- Do not attempt to tighten the gland while the valve is under high pressure.
- When packing has been used for any length of time at high pressures and then reduced to lower pressures, the packing may leak when the pressure is then re-raised to higher pressures. If leakage occurs, some retightening may be necessary.
- If the valve is disassembled, always install new packing.
- Never reuse packing that has been removed from a used valve.

PACKING REPLACEMENT AND/OR INNER VALVE REPLACEMENT

Throughout these instructions, numbers in parentheses—for example (3)—refer to items on the HP-10 drawing on *page 10*.

1. Remove the valve to a suitable workspace.
2. If the unit has an Air-To-Open actuator, signal the valve to raise the inner valve off the seat. Unthread the inner valve stem from the connector (10). Lay the actuator to the side, with the air pressure still on the diaphragm.
3. Loosen and remove the yoke lock nut and lift off the actuator.
4. Loosen and remove the union nut (4). Separate the bonnet (2) from the body (1).
5. With the bonnet and body apart, the inner valve can be removed from the bonnet and the seat can be removed from the body.
6. Unthread the packing gland (8) and remove from the bonnet.
7. Using a brass or aluminum rod up through the bonnet, gently tap the lower adaptor (5) until the packing components loosen and fall out. Notice the order of each of component as it falls out of the packing cavity.
8. Clean and inspect the cavity using solvent and a soft brush. DO NOT use sandpaper or abrasives. Any visible marks can cause leakage.
9. If damage to the bore is noticed, the bonnet will need to be replaced.
10. Use silicone grease or Krytox lubrication on the lower packing adaptor (5) and slide gently to the bottom.
11. Using a plastic tweezers, lower the first ring into the cavity bore sideways until the ring is past the threads and entrance.
12. Using a 1/8 inch diameter plastic rod, tip the ring over so that the concave side is pointing to the bottom of the cavity.
13. Using a 5/16 inch diameter plastic rod, push the ring to the bottom of the cavity.
14. Repeat to install the remaining packing rings.
15. Insert the upper packing follower (7) into the cavity, on top of the last ring.
16. Lubricate the packing gland threads and thread it into the bonnet until it is finger tight. At this point a new inner valve set may be installed.
17. Insert the inner valve into and through the packing.
18. Install the seat into the body. Tighten to 10 ft-lb.
19. Insert the bonnet into the body. Install the union nut over the bonnet and thread onto the body until it is hand tight.
20. Stroke the inner valve (do not rotate) to check for alignment of the inner valve in the seat. If dragging occurs, do not proceed until the inner valve can be replaced or inspected.
21. If the inner valve strokes smoothly, tighten the union nut 290…320 ft-lb.
22. With the actuator still at stroke, reinstall the actuator, tighten the yoke lock nut and reconnect the inner valve to the actuator stem connector.
23. Check and adjust the closed position according to previous instruction.
24. Tighten any jam nuts on the stem for positive stops and/or position indication.
25. Test and adjust packing according to previous instructions.

HP-10 ANGLE* HIGH PRESSURE VALVE ASSEMBLY (10,000 PSI) 1/4" NPT

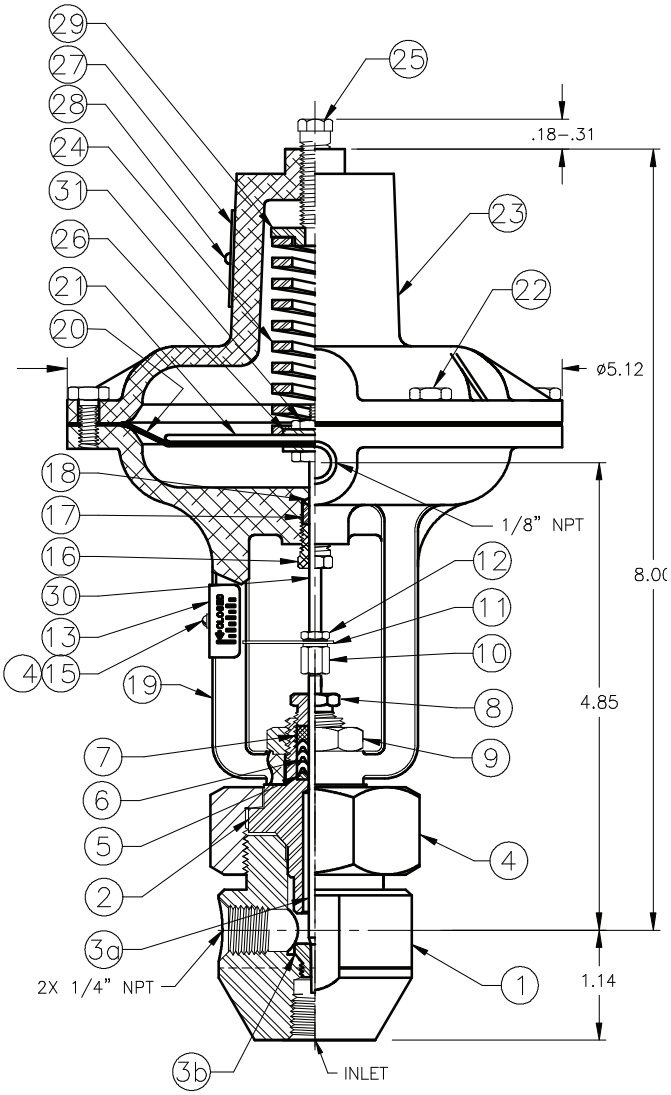

* Angle body shown. Globe configuration available.

HP-10 Parts and Materials List

QUANTITIES ARE FOR ONE (1) UNIT ONLY				
ITEM NO.	PART NO.	QTY	DESCRIPTION	MATERIAL
1	527494–00	1	ANGLE BODY	
2	527609–00	1	BONNET	
3a	NOTE 1.	1	INNERVALVE	
3b	NOTE 1.	1	SEAT	
4	500232–00	1	UNION NUT	
5	520580–0019	1	ADAPTOR	PFA
6		1	PACKING	
7	520582–0001	1	FOLLOWER	PFA
8	520581–00	1	PACKING GLAND	
9	520583	1	LOCK NUT	303 SST
10	520997	1	CONNECTOR	300 SER SST
11	510262	1	TRAVEL POINTER	300 SER SST
12	410009	1	STEM NUT	300 SER SST
13	520986–0002	1	TRAVEL SCALE	300 SER SST
14	400001–0072	1	SCREW	300 SER SST
15	430002–0022	1	FLAT WASHER	300 SER SST
16	525025–0001	1	O–RING GLAND	316 SST
17	522761	1	O–RING FOLLOWER	TFE
18	511828	1	O–RING	SILICONE RUBBER
19	520995–0002	1	PRESS CASE & YOKE	ALUMINUM
20	510261–0001	1	DIAPHRAGM	BUNA/ NYLON
21	520994–0001	1	DIAPHRAGM PLATE	STEEL/ ZINC PL
22	400029–0003	6	HEX HD.RIM SCREW	300 SER SST
23	520996–0002	1	SPRING CASE	ALUMINUM
24	510031–0040	1	SPRING	STEEL
25	520990–0002	1	SPRING ADJUSTOR	300 SER SST
26	430002–0037	2	WASHER	300 SER SST
27	512416–0002	1	NAMEPLATE	300 SER SST
28	400018–0012	2	DRIVE SCREW	300 SER SST
29	520991–0001	1	SPRING SEAT	ALUMINUM
30	520992	1	TOPWORKS STEM	316 SST
31	410030–0001	2	LOCKNUT	300 SER SST

HP-10 GLOBE HIGH PRESSURE VALVE ASSEMBLY (10,000 PSI) 1/4" NPT

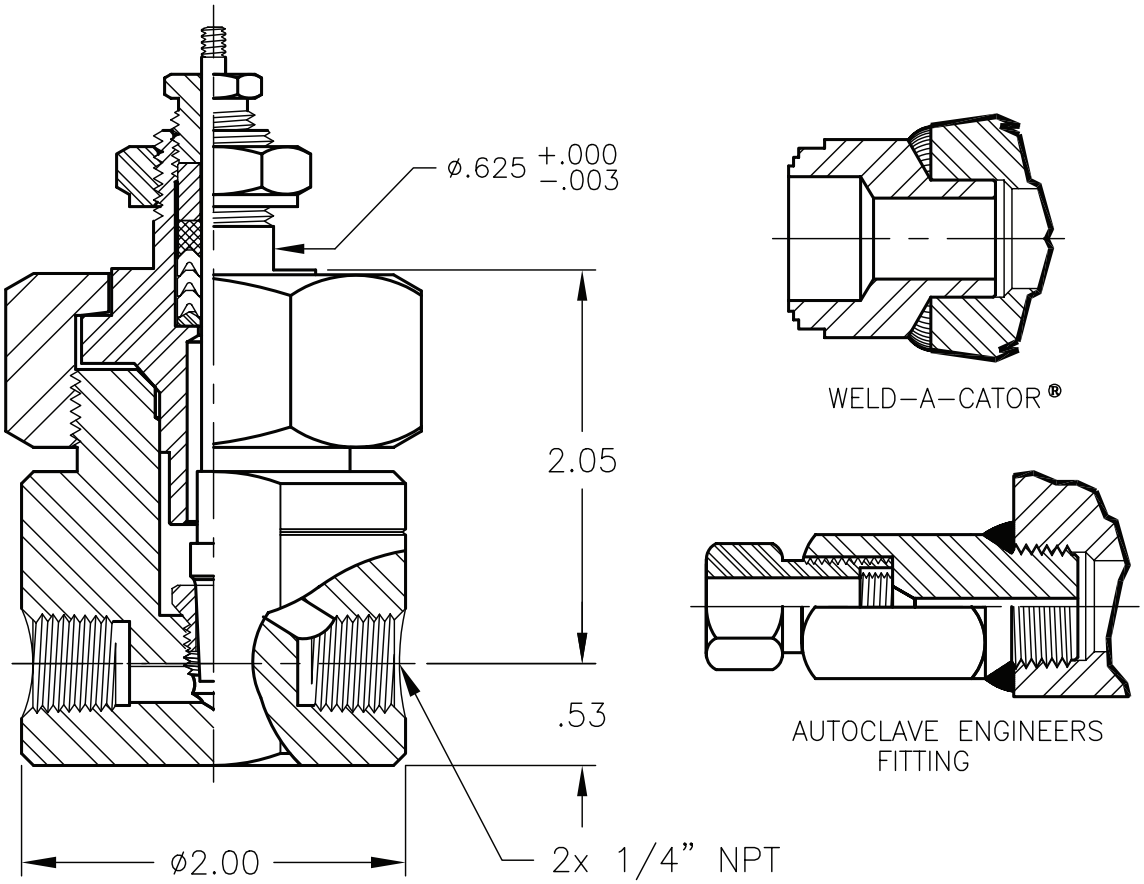

Control. Manage. Optimize.

Research Control is a registered trademark of Badger Meter, Inc. Other trademarks appearing in this document are the property of their respective entities. Due to continuous research, product improvements and enhancements, Badger Meter reserves the right to change product or system specifications without notice, except to the extent an outstanding contractual obligation exists. © 2021 Badger Meter, Inc. All rights reserved.

www.badgermeter.com