A Badger Meter® Brand

Water Quality Monitor

Model Q45C4 External DC Power 4-Electrode Conductivity Transmitter

Badger Meter

ATI-UM-04467-EN-02 (October 2024)

User Manual

CONTENTS

Introduction 5
General 5
Features 5
Q45C4 System Specifications 6
Q45C4 Performance Specifications 7
Analyzer Mounting 8
General 8
Wall or Pipe Mount 9
Sensor/Flowcell Mounting 11
General 11
Sealed Flowcell 13
Flow Tee Mounting 14
Union Mounting 15
Submersion Mounting 17
Insertion Mounting 18
Electrical Installation 20
General 20
External Power 21
Voltage Outputs 22
Sensor Wiring 23
Direct Sensor Connection 24
Junction Box Connection 25
Configuration 26
User Interface 26
Keys 26
Display 27
Software 28
Software Navigation 28
Measure Menu [MEASURE] 30
Calibration Menu [CAL] 30
Configuration Menu [CONFIG] 31
Control Menu [CONTROL] 32
Diagnostics Menu [DIAG] 32

Calibration 34
Overview and Methods. 34
1-Point Calibration Explained 34
Zero Cal Calibration Explained. 34
Performing a Sensor Zero Calibration. 34
Performing a 1-Point Calibration 35
Temperature Calibration 36
System Maintenance 37
System Checks 37
Instrument Checks. 37
Cleaning the Sensor 37
Troubleshooting 38
Display Messages 39
Spare Parts 41

INTRODUCTION

General

The Model Q45C4 Conductivity monitor/analyzer provides an extremely versatile measurement system for monitoring and control of conductivity over the range of 1 µS/cm…2.000 Siemens/cm.

Q45C4 monitors are available in three electronic versions: a loop-powered 2-wire transmitter, a dual AA battery operated portable unit with two voltage outputs and a 5…17V DC externally powered unit with two voltage outputs. This manual refers to the 5…17V DC external power transmitter version.

In all configurations, the Q45C4 displays conductivity on the main display and total dissolved solids (TDS), sensor temperature and output loop current on the secondary line of the custom display.

⚠ WARNING

NOT FOLLOWING OPERATING INSTRUCTIONS MAY IMPAIR SAFETY.

NOTE: Due to the high degree of flexibility of the Q45 system options, it is important to note areas of the operating manual that detail these optional features.

Features

- Standard Q45C4 transmitters are fully isolated, externally powered for V DC applications.
- High accuracy, high sensitivity system, measures from 1…2,000,000 µS through seven internal automatic ranges. User display ranges include 2000 µS, 2.000 mS, 20.00 mS, 200.0 mS, 2000 mS or 2.000 S.
- *Output Hold, Output Simulate, Output Alarm* and *Output Delay* Functions. All forced changes in output condition include bumpless transfer to provide gradual return to online signal levels and to avoid system control shocks on both analog outputs.
- Configurable for TDS display and signal output on one analog output.
- Large, high contrast, custom LCD display with LED backlight provides excellent readability in any light conditions. The secondary line of display uses 5 × 7 dot matrix characters for clear message display. Two of four measured parameters may be on the display simultaneously.
- 4-Electrode measurement system. Two of the electrodes are used to establish the sensor drive potential, while the other two sense the flow of current between the drive electrodes and maintain proper drive potential. Sensor diagnostics monitor electrode coating/fouling, sensor leaks and RTD condition. Diagnostic messages provide a clear description of any problem with no confusing error codes to look up. Messages are also included for diagnosing calibration problems.
- Quick and easy one-point calibration method and sensor zero-cal. To provide high accuracy, all calibration methods include stability monitors that check temperature and main parameter stability before accepting data.
- High accuracy Pt1000 temperature input. Temperature element can be user calibrated.
- Security lock feature to prevent unauthorized tampering with transmitter settings. All settings can be viewed while locked, but they cannot be changed.
- PEEK electrode insulator, custom rear PEEK sealing nut and triple O-ring rear seal (Viton and EPR) allow complete submersion of the sensor.
- Custom double-shield cross-linked cable with PE jacket for excellent chemical resistance.
- Pt1000 RTD. The temperature element used in Badger Meter sensors is highly accurate and provides a highly linear output.

Equipment bearing this marking may not be discarded by traditional methods in the European community after August 12, 2005, per EU Directive 2002/96/EC. End users must return old equipment to the manufacturer for proper disposal.

Q45C4 System Specifications

Displayed Parameters	Main input, 0 µS…2S (2,000,000 µS) Sensor temperature, –10.0…210.0° C (23…410° F) Voltage Output, 0…2.5V DC Sensor slope Model number and software version Timer Status
Main Parameter Ranges	Automatic or manual selection of one of the following display ranges: 0…2000 µS 0.0…2.000 mS 0.00…20.00 mS 0.0…200.0 mS 0…2000 mS 0.000…2.000 S
Display	0.75 in. (19.05 mm) high 4-digit main display with sign 12-digit secondary display, 0.30 in. (7.62 mm) 5 × 7 dot matrix
Keypad	4-key membrane type with tactile feedback, polycarbonate with UV coating
Weight	1 lb (0.45 kg)
Ambient Temperature	Analyzer Service, –20…60° C (–4…140° F) Storage, –30…70° C (–22…158° F)
Ambient Humidity	0…95%, indoor/outdoor use, non-condensing to rated ambient temperature range
Altitude	Up to 2000 m (6562 ft)
Electrical Certification	Ordinary location, cCSAus (CSA and UL standards - both approved by CSA), pollution degree 2, installation category 2
EMI/RFI Influence	Designed to EN 61326-1
Output Isolation	600V galvanic isolation
Temperature Input	Pt1000 RTD with automatic compensation
Sensor	Fully isolated 4-electrode sensor design for direct measurement. 1 in. NPT process connection.
Measuring Range	0.000…2.000 S/cm
Wetted Materials	Titanium, PEEK, Viton, EPR (316SS when sensor is submersion mounted)
Temperature Compensation	Pt1000 RTD
Sensor Cable	6 Conductor plus 2 shields,
Temperature Pressure Range	The choice of sensor material/mounting option and the hardware used to mount the sensor determines the temperature and pressure ratings. Please consult the factory for relevant temperature and pressure rating information.
Maximum Flow Rate	10 ft (3 m) per second
Max. Sensor-Analyzer Distance	60 ft (18.2 m)
Power	5…17V DC
Enclosure	NEMA 4X, polycarbonate, stainless steel hardware, weatherproof and corrosion resistant, HWD: 4.40 in. (111.76 mm) x 4.40 in. (111.76 mm) x 3.50 in. (88.90 mm)
Mounting Options	Wall or pipe mount bracket standard. Bracket suitable for either 1.50 in. or 2 in. ID U-bolts for pipe mounting.
Conduit Openings	Two PG-9 openings with gland seals. One 1 in. NPT opening with plug.
DC Cable Type	Belden twisted-pair, shielded, 22 gauge or larger

Q45C4 Performance Specifications

Accuracy	0.5% of user range, or better (±2 µS)
Repeatability	0.2% of user range, or better (±2 µS)
Sensitivity	0.05% of user ranges (±2 µS)
Stability	0.2% of user range per 24 hours, non-cumulative
Warm-Up Time	7 seconds to rated performance
Supply Voltage Effects	DC version only, ±0.05% of user range
Instrument Response Time	6 seconds to 90% of step input at lowest setting
Temperature Drift	Span or zero, 0.04% of span/°C

ANALYZER MOUNTING

General

All Q45 Series instruments offer maximum mounting flexibility. A bracket is included with each unit that allows mounting to walls or pipes. In all cases, choose a location that is readily accessible for calibrations. Also consider that it may be necessary to use a location where solutions can be used during the calibration process. To take full advantage of the high contrast display, mount the instrument in a location where the display can be viewed from various angles and long distances.

Locate the instrument in close proximity to the point of sensor installation. This allows easy access during calibration. The standard cable length of the conductivity sensor is 20 feet. For sensor cables longer than 20 feet, use the optional junction box (07-0100) and sensor interconnect cable (31-0057).

See *Figure 3 on page 10* and *Figure 4 on page 10* for detailed dimensions of each type of system.

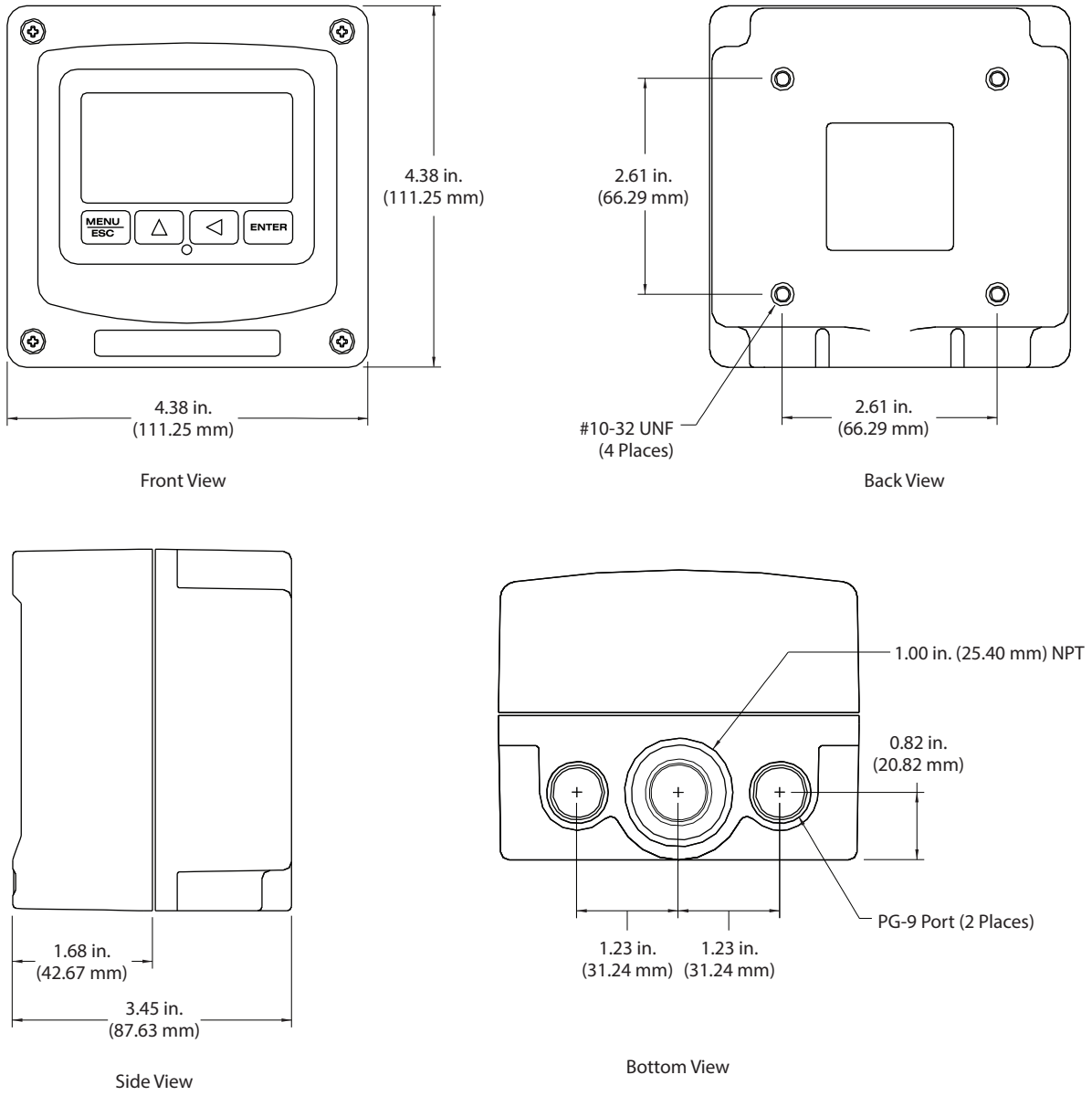

Figure 1: Q45 Enclosure dimensions

Wall or Pipe Mount

A PVC mounting bracket with attachment screws is supplied with each transmitter. The multipurpose bracket is attached to the rear of the enclosure using the four flat head screws. The instrument is then attached to the wall using the four outer mounting holes in the bracket. These holes are slotted to accommodate two sizes of U-bolts that may be used to pipe mount the unit. Slots accommodate U-bolts designed for 1-1/2 or 2 inch pipe. The actual center to center dimensions for the U-bolts are shown in *Figure 2*.

NOTE: These slots are for U-bolts with 1/4-20 threads. The 1-1/2 inch pipe U-bolt (2 inch ID clearance) is available from Badger Meter in type 304 stainless steel (47-0005).

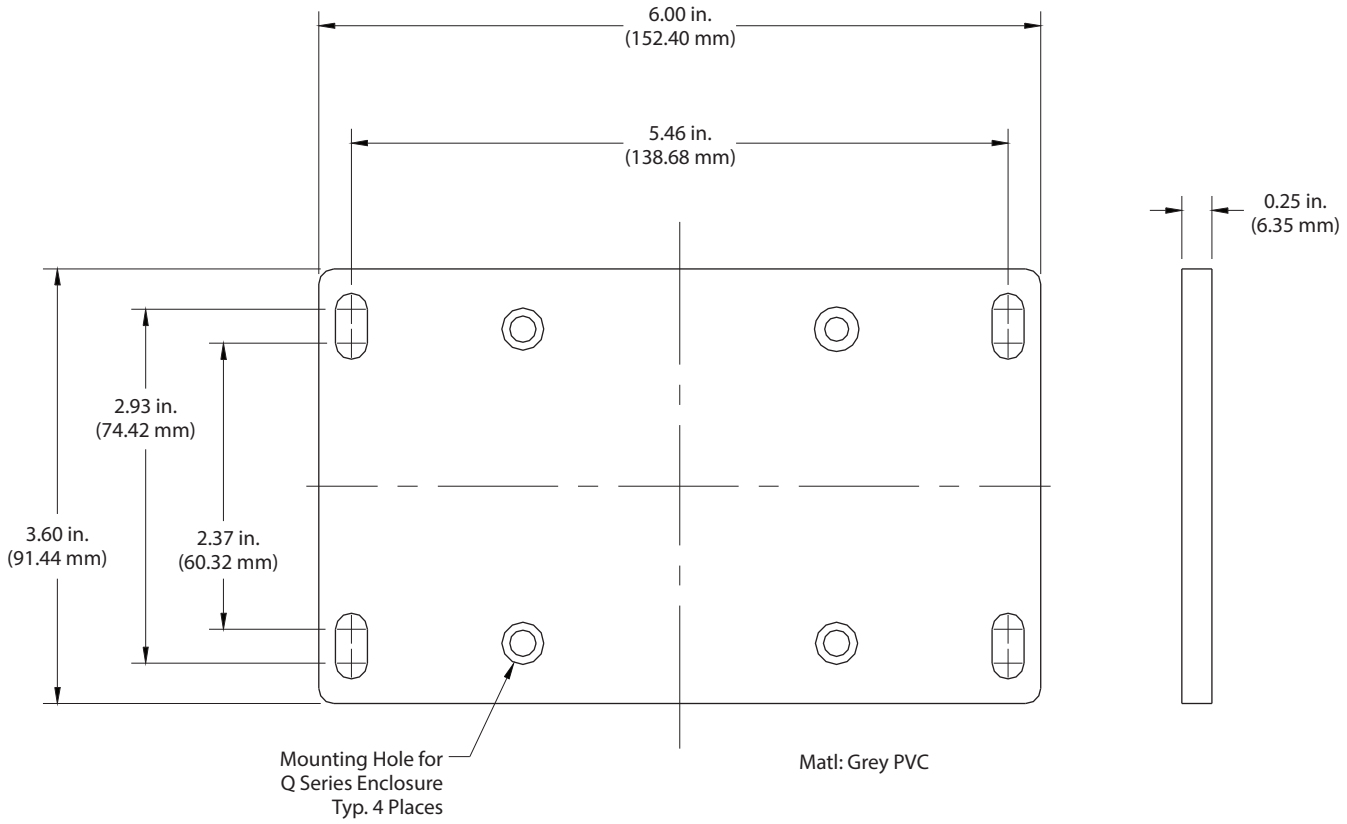

Figure 2: Wall or pipe mount bracket

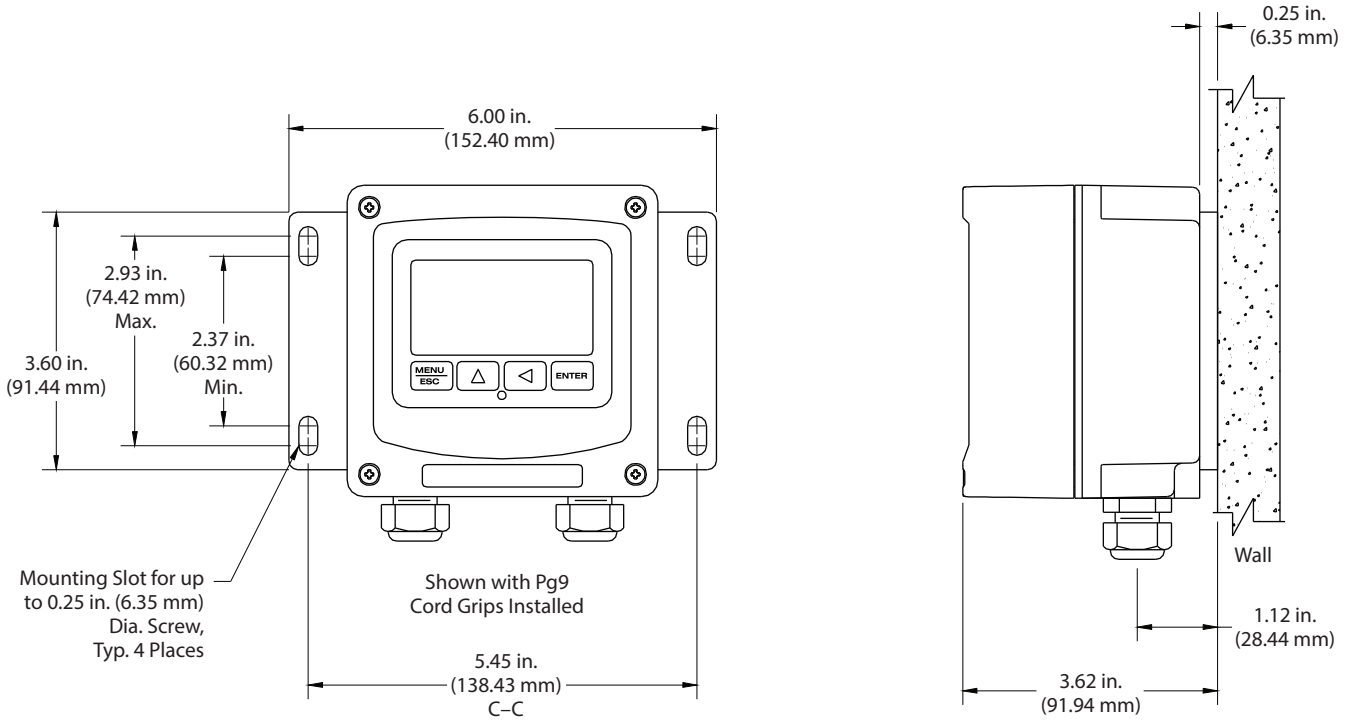

Figure 3: Wall mounting diagram

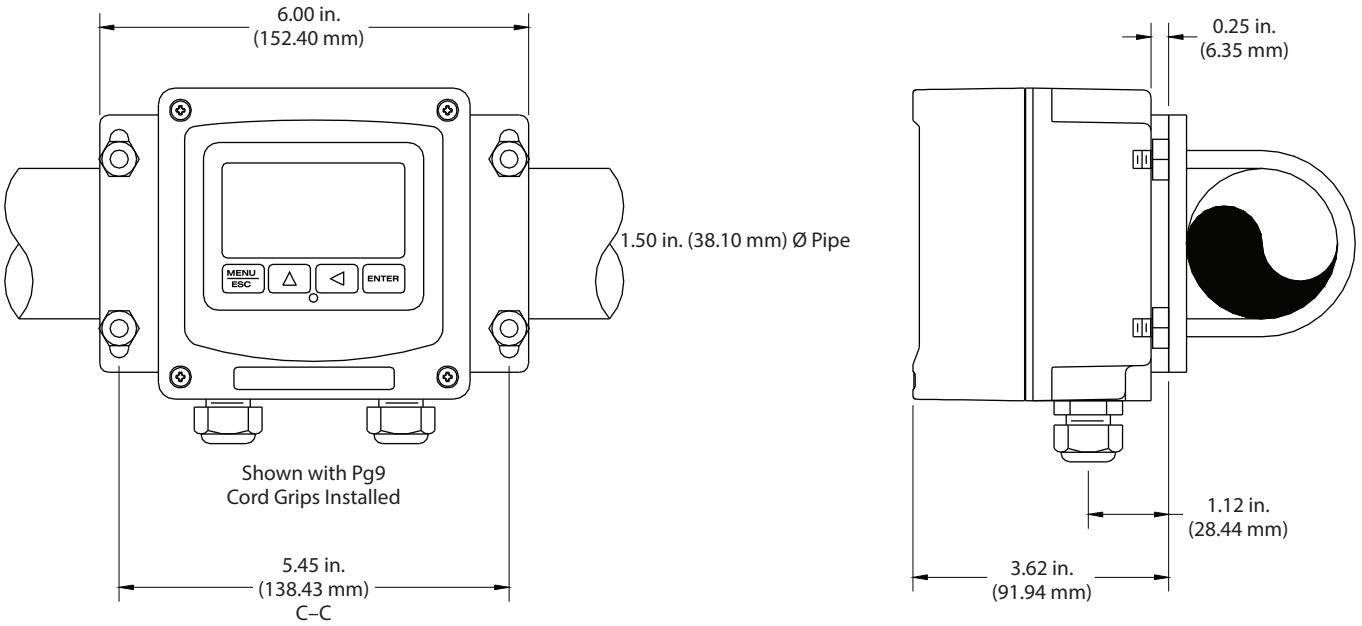

NOTE: Mounting plate hole spacing can support up to 2 in. (50.80 mm) ø pipe max.

Figure 4: Pipe mounting diagram

SENSOR/FLOWCELL MOUNTING

General

The Q25C4 Conductivity Sensor is designed for industrial and municipal process applications. Mounting options include flow-through, submersion, insertion (special hardware required) or sanitary mount depending on the type of sensor purchased. The sensor-to-analyzer distance must not exceed 60 feet (18.2 meters).

Calibrate the sensor before placing it into the process. See *"Calibration" on page 34* for detailed calibration instructions.

The sensor comes with a removable guard that surrounds the electrode face, except for flow type sensors. This guard minimizes interference effects in tight locations where the sensor face is close to surrounding objects. If it is removed, take care to leave at least one cubic inch of space in front of the electrodes. If the guard is to be used, the sensor must be calibrated with it in place, since the guard affects the sensor cell constant.

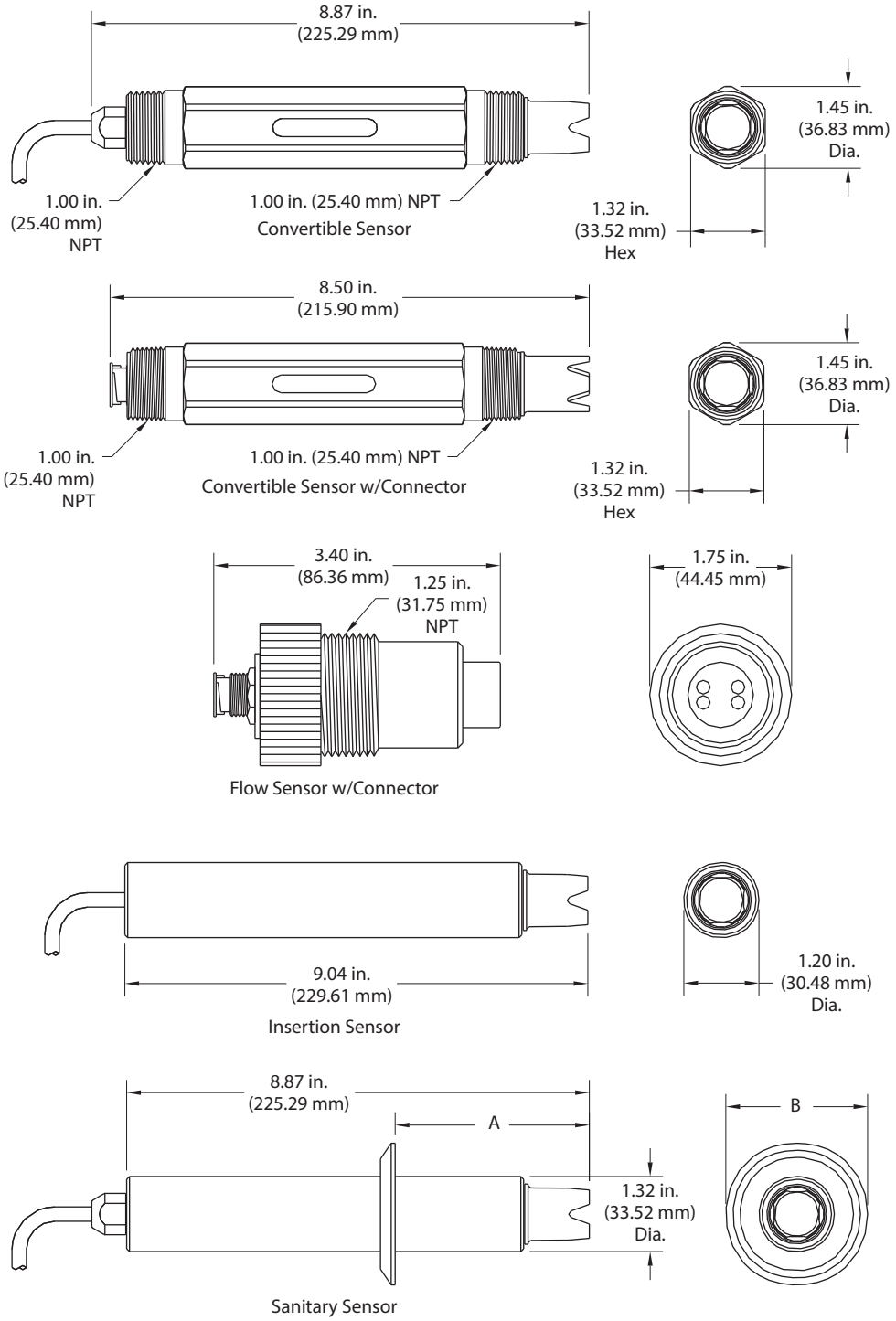

Sensor Size	A	B
1-1/2 in.	2.75 in. (70.00 mm)	1.98 in. (50.40 mm)
2 in.	3.50 in. (88.90 mm)	2.50 in. (63.50 mm)

Figure 5: Q25C4 Sensor dimensions

Sealed Flowcell

Applications where the sample inlet flow is well controlled can use a simpler sealed flowcell. Using this flowcell requires that flow be controlled externally to about 400 cc/min. Variable flow rate or variable pressure causes unstable readings in this flowcell. Badger Meter offers a special flow control element that can be used ahead of this flowcell on the incoming sample line. The flow control is part number (55-0048). It controls the inlet flow rate at 400 cc/min. with inlet pressure variations from 5…150 PSIG. A 50 micron y-strainer ahead of the flow control element is recommended. The sealed flowcell provides a drain vent with check valve to avoid pulling a vacuum on the flow chamber.

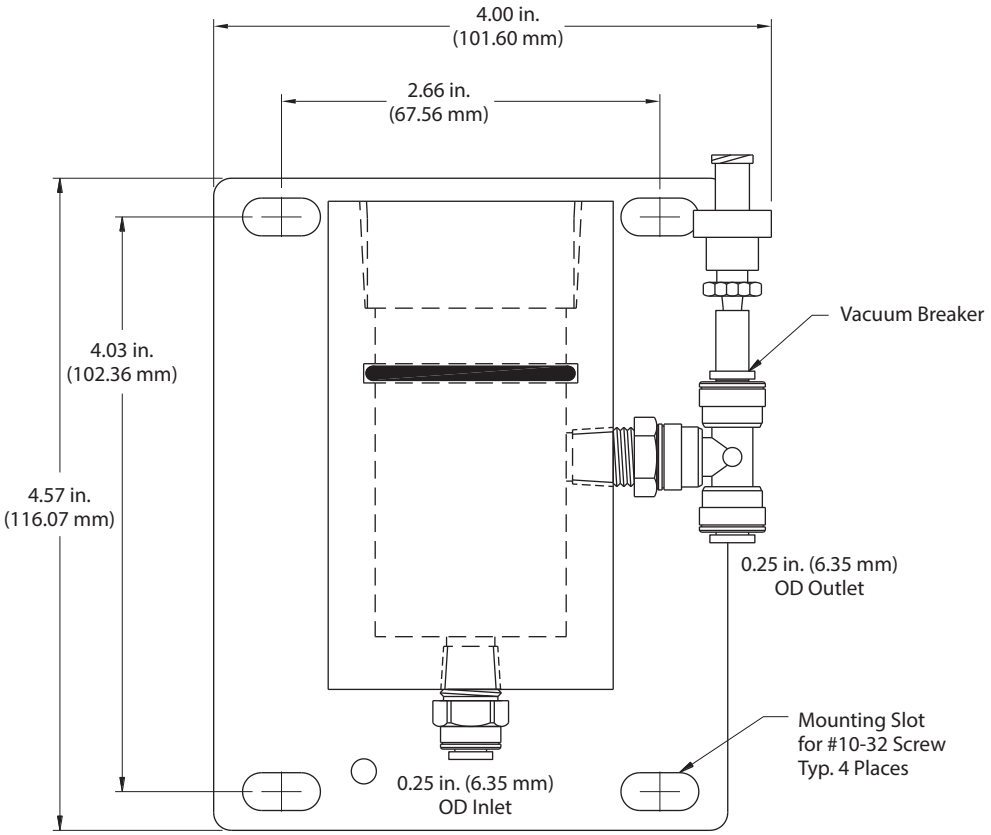

Figure 6: Sealed flowcell details

Flow Tee Mounting

Convertible sensors may be used in a one inch flow tee as shown in *Figure 7*. The flow tee is a modified pipe fitting that accommodates the pipe thread on the front of the sensor. Sample must flow directly against the face of the sensor. The sensor may be mounted horizontally provided that the outlet flow is pointed up to avoid "air locking" in the tee.

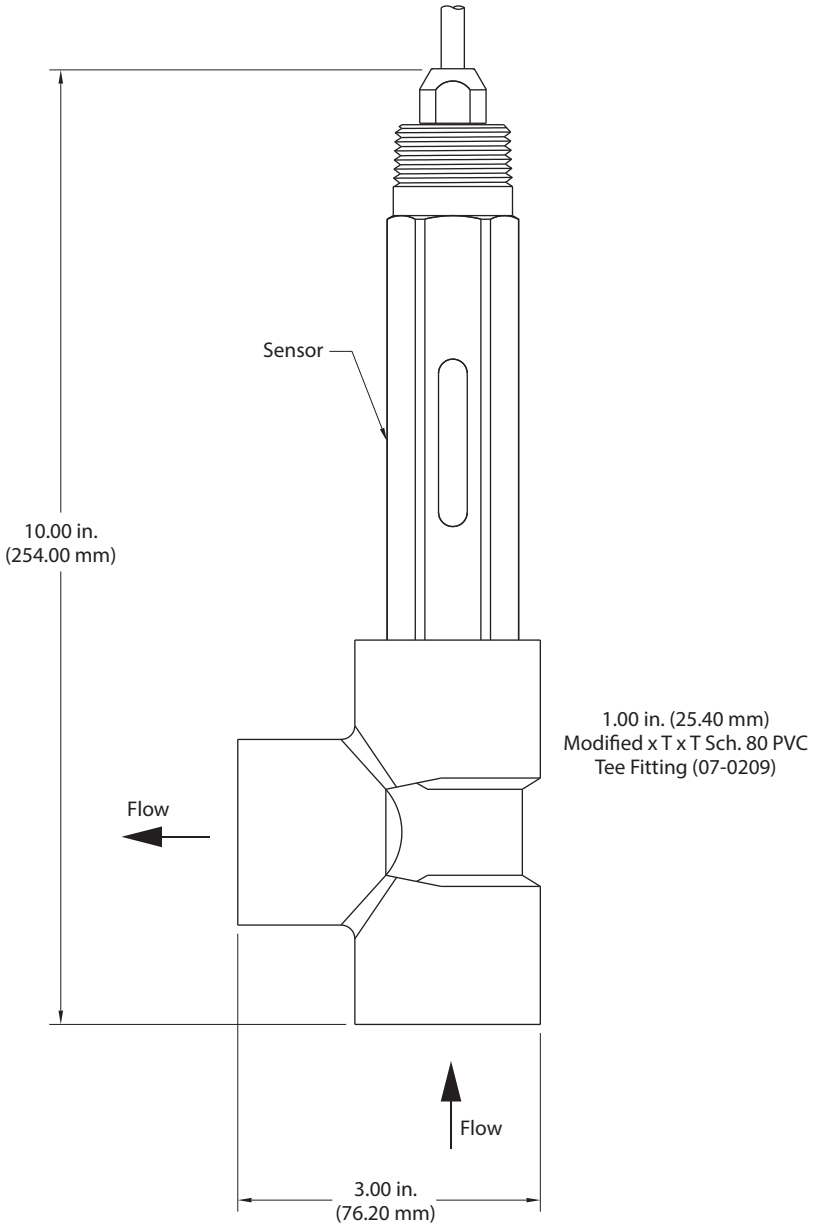

Figure 7: Flow through tee mount

Union Mounting

For mounting the sensor in larger pipe and allowing for easy sensor removal, a 1-1/2 inch of 2 inch union mount adapter system is available. This arrangement allows connection of the sensor to pipe sizes up to 2 inch (using adapters if necessary) while allowing easy removal without twisting sensor wires. Contact Badger Meter for part numbers and prices for union mount assemblies and associated pipe tees.

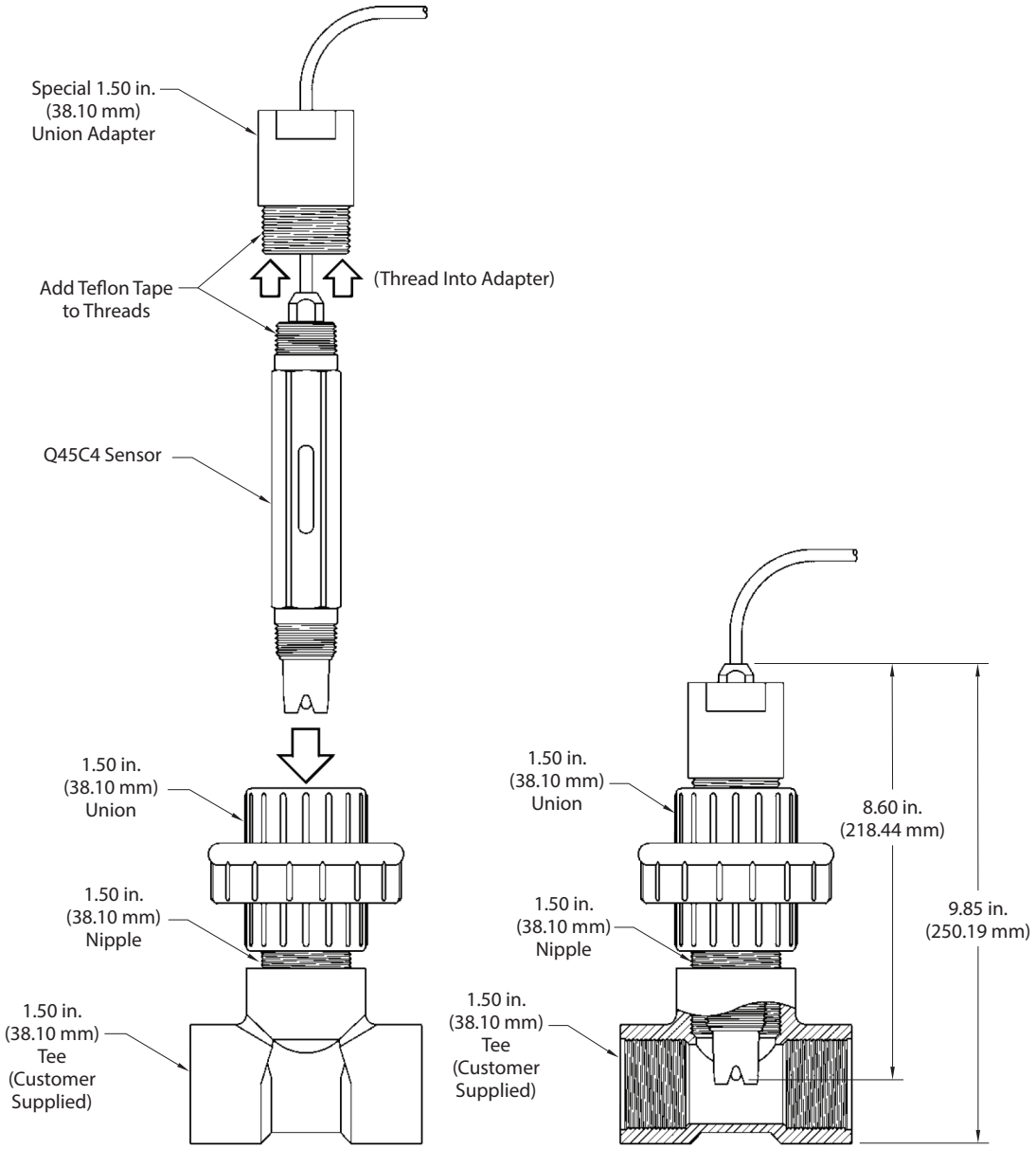

Figure 8: 1.50 in. Union mount

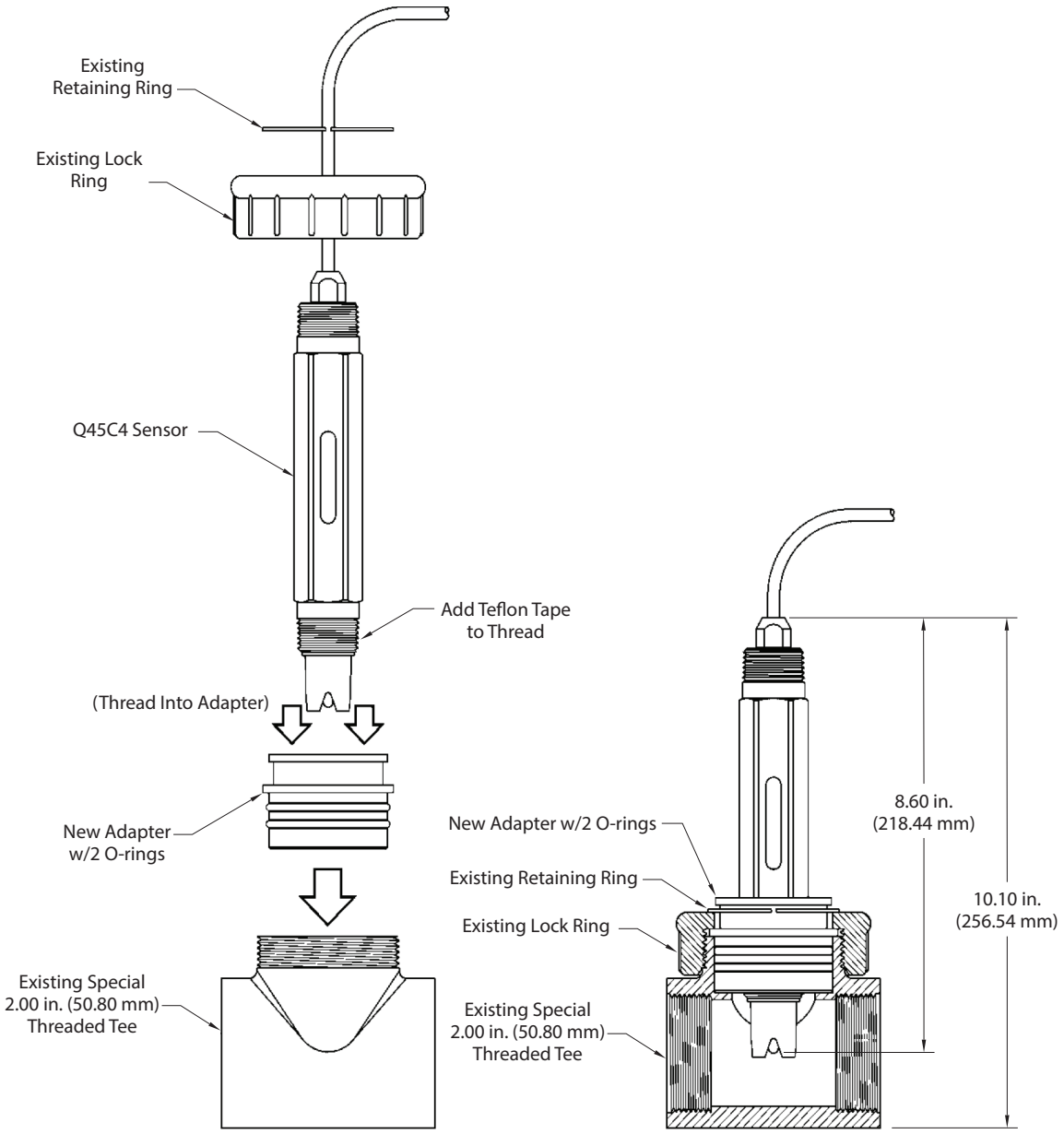

Figure 9: 2 in. Union mount

Submersion Mounting

When using this conductivity sensor for submersion applications, mount the sensor to the end of a 1 inch mounting pipe using a 1 inch coupling. Mounting assembly (00-0628) from Badger Meter shown in *Figure 10* is available for submersible applications. This assembly is designed to mount to standard handrails and facilitates insertion and removal of the sensor.

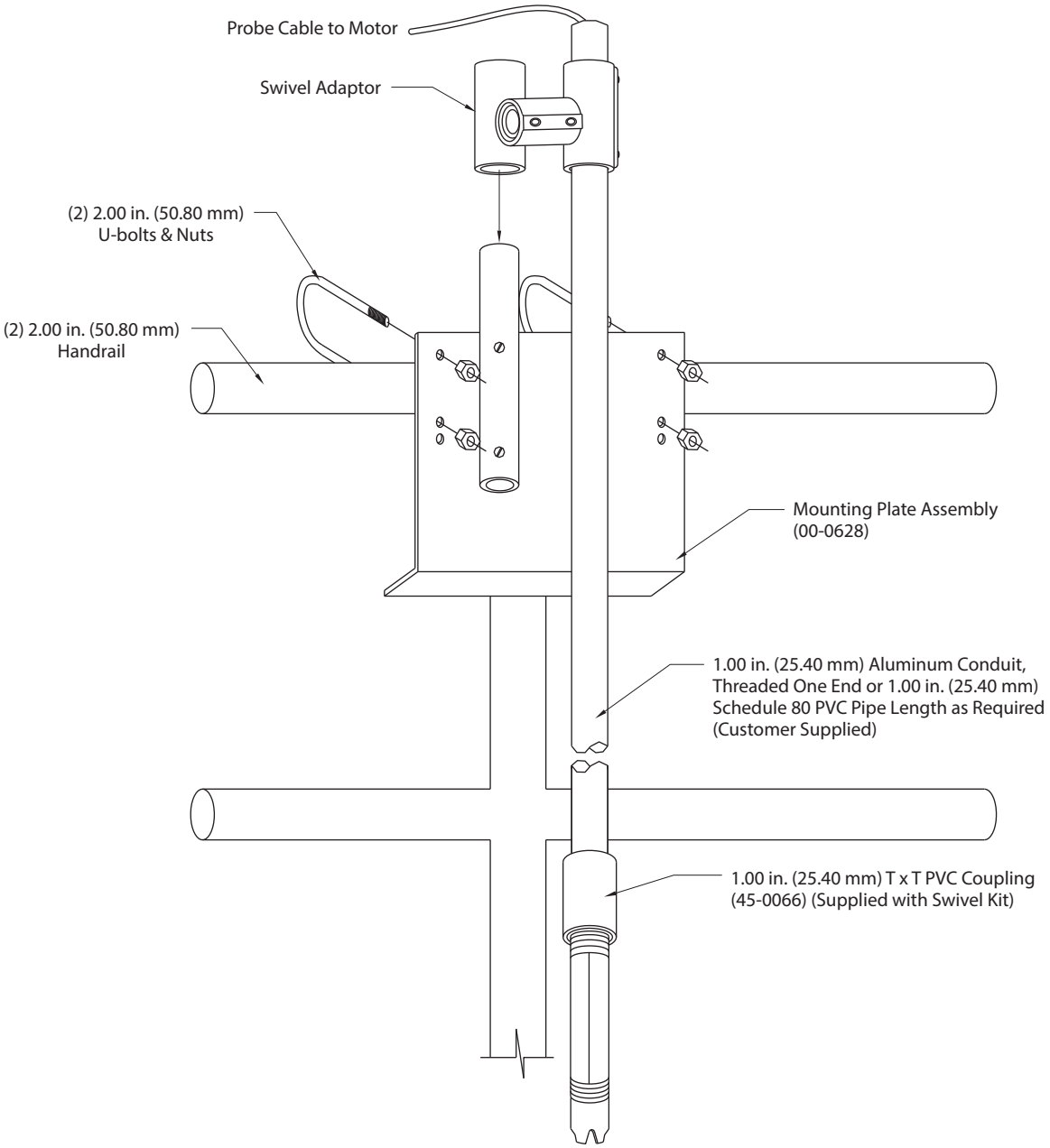

Figure 10: Sensor submersion mount

Insertion Mounting

Special insertion mounting hardware is available for applications requiring the removal of the sensor from a process line or tank without shutting off the sample flow in the line. *Figure 11* and *Figure 12 on page 19* show typical insertion assemblies. Separate manuals are available for the installation and operation of these assemblies.

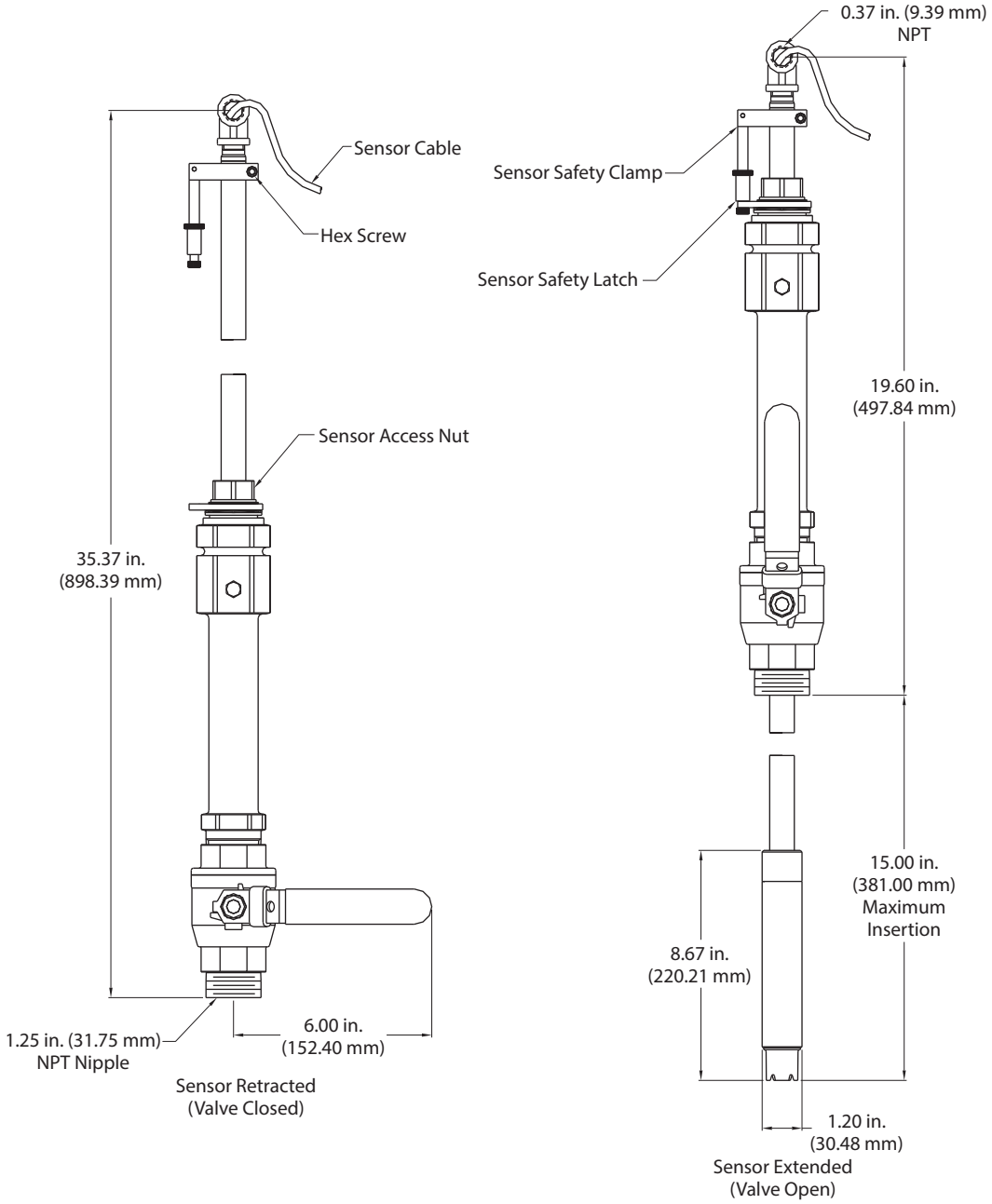

Figure 11: S.S. Sensor insertion mount

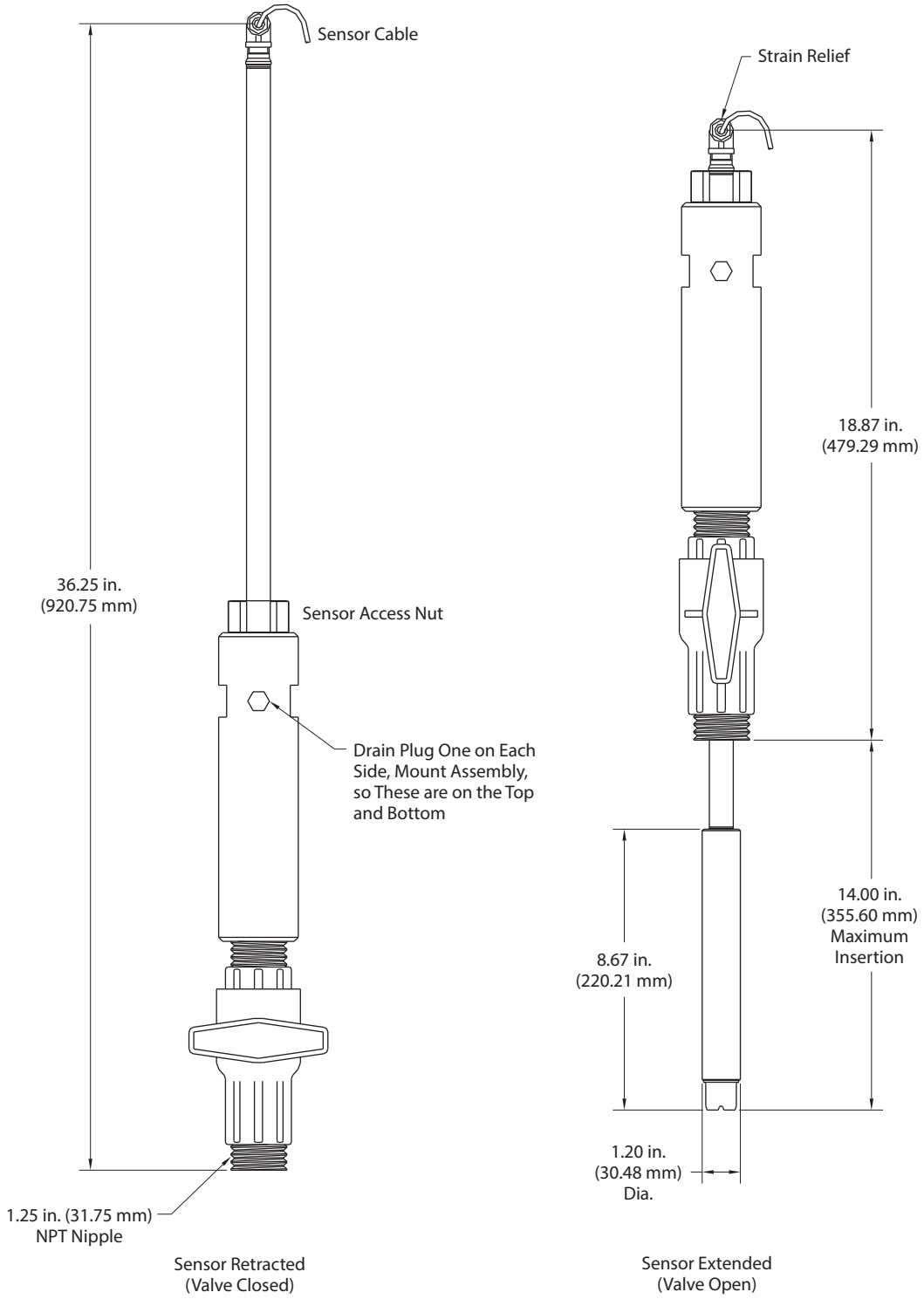

Figure 12: CPVC Sensor insertion mount

ELECTRICAL INSTALLATION

General

The Q45 5…17V DC Externally Powered Transmitter is designed for low power operation for solar power applications. Please verify the type of unit before connecting any power.

⚠ WARNING

DO NOT CONNECT AC LINE POWER TO THE PCB MODULE. SEVERE DAMAGE COULD RESULT.

IMPORTANT NOTES:

1. Use wiring practices that conform to all national, state and local electrical codes. For proper safety as well as stable measuring performance, it is important that the earth ground connection be made to a solid ground point. See *Figure 13 on page 21*.
2. Do NOT run sensor cables or instrument output wiring in the same conduit that contains AC power wiring. AC power wiring should be run in a dedicated conduit to prevent electrical noise from coupling with the instrumentation signals.
3. This analyzer must be installed by specifically trained personnel in accordance with relevant local codes and instructions contained in this operating manual. Observe the analyzer's technical specifications and input ratings.

External Power

Q45C4 units ordered with the external connection option are designed for applications where power is to be supplied from an external source, and the two voltage outputs are to be wired to an external device. *Figure 15 on page 23* identifies the terminal connections for external powers.

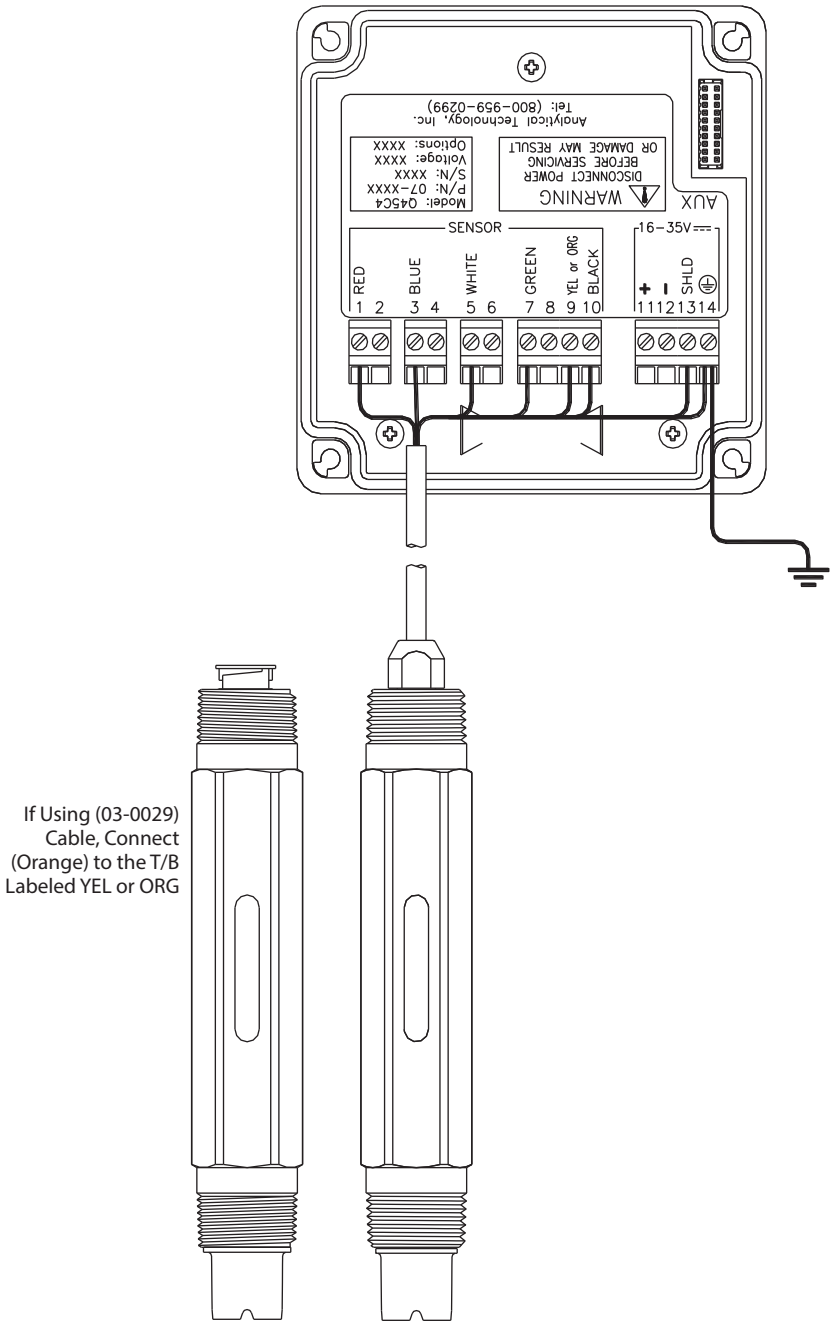

Figure 13: Sensor connection

NOTE: Earth ground into Terminal 14 is STRONGLY recommended. This connection can greatly improve stability in electrically noisy environments.

The external power board contains three switch assemblies as shown in *Figure 14*.

The first **(S1)** is an On/Off slide switch. This switch must be in the ON position for operation. Turn it to OFF if you do not intend to operate the monitor in the next week or two.

The second switch assembly **(S2)** contains two switches, the one on the left marked *LOCK* and the one on the right marked *MODE*. The function of these two slide switches are as follows:

- **LOCK**
  This switch is used to define how the monitor turns on and off. This switch is normally in the OFF position. With the lock switch OFF, the monitor turns on manually using the MENU key on the front of the monitor. With the lock switch in the ON position, the monitor is always on when there is enough power to run the monitor. The ON position is normally used when operating from an external power supply intended for continuous operation.
- **MODE**
  This switch is reserved for Battery Powered Operation. **(No Function when used with External Power Transmitter.)**

The third switch assembly is a single slide switch **(S3)** which defines whether the 0…2.5V DC signals from the monitor are isolated or non-isolated. Output isolation is not required when outputs are connected to a data logging device. However, if the outputs are connected to external devices, putting this switch in the ISO position protects against possible ground loops. The isolation circuit slightly increases the power requirement of the monitor.

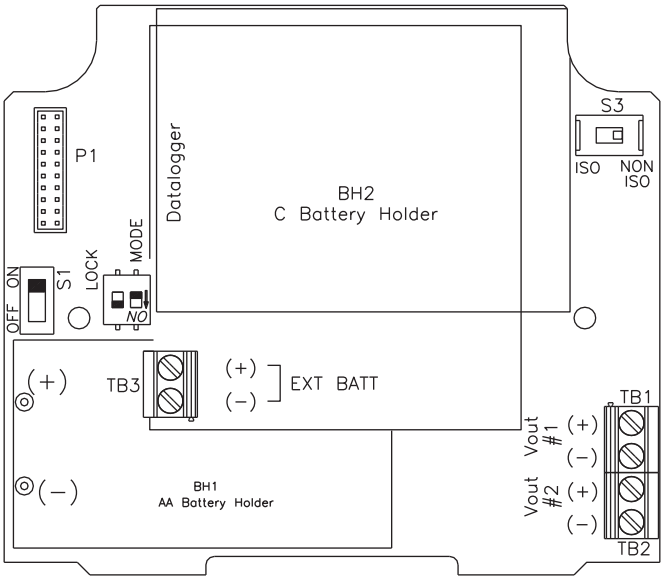

Figure 14: External power board

Voltage Outputs

There are two sets of analog voltage outputs on the board that may be used to send isolated data back to remotely located recorders, PLC's and more. Output #1 is used only for conductivity, and Output #2 can be used for either conductivity or temperature.

Sensor Wiring

The sensor cable can be quickly connected to the Q45 terminal strip by matching the wire colors on the cable to the color designations on the label in the monitor. A junction box is also available to provide a break point for long sensor cable runs. Route signal cable away from AC power lines, adjustable frequency drives, motors or other noisy electrical signal lines. Do not run sensor or signal cables in conduit that contains AC power lines or motor leads.

NOTE: When installing conductivity monitors and sensors, we recommend keeping the sensor cable as short as is practical. This minimizes potential noise problems.

Standard convertible sensors, insertion sensors and sanitary sensors have cable permanently attached to the sensor. This cable contains double shielded conductors to minimize noise problems in heavy industrial environments. Convertible sensors with connectors and flow type sensors use a slightly different cable assembly with only a single shield. This assembly is sufficient for many applications where EMI/RFI problems are not severe. *Figure 15* and *Figure 16* show the two different cable assembly terminations.

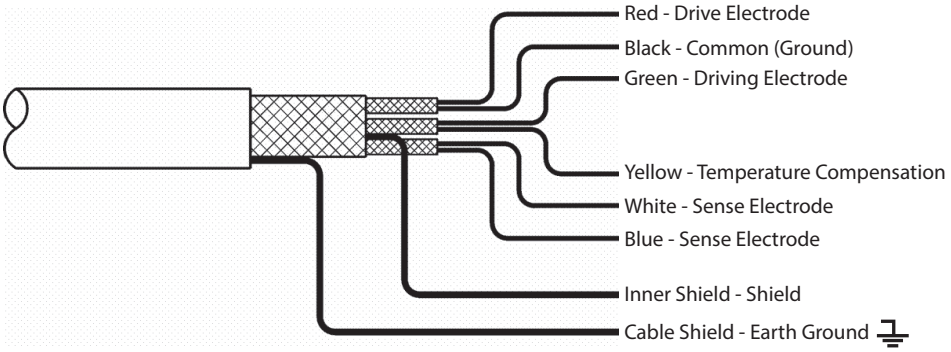

Figure 15: Standard double shielded cable

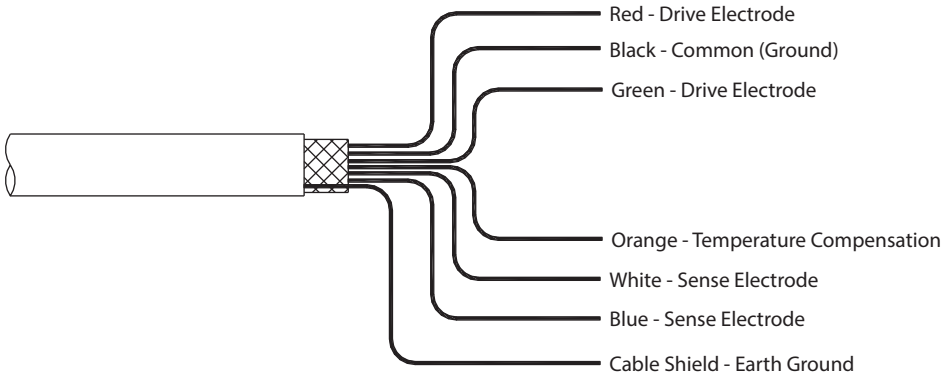

Figure 16: Detachable single shielded cable

⚠ DANGER

DO NOT CONNECT SENSOR CABLE TO POWER LINES. SERIOUS INJURY MAY RESULT.

Take care to route sensor cable away from AC power lines, adjustable frequency drives, motors or other noisy electrical signal lines. Do not run signal lines in the same conduit as AC power lines. Run signal cable in dedicated metal conduit if possible. For optimum electrical noise protection, run an earth ground wire to the ground terminal in the transmitter.

CAUTION:
ONLY CUSTOM 6-WIRE SHIELDED INTERCONNECT CABLE FROM BADGER METER SHOULD BE USED WHEN CONNECTING THE MODEL Q25C4 SENSOR TO THE ANALYZER. THIS HIGH PERFORMANCE, DOUBLE SHIELDED, POLYETHYLENE JACKETED CABLE IS SPECIALLY DESIGNED TO PROVIDE THE PROPER SIGNAL SHIELDING FOR THE SENSOR USED IN THIS SYSTEM. SUBSTITUTED CABLES MAY CAUSE PROBLEMS WITH SYSTEM PERFORMANCE.

Direct Sensor Connection

Sensor connections are made in accordance with *Figure 13 on page 21*. The sensor cable can be routed into the enclosure through one of the cord grips supplied with the unit. Routing sensor wiring through conduit is only recommended if a junction box is to be used. Some loose cable is needed near the installation point so that the sensor can be inserted and removed easily depending on the installation type.

Cord grips used for sealing the cable should be snugly tightened after electrical connections have been made to prevent moisture incursion. When stripping cables, leave adequate length for connections in the transmitter enclosure as shown in *Figure 17*. The standard 20 foot sensor cable normally supplied with the system is already stripped and ready for wiring. This cable can be cut to a shorter length if desired to remove extra cable in a given installation. Do not cut the cable so short as to make installation and removal of the sensor difficult.

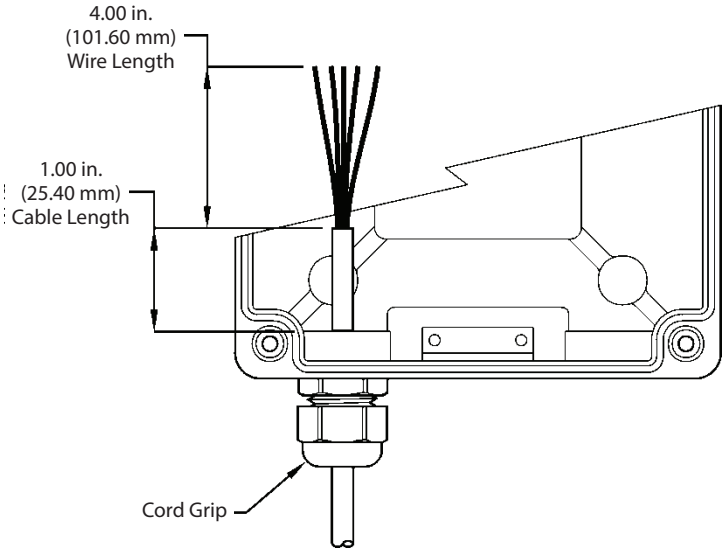

Figure 17: Sensor cable preparation

Junction Box Connection

For installations where the sensor is to be located more than 30 feet from the monitor (max. 60 feet), a junction box must be used. The junction box is shown in *Figure 18*. Consult drawing below for junction box wiring diagram.

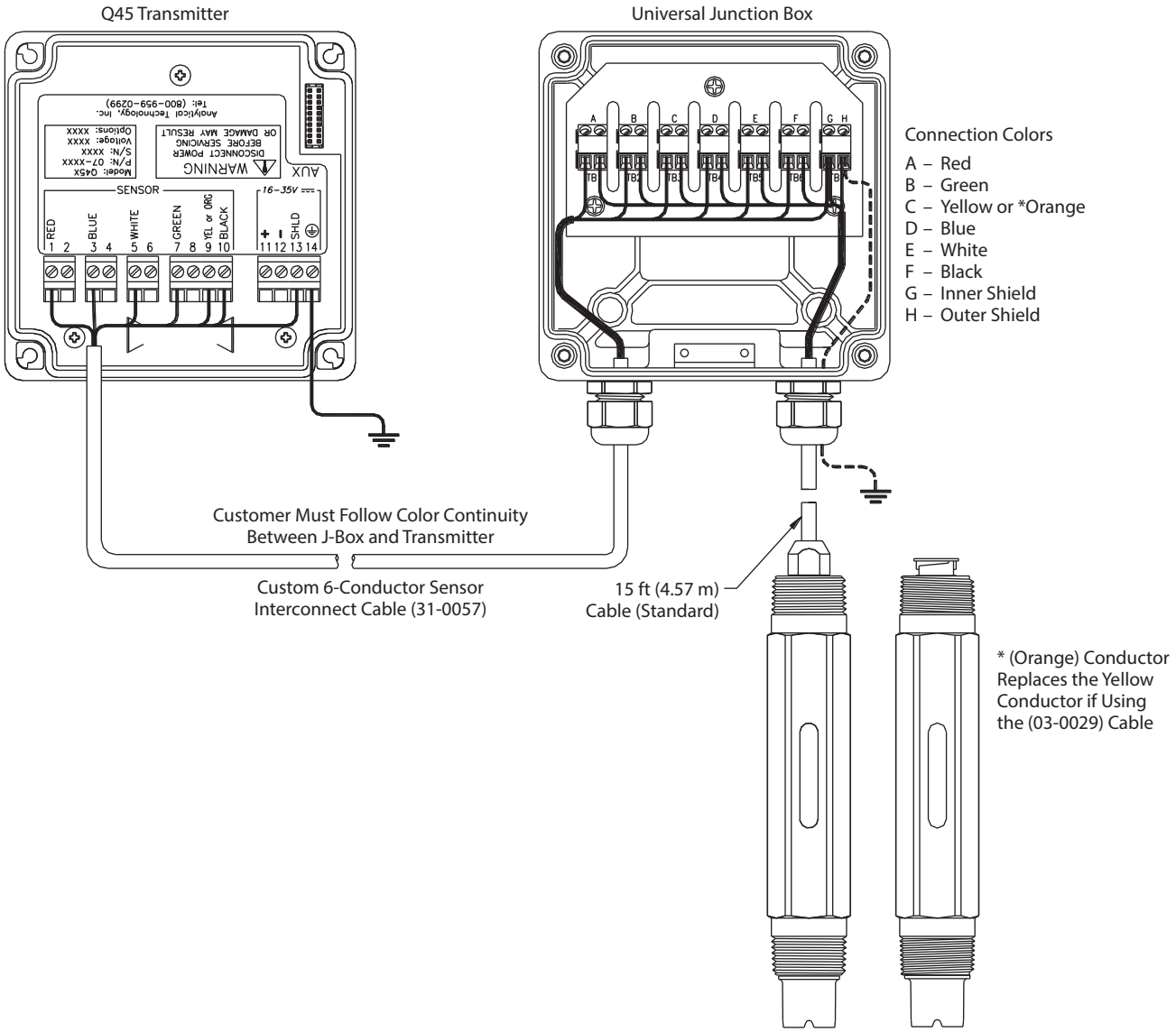

NOTE: If the (03-0029) sensor cable is used, use the (yellow) conductor in the interconnect cable to mate with the (orange) conductor in the sensor cable, when connecting the J-box to the transmitter.

Figure 18: Junction box interconnect wiring

CONFIGURATION

User Interface

The user interface for the Q45 Series instrument consists of a custom display and a membrane keypad. All functions are accessed from this user interface (no internal jumpers or pots, for example).

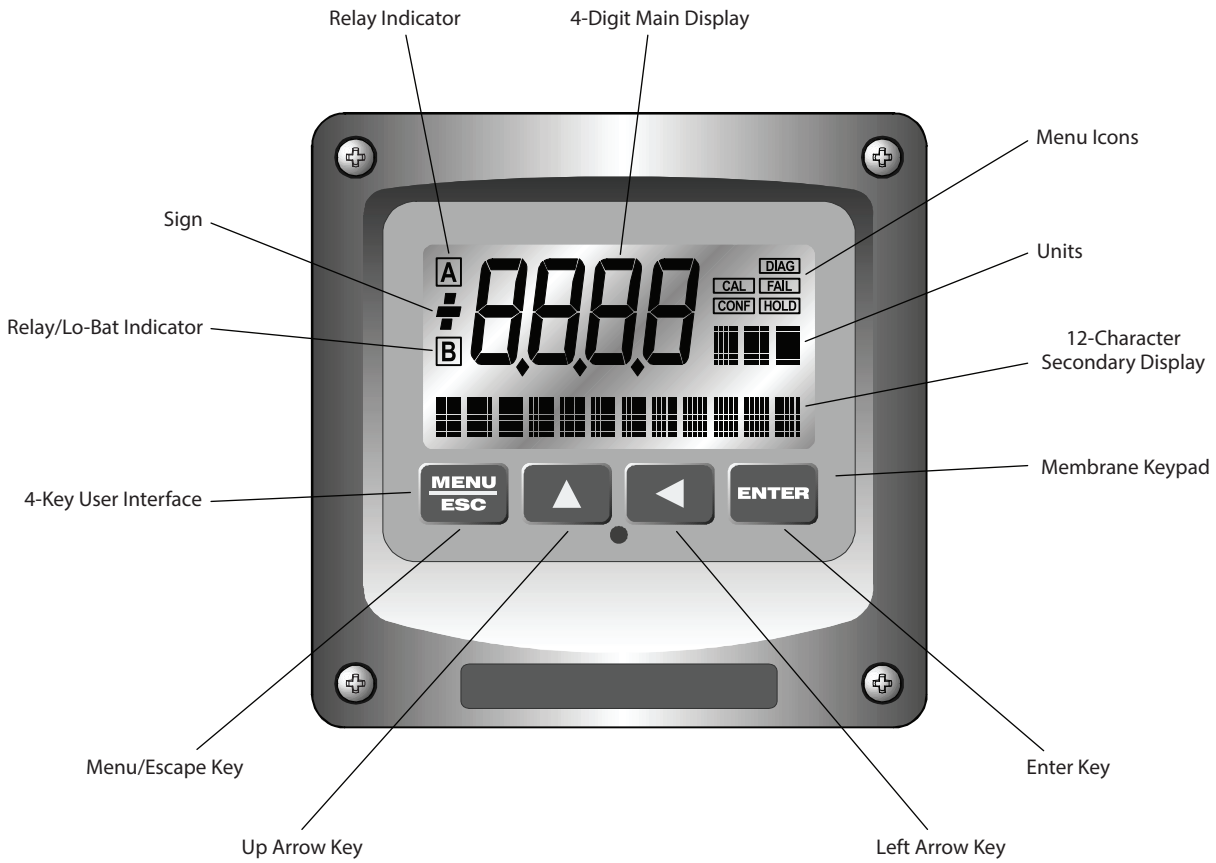

Figure 19: User interface

Keys

All user configurations occur through the use of four membrane keys. These keys are used as follows:

MENU/ESC	To scroll through the menu section headers or to escape from anywhere in software. The escape sequence allows the user to back out of any changes in a logical manner. Using the escape key aborts all changes to the current screen and backs the user out one level in the software tree. The manual refers to this key as either MENU or ESC, depending upon its particular function.
UP (arrow)	To scroll through individual list or display items and to change number values.
LEFT (arrow)	To move the cursor from right to left during changes to a number value.
ENTER	To select a menu section or list item for change and to store any change.

Display

The large custom display provides clear information for general measurement use and user configuration. There are three main areas of the display: the main parameter display, the secondary message line and the icon area.

Main Parameter

During normal operation, the main parameter display indicates the present process input with sign and units. This main display may be configured to display any of the main measurements that the system provides. During configuration, this area displays other useful setup information to the user.

Lower Line

During normal operation, the lower line of the display indicates user-selected secondary measurements that the system is making. This also includes calibration data from the last calibration sequence and the transmitter model number and software version. During configuration, the lower line displays menu items and setup prompts to the user. Finally, the lower line displays error messages when necessary. For a description of all display messages, see *"Display Messages" on page 39*.

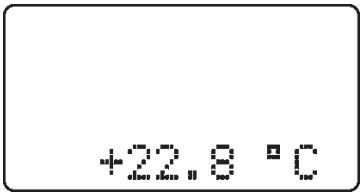

Icon Area

The icon area contains display icons that assist the user in setup and indicate important states of system functions. The *CAL, CONFIG, CNTRL* and *DIAG* icons are used to tell the user what branch of the software tree the user is in while scrolling through the menu items. This improves software map navigation dramatically. Upon entry into a menu, the title is displayed (such as *CAL*) and then the title disappears to make way for the actual menu item. However, the icon stays on.

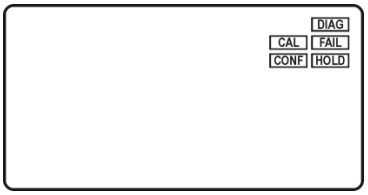

HOLD

The *HOLD* icon indicates that the current output of the transmitter has been put into output hold. In this case, the output is locked to the last input value measured when the *HOLD* function was entered. *HOLD* values are retained even if the unit power is cycled.

FAIL

The *FAIL* icon indicates that the system diagnostic function has detected a problem that requires immediate attention. This icon is automatically cleared once the problem has been resolved.

Software

The software of the Q45C4 is organized in an easy to follow the menu-based system. All user settings are organized under five menu sections: *Measure, Calibration [CAL], Configuration [CONFIG], Control [CONTROL]* and *Diagnostics [DIAG]*.

NOTE: The default *Measure* menu is display-only and has no menu icon.

Software Navigation

Within the *CAL, CONFIG, CONTROL* and *DIAG* menu sections is a list of selectable items. Once a menu section (such as *CONFIG*) has been selected with the MENU key, the user can access the item list in this section by pressing either the **ENTER** key or the **UP** arrow key. The list items can then be scrolled through using the **UP** arrow key. Once the last item is reached, the list wraps around and the first list item is shown again. The items in the menu sections are organized such that more frequently used functions are first, while more permanent function settings are later in the list. See *Figure 20 on page 29* for a visual description of the software.

Each list item allows a change to a stored system variable. List items are designed in one of two forms: simple single variable, or multiple variable sequences. In the single variable format, the user can quickly modify one parameter. For example, changing temperature display units from °F to °C. In the multiple variable sequence, variables are changed as the result of some process. For example, the calibration of conductivity generally requires more than one piece of information to be entered. The majority of the menu items in the software consist of the single variable format type.

Any data that may be changed flashes. This flashing indicates *User Entry* mode and is initiated by pressing the **ENTER** key. The **UP** arrow key increases a flashing digit from 0…9. The **LEFT** arrow key moves the flashing digit from right to left. Once the change has been completed, pressing **ENTER** again stores the variable and stops the flashing. Pressing **ESC** aborts the change and also exits *User Entry* mode.

The starting (default) screen is always the *Measure* menu. The **UP** arrow key is used to select the desired display. From anywhere in this section the user can press the **MENU** key to select one of the four menu sections.

The **UP** arrow icon next to all list items on the display is a reminder to scroll through the list using the **UP** arrow key.

To select a list item for modification, first select the proper menu with the **MENU** key. Scroll to the list item with the **UP** arrow key and then press the **ENTER** key. This tells the system that the user wishes to perform a change on that item. For single item type screens, once the user presses the **ENTER** key, part or all of the variable begins to flash, indicating that the user may modify that variable using the arrow keys. However, if the instrument is locked, the transmitter displays the message "Locked!" and does not enter *User Entry* mode. The instrument must be unlocked by entering the proper code value to allow authorized changes to user entered values. Once the variable has been reset, pressing the **ENTER** key again causes the change to be stored and the flashing to stop. The message "Accepted!" displays if the change is within pre-defined variable limits. If the user decides not to modify the value after it has already been partially changed, pressing the **ESC** key aborts the modification and returns the entry to its original stored value.

In a menu item which is a multiple variable sequence type, once the **ENTER** key is pressed there may be several prompts and sequences that are run to complete the modification. The **ESC** key can always be used to abort the sequence without changing any stored variables.

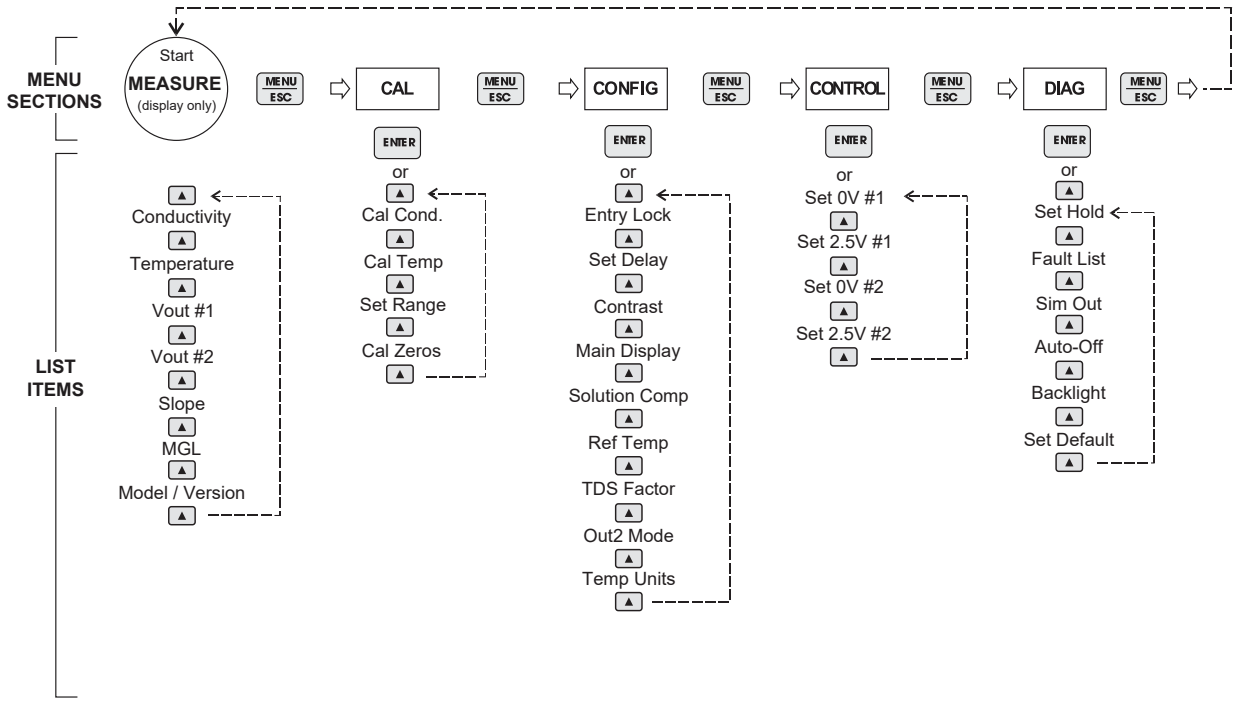

Figure 20: Software map

Measure Menu [MEASURE]

The default menu for the system is the display-only menu *MEASURE*. This menu is a display-only measurement menu and has no changeable list items. When left alone, the instrument automatically returns to this menu after approximately 30 minutes. While in the default menu, the **UP** arrow allows the user to scroll through the secondary variables on the lower line of the display. A brief description of the fields in the basic transmitter version is as follows:

Transmitter Measure Screens

25.7° C	Temperature display. Can be displayed in °C or °F, depending on user selection. A small "m" on the left side of the screen indicates the transmitter has automatically jumped to a manual 25° C setting due to a failure with the temperature signal input.
#1 0.00V DC	Instrument output signal #1.
#2 1.25V DC	Instrument output signal #2.
Slope = 100%	Sensor output response vs. ideal calibration. This value updates after each calibration. As the sensor ages, the slope reading decays indicating sensor aging. Useful for resolving sensor problems.
TDS = 200 ppm	Total Dissolved Solids (TDS). Displays TDS of process.
Q45C4 v4.00	Transmitter software version number.

NOTE: A display test (all segments ON) can be actuated by pressing and holding the **ENTER** key while viewing the model/version number on the lower line of the display.

The *MEASURE* screens are intended to be used as a very quick means of looking up critical values during operation or troubleshooting.

Calibration Menu [CAL]

The *Calibration* menu contains items for frequent calibration of user parameters. There are four items in this list: *Cal Cond, Cal Temp, Set Range* and *Cal Zeros*.

Cal Cond	The conductivity calibration function allows the user to adjust the transmitter offset and span reading to match reference buffers, or to adjust the sensor offset to match the sample reading. See *"Calibration" on page 34* for more details.
Cal Temp	The temperature calibration function allows the user to adjust the offset of the temperature response by a small factor of ±5° C. The temperature input is factory calibrated to very high accuracy. However, long cable lengths and junction boxes may degrade the accuracy of the temperature measurement in some extreme situations. Therefore, this feature is provided as an adjustment. See *"Calibration" on page 34* for more details.
Set Range	This function allows the user to set the display range of the transmitter for a specific application. Once set, all output functions use this display range to establish configuration settings. Press **ENTER** to initiate *User Entry* mode, and the value flashes. Use the arrow keys to modify the range for the desired range and then press **ENTER**.
Cal Zeros	This function calibrates all range zero points to the specific sensor being used. This function is only required to be performed once at initial startup or when the sensor has been replaced. See *"Calibration" on page 34* for more details.

Configuration Menu [CONFIG]

The *Configuration* menu contains all of the general user settings:

Entry Lock This function allows the user to lock out unauthorized tampering with instrument settings. All settings may be viewed while the instrument is locked, but they cannot be modified. The *Entry Lock* feature is a toggle-type setting. That is, entering the correct code locks the transmitter and entering the correct code again unlocks it. The code is preset at a fixed value. Press **ENTER** to initiate *User Entry* mode and the first digit flashes. Use arrow keys to modify value. See *page 41* for the Q45C4 lock/unlock code. Press **ENTER** to toggle lock setting once code is correct. Incorrect codes do not change state of lock condition.

Set Delay The delay function sets the amount of damping on the instrument. This function allows the user to apply a first order time delay function to the conductivity measurements being made. Both the display and the output value are affected by the degree of damping. Functions such as calibration are not affected by this parameter. The calibration routines contain their own filtering and stability monitoring functions to minimize the calibration timing. Press **ENTER** to initiate *User Entry* mode and the value flashes. Use the arrow keys to modify value. Range is 0.1…9.9 minutes. Press **ENTER** to store the new value.

Contrast This function sets the contrast level for the display. The custom display is designed with a wide temperature range, Super-Twist Nematic (STN) fluid.

The STN display provides the highest possible contrast and widest viewing angle under all conditions. Contrast control of this type of display is generally not necessary, so contrast control is provided as a means for possible adjustment due to aging at extreme ranges. In addition, the display has an automatic temperature compensation network. Press **ENTER** to initiate *User Entry* mode and the value flashes. Use arrow keys to modify the value. Range is 0…8 (0 being lightest). Press **ENTER** to update and store the new value.

Main Units This function allows the user to change the measurement in the primary display area. The user may select between conductivity, sensor temperature or output current. Using this function, the user may choose to put temperature in the main display area and conductivity on the secondary, lower line of the display. Press **ENTER** to initiate *User Entry* mode and the entire value flashes. Use the **UP** arrow key to modify the desired display value. Press **ENTER** to store the new value.

Solu Comp This function sets the correction slope value for the linear temperature compensation method and is used when the *Temp Mode* is set to **Lin**. Linear compensation is the method recommended for most aqueous solutions and the value is typically 2.00%/°C (25° C reference temperature) for neutral water. This is the factory default and it provides the best compensation for most aqueous solutions. Other typical ranges include:

Acids: 1.0…1.6%/°C
Bases: 1.8…2.0%/°C
Salts: 2.2…3.0%/°C

NOTE: If the temperature units are changed between °C and °F (see *"Temp Units" on page 32*), the default setting for this output changes between 2.00%/°C…1.11%/°F accordingly.

Other compensation slopes for uncommon solutions may be found in chemical handbooks (such as the *CRC Handbook of Chemistry and Physics*). Press **ENTER** to initiate *User Entry* mode and the entire value flashes. Use the arrow keys to modify the desired value. Entry range is 0.000%/°C (no compensation)… 4.000%/°C. Press **ENTER** to store the new value.

Ref Temp The reference temperature function sets the basis point for the linear temperature compensation methods. In most cases this setting should be left at the default of 25.0° C.

Press **ENTER** to initiate *User Entry* mode and the entire value flashes. Use the arrow keys to modify the desired value. Range is 0.0° C…50.0° C. Press **ENTER** to update and store the new value. This setting appears in the *Software* menu only if *Temp Mode* is set to **Lin**.

TDS Factor This function sets the linear relationship of the TDS (total dissolved solids) reading to the conductivity measurement. The actual units for the slope are in mg/L/µS. The default value is 00.49 mg/L/µS.

Press **ENTER** to initiate *User Entry* mode and the entire value flashes. Use the arrow keys to modify the desired value. Range is 00.00 mg/L/µS…99.99 mg/L/µS. Press **ENTER** to update and store the new value.

Out 2 Mode This assigns output #2 to either µS (by selecting 1) or for temperature output (by selecting 2).

Temp Units This function sets the display units for temperature measurement. Press **ENTER** to initiate *User Entry* mode and the entire value flashes. Use the **UP** arrow key to modify the desired display value. The choices are **°F** and **°C**. Press **ENTER** to store the new value.

Control Menu [CONTROL]

The *Control* menu contains all of the output control user settings:

Set 0V #1
Set 2.5V #1
Set 0V #2
Set 2.5V #2

These functions set the output range for each of the two instrument outputs. The value stored for the 0V point may be higher or lower than the value stored for the 2.5V point.

The entry values are limited to values within the range selected in the *Set Range* parameter under the *CAL* menu and must be separated by at least 1% of this range. Use the **LEFT** arrow key to select the first digit to be modified. Then use the **UP** and **LEFT** arrow keys to select the desired numerical value. Press **ENTER** to store the new value.

Output #1 is always in units of ppm, as it is fixed to track conductivity. Output #2 is in either units of µS or °C/°F, depending on whether µS or temperature is set for Out#2 in the *CONFIG* menu.

NOTE: If the temperature units are changed between °C and °F (see *"Temp Units"*), the default settings for this output is stored (present data is not converted).

Diagnostics Menu [DIAG]

The *Diagnostics* menu contains all of the user settings that are specific to the system diagnostic functions, as well as functions that aid in troubleshooting application problems.

Set Hold The *Set Hold* function locks the current loop output values on the present process value and halts operation of the PID controller. This function can be used prior to calibration, or when removing the sensor from the process, to hold the output in a known state. Once *HOLD* is released, the outputs return to their normal state of following the process input. The transfer out of *HOLD* is bumpless on both analog outputs—that is, the transfer occurs in a smooth manner rather than as an abrupt change. An icon on the display indicates the *HOLD* state, and the *HOLD* state is retained even if power is cycled. Press **ENTER** to initiate *User Entry* mode, and the entire value flashes. Use the **UP** arrow key to modify the desired value. Selections are **ON** for engaging the *HOLD* function and **OFF** to disengage the function. Press **ENTER** to store the new value.

The *Set Hold* function can also hold at an output value specified by the user. To customize the hold value, first turn the *HOLD* function on. Press the **ESC** key to go to the *DIAG* menu and scroll to *Sim Output* using the **UP** arrow key. Press **ENTER**. Follow the instructions under *"Sim Out" on page 33*.

Fault List The *Fault List* screen is a read-only screen that allows the user to display the cause of the highest priority failure. The screen indicates the number of faults present in the system and a message detailing the highest priority fault present.

NOTE: Some faults can result in multiple displayed failures due to the high number of internal tests occurring. As faults are corrected, they are immediately cleared.

Faults are not stored. They are immediately removed if power is cycled. If the problem causing the faults still exists, however, faults display again after power is re-applied and a period of time elapses during which the diagnostic system re-detects them. The exception to this rule is the calibration failure. When a calibration fails, no corrupt data is stored. Therefore, the system continues to function normally on the data that was present before the calibration was attempted.

After 30 minutes, or if power to the transmitter is cycled, the failure for calibration clears until calibration is attempted again. If the problem still exists, the calibration failure reoccurs. Press **ENTER** to initiate view of the highest priority failure. The display automatically returns to normal after a few seconds.

Sim Out

The *Sim Out* function allows the user to simulate the µS level of the instrument in the user selected display range. The user enters a µS value directly onto the screen, and the output responds as if it were actually receiving the signal from the sensor. This allows the user to check the function of attached monitoring equipment during setup or troubleshooting. Escaping this screen returns the unit to normal operation. Press **ENTER** to initiate the *User Entry* mode and the right-most digit of the value flashes. Use arrow keys to modify desired value.

The starting display value is the last read value of the input. The output is under control of the *SIM* screen until the **ESC** key is pressed.

NOTE: If the *HOLD* function is engaged before the *Sim Output* function is engaged, the simulated output remains the same even when the **ESC** key is pressed. Disengage the *HOLD* function to return to normal output.

Auto-Off

The *Auto-Off* function enables the automatic shut-off feature for the instrument. If ON, the instrument automatically shuts off in 60 minutes after no keys are pressed to save power. With the external powered unit, this function should remain at **OFF**.

Back-Light

The *Back-Light* screen is used to set the operating conditions under which the backlight turns on. The default is *AUTO*, which configures the light to come on whenever any key is pressed. The light automatically shuts off if no key is pressed for 30 seconds. Other selections are OFF (always off), AL for Alarm, where the light comes on in alarm condition and flashes under a *FAIL* condition, and ON (always on).

Set Default

The *Set Default* function allows the user to return the instrument back to factory default data for all user settings or for just the calibration default. It is intended to be used as a last resort troubleshooting procedure. All user settings or the calibration settings are returned to the original factory values. Hidden factory calibration data remains unchanged. Press **ENTER** to initiate *User Entry* mode and the value *NO* flashes. Use the **UP** arrow key to modify value to *YES* and press **ENTER** to reload defaults.

CALIBRATION

Overview and Methods

Calibration of the Q45C4 is required to accurately match the sensor characteristics to the monitor/analyzer. Since the output of the conductivity sensor does not degrade over time, it is typically only required that the sensor be calibrated at initial installation and then cleaned periodically to maintain proper system accuracy.

It is important for the user to establish a periodic cleaning and calibration-check schedule for sensor maintenance to maintain high system accuracy. Since the conductivity of a solution is greatly affected by temperature, proper settings for thermal compensation are critical for accurate operation. Before calibrating the instrument for the very first time, it is important to select the proper operating parameters in the *Configuration* menus for temperature compensation methods. Also at initial installation, a temperature calibration must be performed before conductivity can be calibrated.

When using conductivity calibration standards for a wet calibration, take care not to inadvertently contaminate the reference solution. Always thoroughly clean the sensor, rinsing off in tap water and then finish rinsing in pure or deionized water.

NOTE: Calibration solutions less than 200 µS or greater than 100 mS can be very unstable. Moving the sensor back and forth between different value conductivity reference solutions can quickly contaminate the solutions and render them inaccurate.

1-Point Calibration Explained

The 1-point calibration method is generally known as the "grab sample" calibration method. In the 1-point calibration method, the sensor may be removed from the application and placed into a reference solution. It may also be left in the measurement process and calibrated by reference. The 1-point calibration adjusts the sensor slope to match the exact calibration point. Readings beyond that point are then extrapolated from the determined slope of the calibration line. Since the sensor slope does not degrade over time, frequent re-calibration is unnecessary. Calibration accuracy can be optimized by calibrating with a reference solution that is close to the values typically measured.

Zero Cal Calibration Explained

The sensor offset must be set for the system only on initial sensor installation or when the cable length has been altered. The Zero Cal method establishes all of the sensor offset points for the instrument's six ranges of operation.

Performing a Sensor Zero Calibration

The sensor offset **MUST** be set for the system on initial sensor installation or when the cable length has been altered. However, it can easily be adjusted at any time by re-calibrating the sensor in air. The sensor zero calibration generally has little effect in measurements above about 50 mS, but it can have a significant effect in measurements below about 1 mS. If the sensor zero cal is to be performed, it must be done **BEFORE** the 1-point reference calibration.

To begin the sensor zero cal, verify that the sensor is connected, clean and dry. It should be placed in the air with the electrodes at least one foot away from any nearby objects. Holding it is not recommended. Place on a table or just hang.

Procedure

1. Remove sensor from process and clean thoroughly. Dry sensor and position on a table or hang in the air (in air is best.) If on a table, let end of sensor hang over the edge of the table.
2. Scroll to the *CAL* menu section using the **MENU** key and press **ENTER** or the **UP** arrow key. Scroll to the menu *Zero Cal*.
3. Press the **ENTER** key. The screen prompts the user to position the sensor in air.
4. Press the **ENTER** key. The screen automatically scrolls through all ranges and establishes and stores the proper zero points.

Performing a 1-Point Calibration

This calibration method is intended to be used as an online calibration method or a wet-cal with reference solutions. During calibration, the system displays the current conductivity reading, and the user can manually enter a reference value from a reference solution bottle or a comparative reference instrument.

For wet calibrations, the user may use pre-made calibration references (also available from Badger Meter) or a NaCl solution may be made using pure, dried NaCl crystals and one liter of high purity, deionized, CO_2-free water as mixed in the table shown in *"NaCl Reference Solution for Calibration (25° C)"* below. All table data is at 25° C. Therefore, the sensor must be at this temperature to calibrate properly using the table data. If another reference calibration solution is being used, be sure to note temperature of reference solution before calibration. Since the sensor must ideally be at the specified temperature, wet calibrations can be difficult to perform accurately.

NaCl Reference Solution for Calibration (25° C)

µS/cm	NaCl (gm)
100	0.05
200	0.10
500	0.25
1000	0.50
2000	1.01
3000	1.53
4000	2.06
5000	2.61
8000	4.34
10000	5.56
20000	11.59

During the 1-point calibration, the system automatically picks the correct range for the calibration reference if the Q45C4 is in the *AUTO* range (see *"1-Point Calibration Explained" on page 34*). If the Q45C4 is in a normal display mode, the user must be careful to calibrate with a solution that falls into the manual range selected. If the calibration solution is outside the manual range, an error results.

Procedure

1. If a zero calibration on the sensor is also to be performed, that must be done **FIRST**. The zero calibration process can have an impact on the result of the 1-point calibration. So if a zero cal is required, do that procedure and return here.
2. Determine whether the calibration is done online or with the sensor removed and placed into a reference solution. If the sensor is removed from the application, rinse and clean.
3. If the sensor has been removed and placed into a solution, allow sensor to temperature equilibrate with the solution as much as possible. With the sensor coming from an application that differs greatly in temperature, the user may have to wait as much as 20 minutes. If the sensor is online, the user may want to set the output *HOLD* feature prior to calibration to lock out any output fluctuations.
4. Scroll to the *CAL* menu section using the **MENU** key and press **ENTER** or the **UP** arrow key. Scroll until "Cal Cond" is displayed. Press **ENTER**.
5. The screen prompts the user to place the sensor into the reference solution (ideally this has already been done to achieve temperature equilibrium.) Once sensor is ready, press **ENTER**.
6. The system now begins acquiring data for the calibration value. As data is gathered, the units for conductivity and temperature may flash. Flashing units indicate that this parameter is unstable. The calibration data point acquisition stops only when the data remains stable for a pre-determined amount of time. This can be overridden by pressing **ENTER**. If the data remains unstable for 10 minutes, the calibration fails and the message "Cal Unstable" displays.
7. The screen displays the last measured conductivity value and a message displays prompting the user for the reference value. The user must then modify the screen value with the arrow keys and press **ENTER**. The system then performs the proper checks.
8. If accepted, the screen displays the message "PASS" with the slope value. Then it returns to the main measurement display. If the calibration fails, a message indicating the cause of the failure displays and the *FAIL* icon turns on.

Temperature Calibration

The temperature input is factory calibrated for the highest accuracy. Temperature calibration is not recommended, however, it is provided for applications in which very long cable lengths are needed. For example, at 50 feet, readings may be off ±0.2° C.

The temperature calibration sequence is essentially a 1-point offset calibration that allows adjustments of approximately ±5° C.

The sensor temperature may be calibrated on line, or the sensor can be removed from the process and placed into a known solution temperature reference. In any case, it is critical that the sensor be allowed to reach temperature equilibrium with the solution in order to provide the highest accuracy.

When moving the sensor between widely different temperature conditions, it may be necessary to allow the sensor to stabilize as much as one hour before the calibration sequence is initiated. If the sensor is online, the user may want to set the output *HOLD* (see *"Control Menu [CONTROL]" on page 32*) feature prior to calibration to lock out any output fluctuations.

Procedure

1. Scroll to the *CAL* menu section using the **MENU** key and press **ENTER** or the **UP** arrow key.
2. Press the **UP** arrow key until "Cal Temp" is displayed.
3. Press the **ENTER** key. The message "Place sensor in solution then press ENTER" displays. Move the sensor into the calibration reference (if it has not been moved already) and wait for temperature equilibrium to be achieved. Press **ENTER** to begin the calibration sequence.

   The calibration data gathering process begins. The message "Wait" flashes as data is accumulated and analyzed. The "°C" or "°F" symbol may flash periodically if the reading is too unstable.
4. The message "Adjust temp value then press ENTER" displays, and the rightmost digit begins to flash, indicating that the value can be modified. Using the **UP** and **LEFT** arrow keys, modify the value to the known ref solution temperature. Adjustments up to ±5° C from the factory calibrated temperature are allowed. Press **ENTER**.
5. Once completed, the display indicates "PASS" or "FAIL." If the unit fails, the temperature adjustment may be out of range, the sensor may not have achieved complete temperature equilibrium, or there may be a problem with the temperature element. In the event of calibration failure, it is recommended to attempt the calibration again immediately.

SYSTEM MAINTENANCE

System Checks

1. If the "FAIL" icon is flashing on the display, check the *Fault List* to determine the cause of the failure. To access the *Fault List*, press the **MENU/ESC** key until the *DIAG* menu appears. Then press the **UP** arrow key until the *Fault List* appears. Press the **ENTER** key to access the *Fault List*, and the highest priority fault message displays. For a list of all messages and possible causes/solutions, see *"Display Messages" on page 39*.
2. In **ALL** environments, connect an earth ground jumper to earth terminal connection on transmitter.
3. Perform a 1-point calibration prior to sensor installation.
4. Check sensor cable color to terminal strip markings.
5. For highly unstable behavior, remove sensor from the process and measure the process solution in a plastic beaker. If the reading now stabilizes, place wire in beaker solution and actual process solution to determine if a ground loop exists.

Instrument Checks

1. Remove sensor completely and connect 1100 Ohms from the yellow to black sensor input leads. Make sure the unit is configured for a Pt1000 thermal element and that the temperature is not in manual locked mode. The temperature reading should display approximately 25° C and the conductivity reading should display approximately 0.0 µS.
2. With a DMM, measure the DC voltage from the white sensor lead connection to the black sensor lead connection. With the positive DMM lead on the white wire, the meter should read between –4.5…–5.5V DC.
3. For the line powered version, verify the proper line voltage power. With power disconnected, verify continuity across the line fuse.
4. For the DC transmitter variation, verify that power supply has required voltage based on size of resistance in current loop. Large resistive loads can reduce available power for transmitter.

NOTE: See sensor manual for specific sensor tests to be performed.

Cleaning the Sensor

Keep the sensor as clean as possible for optimum measurement accuracy. Frequency of cleaning depends upon the process solution.

Wipe the measuring end of the sensor with a fine abrasive cloth (that is, ScotchBrite or equivalent). Then rinse with clean water (distilled or deionized, if possible). This should remove most contaminate buildup.

If necessary, soak the sensor for several minutes in a mild soap solution. Use a small, extra-soft bristle brush (such as a mushroom brush) to thoroughly clean the electrode surfaces. If surface deposits are not completely removed after performing this step, a dilute acid may be used to dissolve the deposits. Soak for a few minutes, and then rinse the sensor thoroughly with clean water (distilled or deionized, if possible).

NOTE: DO NOT soak the sensor in dilute acid solution for more than 5 minutes.

⚠ WARNING

ACIDS ARE HAZARDOUS. ALWAYS WEAR EYE AND SKIN PROTECTION WHEN HANDLING. FOLLOW ALL MATERIAL SAFETY DATA SHEET RECOMMENDATIONS. A HAZARDOUS CHEMICAL REACTION CAN BE CREATED WHEN CERTAIN ACIDS COME IN CONTACT WITH PROCESS CHEMICALS. MAKE THIS DETERMINATION BEFORE CLEANING WITH ANY ACID, REGARDLESS OF CONCENTRATION. DO NOT USE HYDROCHLORIC ACID ON ANY STAINLESS STEEL PORTION OF THE SENSOR.

After cleaning the sensor, check measurement and recalibrate the sensor.

Troubleshooting

The first step in resolving any measurement problem is to determine whether the trouble lies in the sensor or the transmitter. Since measurement problems can often be traced to foulants coating the electrodes, cleaning the sensor using the method outlined in *"Cleaning the Sensor" on page 37* should always be the first step in any troubleshooting.

If the sensor cannot be calibrated after cleaning, perform the following test. A multimeter is needed.

1. Disconnect the sensor from the transmitter or junction box.
2. Using a multimeter, verify continuity between electrodes indicated below and the corresponding wire colors in the cable (red, blue, green and white, only).

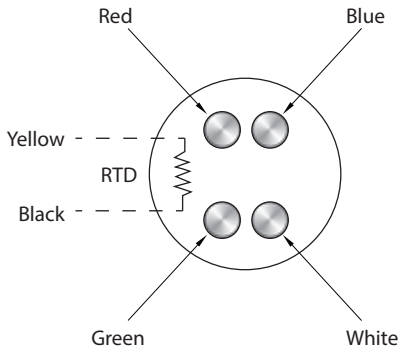

Figure 21: Sensor face

3. Verify that the sensor's temperature element (Pt1000 RTD) is functioning properly by measuring the resistance between the sensor's yellow and black wires. The nominal resistance value at 25° C is 1097 Ohms. Use the following table as a guide to the approximate resistance value:

°C	RTD Ω
20	1078
25	1097
30	1117
35	1136

Display Messages

The Q45 Series instruments provide a number of diagnostic messages that indicate problems during normal operation and calibration. These messages appear as prompts on the secondary line of the display or as items on the *Fault List*.

The following messages appear as prompts:

Message	Description	Possible Correction
Max is 200	Entry failed. Maximum value allowed is 200.	Reduce value to ≤ 200.
Min is 20	Entry failed. Minimum value allowed is 20.	Increase value to ≥ 20.
Cal Unstable	Calibration problem. Data too unstable to calibrate.	Clean sensor, get fresh cal solutions, allow temperature and conductivity readings to fully stabilize, do not handle sensor or cable during calibration.
Slope HIGH	Sensor slope from calibration is greater than 110%.	Get fresh cal solutions, allow temperature and conductivity readings to fully stabilize, check for correct buffer values.
Slope LOW	Sensor slope from calibration is less than 80%.	Clean sensor, get fresh cal solutions, allow temperature and conductivity readings to fully stabilize, check for correct buffer values.
Offset HIGH	Sensor offset from calibration is less than –90 mV or greater than +90 mV.	Clean or replace saltbridge, replace reference cell solution, clean sensor, get fresh cal solutions, allow temperature and conductivity readings to fully stabilize, check for correct buffer values.
Out of Range	Input value is outside selected range of the specific list item being configured.	Check manual for limits of the function to be configured.
Locked!	Transmitter security setting is locked.	Enter security code to allow modifications to settings.
Unlocked!	Transmitter security has just been unlocked.	Displayed just after security code has been entered.
TC-F25 lock!	The TC selection is in F25 mode, locked at 25° C.	Calibration and TC adjustment cannot be performed while the TC is in F25 mode. To allow access to TC calibrations, change TC mode from F25 (fixed 25) to SENS (sensor).

The following messages appear as items on the *Fault List*:

Message	Description	Possible Correction
Sensor High	The raw signal from the sensor is too high.	Check wiring connections to sensor.
Sensor Low	The raw signal from the sensor is too low.	Check wiring connections to sensor.
Cond Too High	The conductivity reading is > 2000 mS.	The conductivity reading is over operating limits.
Temp High	The temperature reading is > 210° C.	The temperature reading is over operating limits. Check wiring and expected temp level. Perform RTD test as described in sensor manual. Recalibrate sensor temperature element if necessary.
Temp Low	The temperature reading is < –10° C.	The temperature reading is under operating limits. Check wiring and expected temp level. Perform RTD test as described in sensor manual. Recalibrate sensor temperature element if necessary.
TC Error	TC may be open or shorted.	Check sensor wiring and perform RTD test as described in sensor manual.
Clean Sensor	Foulants on sensor have reached the level that they cannot be adjusted out.	Clean the sensor thoroughly.
Cond Cal Fail	Failure of conductivity calibration.	Clean sensor, get fresh cal solutions and redo calibration. If still failure, sensor slope may be less than 50%. Perform sensor tests as described in sensor manual. Replace sensor if still failure.
TC Cal Fail	Failure of temperature calibration.	Clean sensor, check cal solution temperature and repeat sensor temp calibration. TC calibration function only allows adjustments of +/–6° C. If still failure, perform sensor tests as described in sensor manual. Replace sensor if still failure. **NOTE:** TC offset may also be adjusted using the *Cal TC Factor* function (see *"Calibration Menu [CAL]" on page 30*) which involves no calibration reference solutions.
EEprom Fail	Internal non-volatile memory failure.	System failure. Consult factory.
Chcksum Fail	Internal software storage error.	System failure. Consult factory.
Display Fail	Internal display driver fail.	System failure. Consult factory.-
Range Cal Fail	Failure of factory temperature calibration.	Consult factory.

SPARE PARTS

Part No.	Description
Spare Electronics	
*	Transmitter Assy, External Power, 5…17V DC
03-0335	Q45C4 Front Lid Assy
03-0361	External Power PCB Assembly
Spare Sensors	
00-1526	Flow Type, Noryl Body with Connector
07-0055	Convertible, PEEK Body, 15 ft
07-0067	Convertible, PEEK Body, 30 ft
07-0090	Convertible, PEEK Body with Connector
07-0083	Insertion, 316 SS Body, 15 ft
07-0098	Sanitary Style, 1-1/2 in., 316 SS Body, 15 ft
07-0068	Sanitary Style, 2 in., 316 SS Body, 15 ft
07-0423	Insertion, 316 SS Body, 30 ft
07-0424	Sanitary Style, 1-1/2 in., 316 SS Body, 30 ft
07-0425	Sanitary Style, 2 in., 316 SS Body, 30 ft
Spare Flowcells	
00-1522	Sealed Flowcell Assy
05-0110	Sealed Flowcell Vacuum Breaker
07-0209	1 in. Flow Tee
Spare Sensor Components	
09-0046	Conductivity Standard – 84 microSiemens, 500 mL
09-0047	Conductivity Standard – 447 microSiemens, 500 mL
09-0048	Conductivity Standard – 1,500 microSiemens, 500 mL
09-0049	Conductivity Standard – 8,974 microSiemens, 500 mL
09-0050	Conductivity Standard – 80,000 microSiemens, 500 mL
Misc Components	
07-0100	Junction Box
03-0029	Sensor Cable with Connector, 25 ft
31-0057	Sensor Interconnect Cable

* Please consult factory for electronic assembly part number.

Lock/Unlock Code: 1453

INTENTIONAL BLANK PAGE

INTENTIONAL BLANK PAGE

Trademarks appearing in this document are the property of their respective entities. Due to continuous research, product improvements and enhancements, Badger Meter reserves the right to change product or system specifications without notice, except to the extent an outstanding contractual obligation exists. © 2024 Badger Meter, Inc. All rights reserved.