Oval Gear
Automotive Oval Gear Flow Meters

LM OG-AM series

Oval gear meters with MID approved register and integrated datalogger

LM OG-AM

LM OG-TAERM

LM OG-CNDAM

Badger Meter

AUT-UM-03452-EN-01 (March 2021)

User Manual

CONTENT

1. Disclaimer 1
2. Basic safety recommendations 1
3. Before putting into operation 2
3.1 Recommended filter sizes 3
4. Details of unit operation LM OG-AM series 4
4.1 RESET button 4
4.2 Datalogger: A non-volatile memory 4
4.3 Battery 4
4.4 Interruption of batch process 4
4.5 Functional control 4
4.6 Totalizer 5
4.7 Monitoring of false pulses for MID conform meters 5
4.8 Installation procedure LM OG 5
5. Programming of LM OG-AM and LM OG-TAERM series 6
6. Calculating the correction factor 7
6.1 Calculation based default settings 7
6.2 Recalculation of an existing correction factor 7
7. Pulse output at register OG-TAERM 7
8. Browse and program data logger 8
8.1 Search for a dispense 8
8.2 Programming the datalogger 9
9. Display correction factor 9
10. Checksum & serial number 10
11. Status messages 10
12. Changing the battery 10

1. DISCLAIMER

The user/purchaser is expected to read and understand the information provided in this manual, follow any listed safety precautions and instructions and keep this manual with the equipment for future reference. The information in this manual has been carefully checked and is believed to be entirely reliable and consistent with the product described. However, no responsibility is assumed for inaccuracies, nor does Badger Meter assume any liability arising out of the application and use of the equipment described. Should the equipment be used in a manner not specified by Badger Meter, the protection provided by the equipment may be impaired and the warranty voided. The meter is conform to the MID regulations for liquids other than water.

2. BASIC SAFETY RECOMMENDATIONS

Before installing or using this product, please read this instruction manual thoroughly. Only qualified personnel should install and/or repair this product. If a fault appears, contact your distributor.

Installation

Do not place any unit on an unstable surface that may allow it to fall.
Never place the units above a radiator or heating unit.
Route all cabling away from potential hazards.
Isolate from the mains before removing any covers.

Power connection

Use only the type of power source suitable for electronic equipment. If in doubt, contact your distributor. Ensure that any power cables are of a sufficiently high current rating. All units must be earthed to eliminate risk of electric shock. Failure to properly earth a unit may cause damage to that unit or data stored within it.

Protection class

Following devices have protection class IP65:

LM OG-AM	Standard inline meter
LM OG-KAM	Coated standard inline meter
LM OG-CDAM	Pistol meter with handle, sightglas and swivel
LM OG-CNDAM	Pistol meter with handle, sightglas, swivel and outlet
LM OG-TAERM	Inline meter with pulse output
LM OG-TAERKM	Coated inline meter with pulse output

All devices have to be protected against dripping water, water, oils, etc.

Setup & operation

Adjust only those controls that are covered by the operating instructions. Improper adjustment of other controls may result in damage, incorrect operation or loss of data.

Cleaning

Switch off all units and isolate from mains before cleaning.
Clean using a damp cloth. Do not use liquid or aerosol cleaners.

Repair of faults

Disconnect all units from power supply and have it repaired by a qualified service person if any of the following occurs:

WARNING

Failure to adhere to these safety instructions may result in damage to the product or serious bodily injury.

RoHs

Our products are RoHs compliant.

Battery disposal

The batteries contained in our products need to be disposed of as per your local legislation acc. to EU directive 2006/66/EG.

3. BEFORE PUTTING INTO OPERATION

Please check that the technical data of the installation match with those of the lube meter, for example connections, pressure, flow range and medium. Once the meter has been installed, please make sure that **no air, pressure shocks or particles** can damage the meter.

Read the following information and have a thorough understanding before proceeding with meter installation. Only qualified personnel should perform meter installation.

- Install a strainer or Y or basket as close to the inlet side of the meter as possible. Strainers prevent dirt and other fluid contaminants from impeding meter performance. Strainers require periodic cleaning, as clogged strainers also impede meter performance. Contact your local representative for specific information, per your specific application.

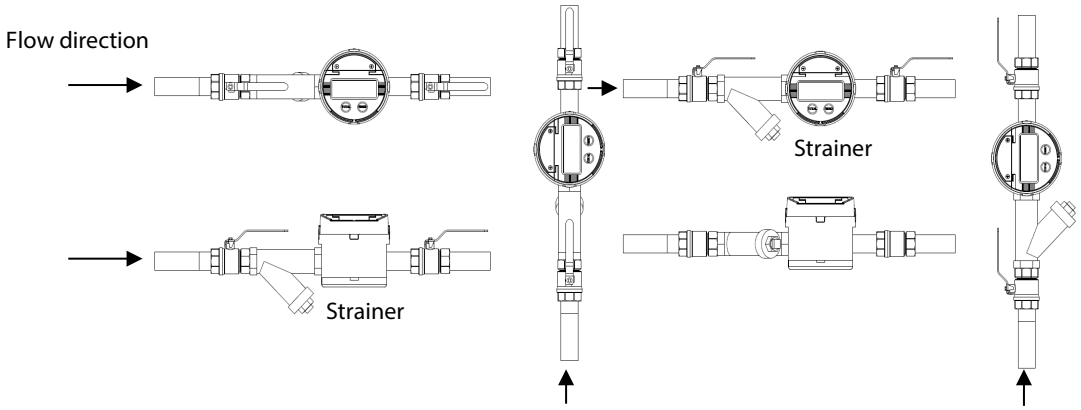

Figure 1: Meter installation

- Turn off any associated pumps to reduce line pressure and slowly fill the line and meter with fluid before restarting pumps. Doing so reduces the possibility of meter damage caused by errant air pressures in the line and meter.
- Make sure all pipe conforms to the same pressure output rating as the pump.
- Make sure to apply thread sealant to all pipe threads.
- Make sure to install the meter as shown in figure 1.
- Check for and repair leaks upon initialization of fluid flow.

3.1 Recommended filter sizes

	Filter / Pore size (in mesh)	**Filter / Pore size (in mm)**
½"	60	0,250

Please check all connections to leakage. After the installation we recommend to perform several transactions into an approved piston. Should the use of different oil viscosities show discrepancies by the error limit, it can be immediately corrected at the site. The pretested meters can be calibrated by technicians or the officials of the national authorities (MID).

4. DETAILS OF UNIT OPERATION LM OG-AM SERIES

4.1 RESET button

The display of the resettable totalizer (batch register) can be put to zero by pushing the **RESET** button. A **RESET** is not possible during a batch process. The **RESET** of the non-resettable totalizer is only possible in the MID secured area of the register configuration. Each **RESET** will save the dispensed quantity in the datalogger, but only if the quantity is equal or bigger than 0,5 liters.

4.2 Datalogger: A non-volatile memory

The register is fitted with a memory device to store measurement results until their use or to keep a record of commercial transactions, providing proof in the event of a dispute. Devices used to read stored information are considered as included in the memory devices. It is not required that the parties interested in a transaction shall be provided continuously with the results of measurement, but only that they shall have access to these results (for example, in the event of a dispute). In addition, in the case of self-service (filling station, truck filling station) the owner of the measuring system is considered to have access to the indications of the measuring system even when he does not use this possibility in practice (OIML R117-1, Chapter 3.5).

4.3 Battery

As soon as the capacity of the battery is less than 10%, “LBat” is displayed on the electronic register. The battery should then be replaced within the next two months. The battery is exchangeable in all meters of the LM OG-AM and OG-TAERM series while opening the cover on the front of the register. No data are lost, they are securely saved in an EEPROM memory - except of the date and time. To keep the date and time settings, you have to **reinsert the battery within 30 minutes.** See also *chapter 13*.

4.4 Interruption of batch process

By releasing the meter trigger, the batch process is interrupted. When pulled again, the batch process will be continued at the very point where it was interrupted, unless the **RESET** button has been pushed in the meantime. The display will remain unchanged during the interruption. If the batch process is interrupted by external source – e.g. failure of a transfer pump – the procedure is the same.

4.5 Functional control

In normal operation, the register board totalizes flow in the lube meter by sensing reed switch actions. The batch display may be reset to zero by momentarily pressing the **RESET** button on the front panel. This action will set the batch accumulator to zero and cause the register to enter a self-test mode. For the self-test, it is necessary that the display is activated with all numerics set to “8” and all other indicators set to “on” for a period of 0,8 seconds. If flow or reed switch action takes place during the self-test period, the resultant pulses are processed as normal flow accumulations. This accumulation of flow can only be reset by pressing the **RESET** button.

During the self-test period, the meter will compare the double redundant storage of the correction factor, the unit of measure and direction of rotation. If one of the values do not correspond, the register will show a series of dashes (- - - -) and will become inoperative.

If flow sensing or reed switch action is present at any time and it is not preceded by a pressing of the **RESET** button, the flow accumulations will be added to the value already present in the batch accumulator.

4.6 Totalizer

The total dispense quantity is shown in the bottom line. The factory programmed correction factor results from accuracy testing of bare meter with the mounted electronic register: Pressing the TOTAL and the RESET button simultaneously for 3 seconds will show the programmed correction factor.

Resettable totalizer: 999,999 L (over thousand 9999,99 L)

Non resettable totalizer: 99999 L

As soon as volume signals come in, all keyboard commands will be ignored!

As soon as pulses are internally accumulated, the keypad is out of function!

4.7 Monitoring of false pulses for MID conform meters

During measurement, the microprocessor controls the phase position of both reed switches (30° to 150° phase shift).

Errors caused by incorrect phase sequence:

If more than two (2) phase errors are noted after a **RESET**, the LCD display is flashing (1 second interval). This type of error is resettable by depressing the **RESET** button.

If it is not possible to stop the flashing, there is another fault and the register has to be exchanged.

The flashing can e. g. also be caused by a short-time reverse flow when starting up the oil dispense system, or by an insufficiently areated oil pipe (pressure shocks). This can be prevented by installing an appropriate non-return valve.
FLDIR will indicate a reverse flow, quantity display will change to ---,--

REED will indicate a missing input channel, quantity display will change to ---,--

Errors in stored variables:
(i.e. correction factor, unit of measure, direction of rotation)

These errors are indicated by a series of dashes across the display and are not resettable. The register has to be removed from service.

4.8 Installation procedure LM OG

The meter series LM OG is equipped with BSP female threads. In order to obtain a leakage-free connection from the meter to the hose, the hose end must have an appropriate BSP male thread.

We recommend to proceed as follows before screwing in:

1) Clean both threads from fat.
2) Brush the male thread at the hose with liquid sealant (e.g. Eurolock 310100 or equivalent sealing of other manufacturers). Be careful that no sealing gets into the meter.
3) Screw both parts together. Do not overtighten the screw connection, otherwise the swivel of the meter could be damaged.
4) The instruction of the sealing manufacturer should be absolutely followed.
5) The meter mounting should only be carried out by authorized specialist staff.

The right selection of the components as well as the mounting in accordance with the regulations is in the responsibility of the user.

5. PROGRAMMING OF LM OG-AM AND LM OG-TAERM SERIES

The units of measure and the correction factor can be configured in the programming mode. A program button on the backside of the register will enable the mode, only accessible when the register has been removed from the meter. Removing the register from the meter will break the sealing. This seal has to be restamped by the national authorities (MID).

	01 Turn on the register by pressing the TOTAL button.
	02 By pressing the programming button on the backside of the register you will enter the programming mode.
	03 The measuring unit will flash and can be changed by pressing the RESET button (L, GAL, QT, PT). To move forward press the TOTAL button.
	03 Press “TOTAL” to change the k-factor. The number to be changed is flashing and can be modified with “RESET”. To change the next number, press “TOTAL”.
	04 The second number can now be changed. To move to the next number, press “TOTAL” again.
	05 The third number can now be changed. To move to the next number, press “TOTAL” again.
	06 The fourth number can now be changed. To move to the next number, press “TOTAL” again.

	07 The fifth number can now be changed. To move forward, press “TOTAL” again.
	08 The arrow for the flow direction flashes now. Use RESET to change or TOTAL to move forward.
	09 By pressing the programming button on the backside of the register you will quit the programming mode.
	10 The register went into the sleep mode.
	11 To wake up the register, press the RESET button.
	12 Press „RESET“ for 3 seconds and the register displays the checksum and serial number in the bottom line.

6. CALCULATING THE CORRECTION FACTOR

Two different ways are described below to eliminate the existing deviation of a meter.
The reference quantity ("quantity dispensed") should always be measured with an appropriate measuring device.

- Approved piston or bell prover
- Approved gravimetric method

6.1 Calculation based default settings

Example:
Quantity dispensed: 5,000 liters
Quantity displayed: 4,990 liters
Correction factor k: 4,990 / 5,000 = 0,9980

Viscosity 440 mPas
Factor k about 1,0000

6.2 Recalculation of an existing correction factor

Example:
Quantity dispensed: 5,000 liters
Quantity displayed: 5,015 liters
Correction factor k: 5,015 / 5,000 = 1,003

The existing correction factor would be for example: 0,9960
Calculation: 0,9960 x 1,003 = 0,9989
The new correction factor is 0,9989

7. PULSE OUTPUT AT REGISTER OG-TAERM

The pulse output on the LM OG-TAERM register has a rating of 2x100 PPL with a 90°-135° phase-shift. Any irregular use or malfunction will be indicated on the error channel with permanent signal on high. The correction factor will also correct the output signal.

Flow direction - Inlet Top to Bottom
Output channel 1 = green
Output channel 2 = white (Error channel)

Power supply
6–24 VDC = yellow
GND = brown

Flow direction - Inlet Bottom to Top
Output channel 1 = white (Error channel)
Output channel 2 = green

Wiring only for MDS2000 Management System	**Wiring for other Management System**
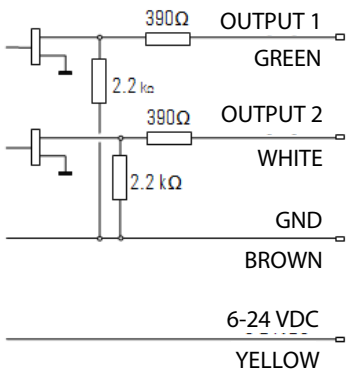 *MDS version included a meter detection*	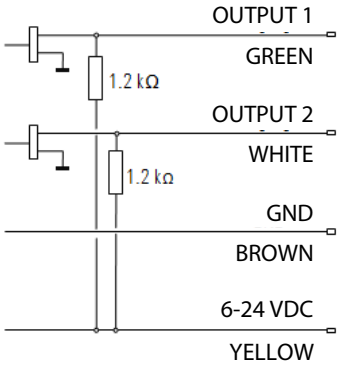

8. BROWSE AND PROGRAM DATA LOGGER

Pushing the **RESET** will automatically save the current dispense in the datalogger, if the quantity is bigger than 0,49 liters. The datalogger is capable to store 500 dispenses, any additional transaction will overwrite the oldest one without notice.

8.1 Search for a dispense

The sample below shows how to search for a dispense on a certain day. Known is the date and time of the dispense: 18.09.2012 15:46

Result: The dispensed quantity was 12,78 liters.

Sample content data logger

Date	Time	Qty	Batch
19.09.12	17:55	2,42	0081
19.09.12	16:23	4,42	0080
etc…			
18.09.12	17:23	4,53	0068
18.09.12	17:12	7,24	0067
18.09.12	15:46	12,78	0066
etc…			

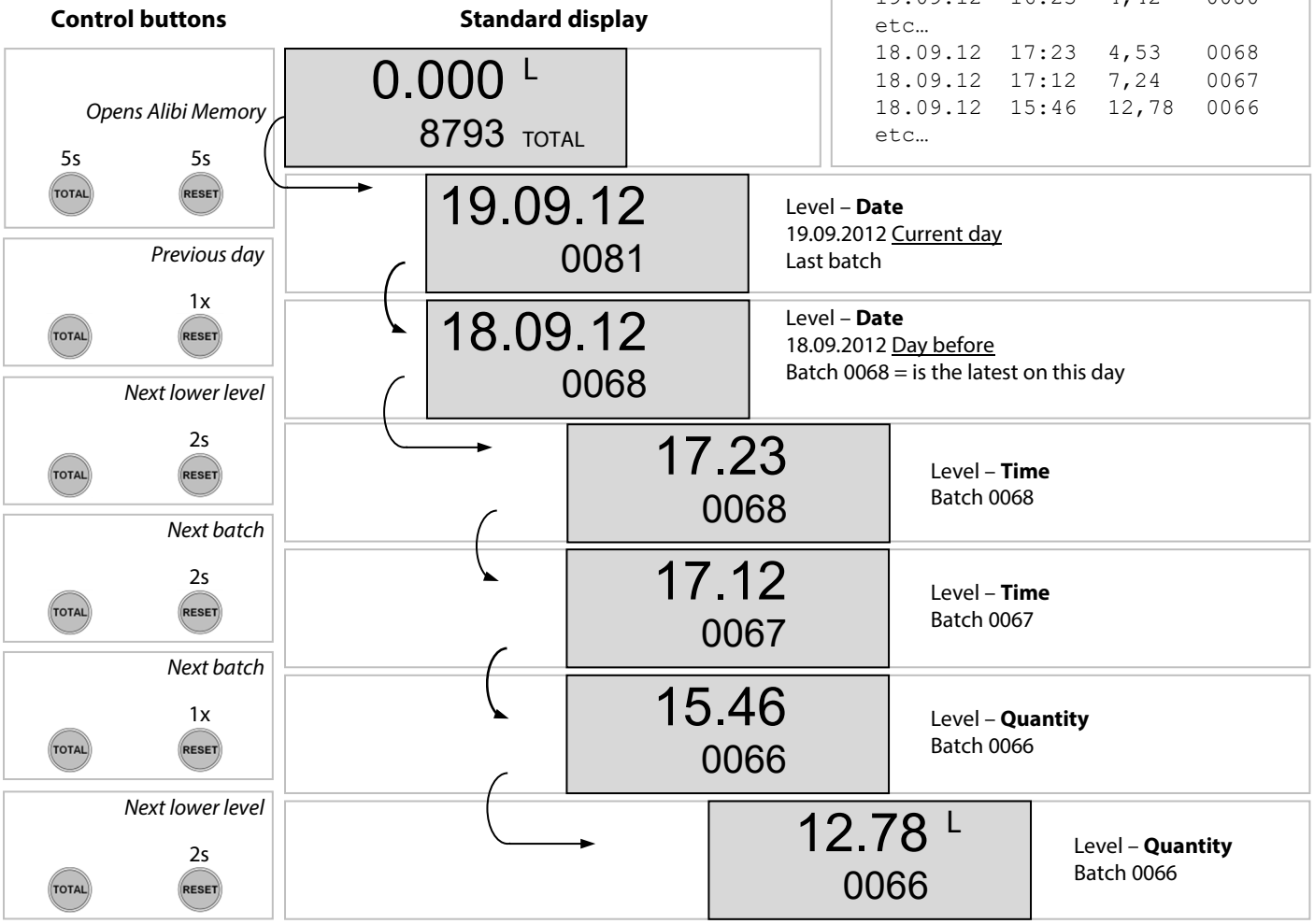

Pressing the **RESET** button once will bring you to the next older data entry, no matter if you are on the Date, Time or Quantity menu level. If you push the **RESET** twice and hold the button (within 1s), the data will scroll automatically.
Pressing the **RESET** for more than 2s will bring you to the next lower menu level.

Pressing the **TOTAL** button once will bring you to the next newer data entry, no matter if you are on the Date, Time or Quantity menu level. If you push the **TOTAL** twice and hold the button (within 1s), the data will scroll automatically.
Pressing the **TOTAL** for more than 2s will bring you to the next higher menu level.

8.2 Programming the datalogger

Below you will find the procedure to change time and date. The date can only be changed with the program button on the backside, which is only accessible when the register has been removed from the meter. Removing the register from the meter will break the sealing. This seal has to be restamped by the national authorities (MID).

The ERASE button removes all the logged dispenses; it does not affect time and date.

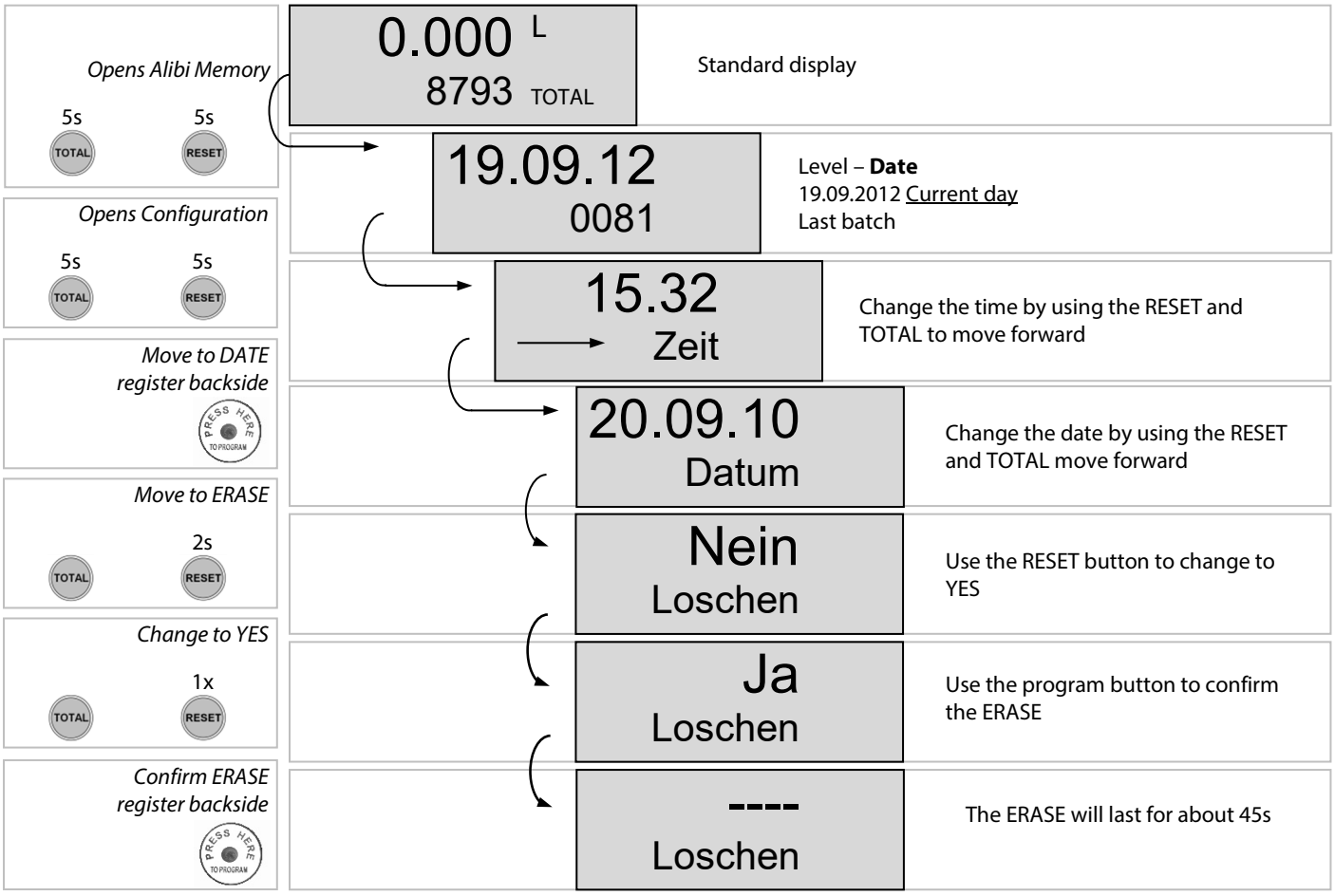

NOTE: *If no button has been pressed for more than 30 seconds, the register will automatically move back to the standard display without saving the last entry.*

9. DISPLAY CORRECTION FACTOR

To verify the programmed correction factor, press **TOTAL** and **RESET** for 2 seconds.

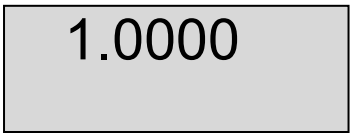

Correction factor

10. CHECKSUM & SERIAL NUMBER

Pressing **RESET** for 3 seconds will display the checksum and serial number in the bottom line.

3A33.07 L AC001 TOTAL	**Checksum**	3A33 07	= Checksum over the MID relevant source code = Sequential version number, not MID relevant
	Serial number	A AC001	= The year of production = Sequential alphanumeric number

11. STATUS MESSAGES

0.000 L Floir TOTAL	Wrong flow direction. Actual flow does not match with the programmed flow direction. FLDIR flashes in the bottom line, the quantity will change to dashes. See *chapter 6 - step 8*: Programming of LM OG-AM and LM OG-TAERM series.
-.--- L Reed TOTAL	Channel missing due to broken reed switch REED flashes in the bottom line, the quantity changes to dashes. Call service for replacement.
-.--- L Datum TOTAL	Lost date due to power failure, i.e. slow battery exchange. DATE flashes in the bottom line, meter will not count anymore until the date has been entered again. Quantity changes to dashes. See *chapter 13*: Changing the battery

12. CHANGING THE BATTERY

Important – Before starting the replacement:

The battery has to be replaced within 30 minutes, otherwise you will lose the date and time setting. The display would show "Date" in the bottom which indicates that the date is lost. The quantity display will change to dashes "- - - -". To reconfigure the date, you would have to remove the register, which is sealed by a MID label.

Please proceed as follows:

Picture 1: Loosen the battery cover	**Picture 2:** Take out the battery	**Picture 3:** Insert the new battery and press the reset button to wake up the register	**Picture 4:** Insert the battery cover, then screw the battery cover tight

Battery: Lithium CR123

Trademarks appearing in this document are the property of their respective entities. Due to continuous research, product improvements and enhancements, Badger Meter reserves the right to change product or system specifications without notice, except to the extent an outstanding contractual obligation exists. © 2021 Badger Meter, Inc. All rights reserved.