Preso®
Differential Pressure Flow Meters

Ellipse® Pitot Tube Meter

AHZ Annular Flanged Hot Tap Steam Meter

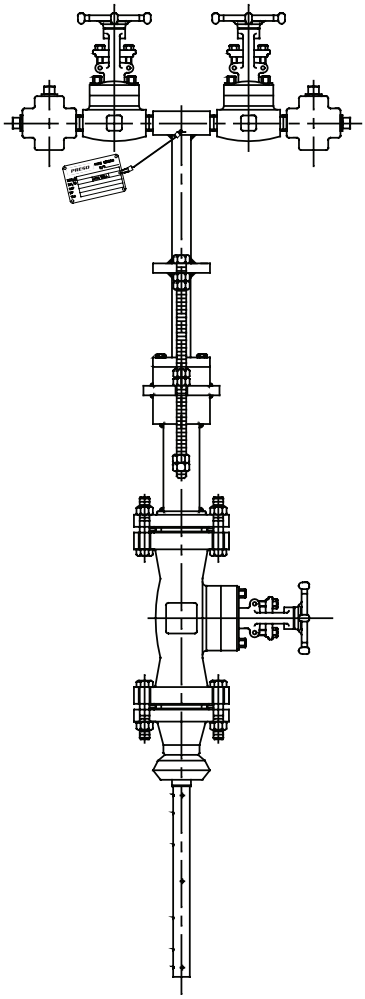

Badger Meter

PTT-UM-00514-EN-03 (August 2021)

User Manual

CONTENTS

Introduction. 3

Specifications 3

Pipe Orientation and Sensor Mounting 4

Installation Instructions, Single Support 4

Installation Instructions, Double Support 5

Typical Installation for AHZ Ellipse with Differential Pressure Transmitter 6

Location Instructions 7

Flow Curve 8

INTRODUCTION

The patented Preso elliptical design outperforms and provides greater accuracy than traditional differential pressure flow measurement devices. This differential pressure flow meter is designed with a series of ports facing the upstream velocity pressures, as well as flow sensing ports strategically located ahead of the trailing edge flow separation.

The multi-ported, self-averaging flow element consists of an elliptical shape with two independent flow sensing chambers. The impact velocity sensing holes (high pressure) are located along the leading edge and the true static sensing holes (low pressure) are on the exterior probe side. Model AHZ comes with instrument shutoff valves with provisions to accept a transmitter or direct indicating meter.

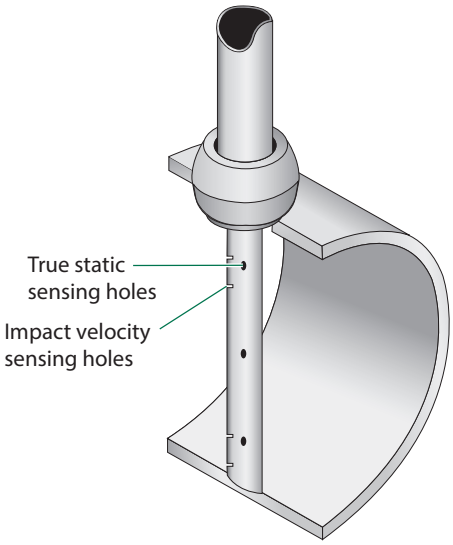

SPECIFICATIONS

Applications	Steam
Pipe Sizes	2…72 inches (50…1829 mm)
Pressure	800 psig (55 Bar) maximum
Temperature	800° F (425° C)
Accuracy	±0.75% of reading
Turndown Ratio	17:1 with no vacuum effect
Standard Components	T-type head, 316 SS 1/2 in. NPT connection CS compression fitting with SS ferrule CS 3000 lb weld fitting, ASTM A105 316/316L SS Ellipse sensor 316 SS ID tag with wire
Reynolds Number	Greater than 75,000 maintains most accurate flow measurements Less than 75,000 consult factory for estimated results
Resonance	If greater than 0.8, use double support per ASME PTC 19.3.

Table 1: AHZ specifications

PIPE ORIENTATION AND SENSOR MOUNTING

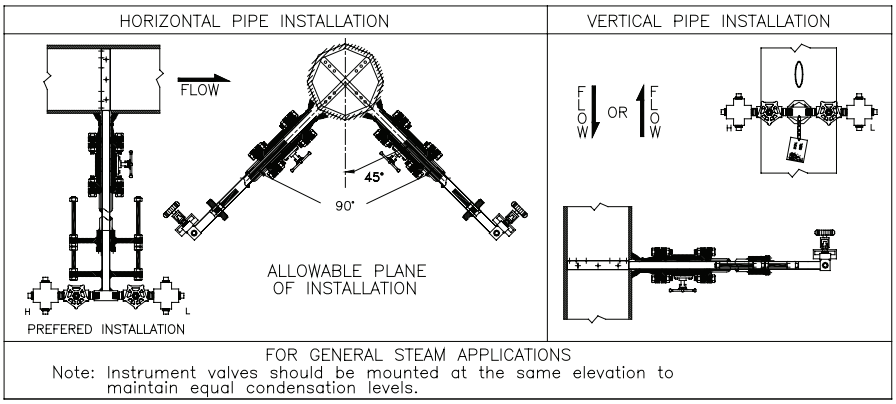

Figure 1: Pipe orientation

INSTALLATION INSTRUCTIONS, SINGLE SUPPORT

1. Choose the proper location to install the AHZ Ellipse using AGA/ASME standards (or equivalent). See *"Location Instructions" on page 7*.
2. Grind the surface of the pipe where the AHZ Ellipse is to be inserted to provide a clean area for welding.
3. Weld the mating flange assembly to the pipe. Align the holes as shown below. Allow a 1/16 in. weld gap between the mounting flange and the pipe.

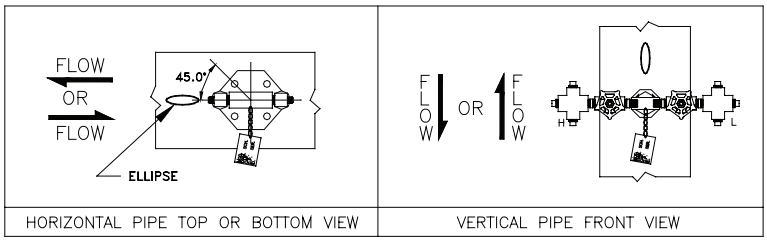

Figure 2: Horizontal and vertical mounting

4. Mount the flanged gate valve onto the mating flange assembly just welded in step 3.
5. Mount the high pressure drilling machine onto the gate valve. Open the gate valve. Drill a hole through the pipe wall according to *Table 2*.

Model / Sensor	Weld Connector	Drill Bit
AHZ (7/8 in.)	1-1/2 in.	1-1/8 in.
AHZ1 (1-1/4 in.)	2 in.	1-3/8 in.
AHZ2 (2-1/4 in.)	3 in.	2-1/2 in.

Table 2: Single support hole sizes

NOTE: There is no need for a drilling machine if it is not a hot tap installation or if the system is not pressurized.

6. Withdraw the drill bit through the isolating gate valve. CLOSE the gate valve and dismantle the drilling machine. Make sure there is no leakage at the valve and close nipple connections. The gate valve is to remain completely closed until step 9.
7. Install the flanged cage nipple, weldneck flange and packing gland with the threaded rods assembly by flanging it onto the isolating gate valve. Align the arrow on the sensor head with the direction of flow. See *Figure 3*.

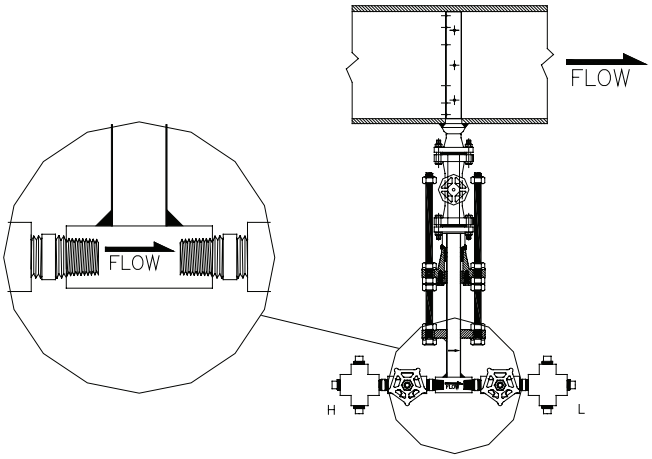

Figure 3: Sensor alignment

8. Install the instrument valves at the AHZ Ellipse head connections. Make sure the valves are fully closed to prevent them from leaking upon startup. Install the cross tees.
9. Open the isolating gate valve. Using a wrench, turn the threaded insertion rods clockwise into the pipe until the AHZ Ellipse sensor reaches the opposite pipe wall.
10. Connect the instrument lines to the senor head valves. Connect these lines to a gage or transmitter.
11. Verify that the instrument valves are FULLY CLOSED. Remove the 1/2 in. plugs from the top and side ports of the two forged cross tees.
12. Slowly pour water into the top ports of each forged cross tee until the system is full. Water will flow out of the side ports of both crosses.
13. Reinstall and secure the 1/2 in. plugs into the top and side ports. Then fully open the two gate valves.
14. Allow condensation levels to stabilize for 30 minutes before taking an instrument reading.

INSTALLATION INSTRUCTIONS, DOUBLE SUPPORT

NOTE: For non-hot tap installations only (system shutdown required).

1. Follow steps 1 through 7 in *"Installation Instructions, Single Support" on page 4*. At 180° from and on the same plane as the previously drilled hole, grind the surface of the pipe to provide a clean area for welding. Drill a hole and deburr, especially on the inside of the pipe. Size the hole used for the double support according to *Table 3*.

Model / Sensor	Weld Connector	Drill Bit
AHZ (7/8 in.)	1/2 in.	1/2 in.
AHZ1 (1-1/4 in.)	1 in.	7/8 in.
AHZ2 (2-1/4 in.)	3 in.	2-3/4 in.

Table 3: Double support hole sizes

2. Weld the double support weld-o-let making sure that it is centered with the drilled hole (1/16 in. weld gap recommended).
3. Install the AHZ Ellipse sensor through the two holes. Make sure that the double support pin passes through the guide ring. See *Figure 4*.

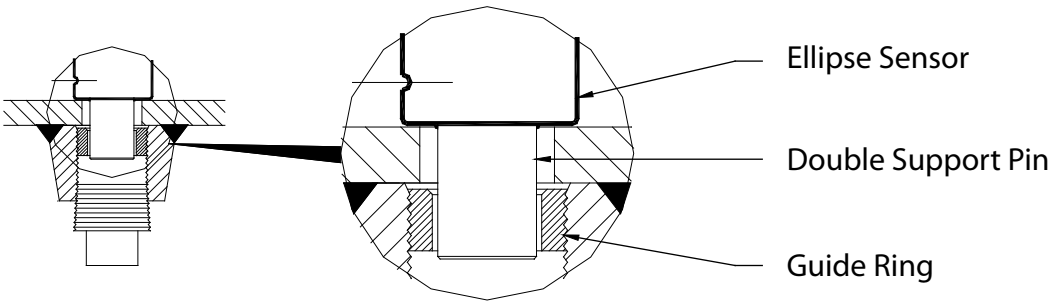

Figure 4: Double support pin

4. While holding the AHZ Ellipse in its fully inserted position, align the sensor head with the direction of flow as in step 7, *"Installation Instructions, Single Support" on page 4*.
5. Check that the AHZ Ellipse is in the correct orientation and spans the inside of the pipe. Tighten the flange nuts and bolts.
6. Install the plug into the end of the double support weld-o-let. Tighten the plug to prevent leakage. Make sure there is no leakage in the system.
7. Follow steps 11 through 14 in *"Installation Instructions, Single Support" on page 4*.

TYPICAL INSTALLATION FOR AHZ ELLIPSE WITH DIFFERENTIAL PRESSURE TRANSMITTER

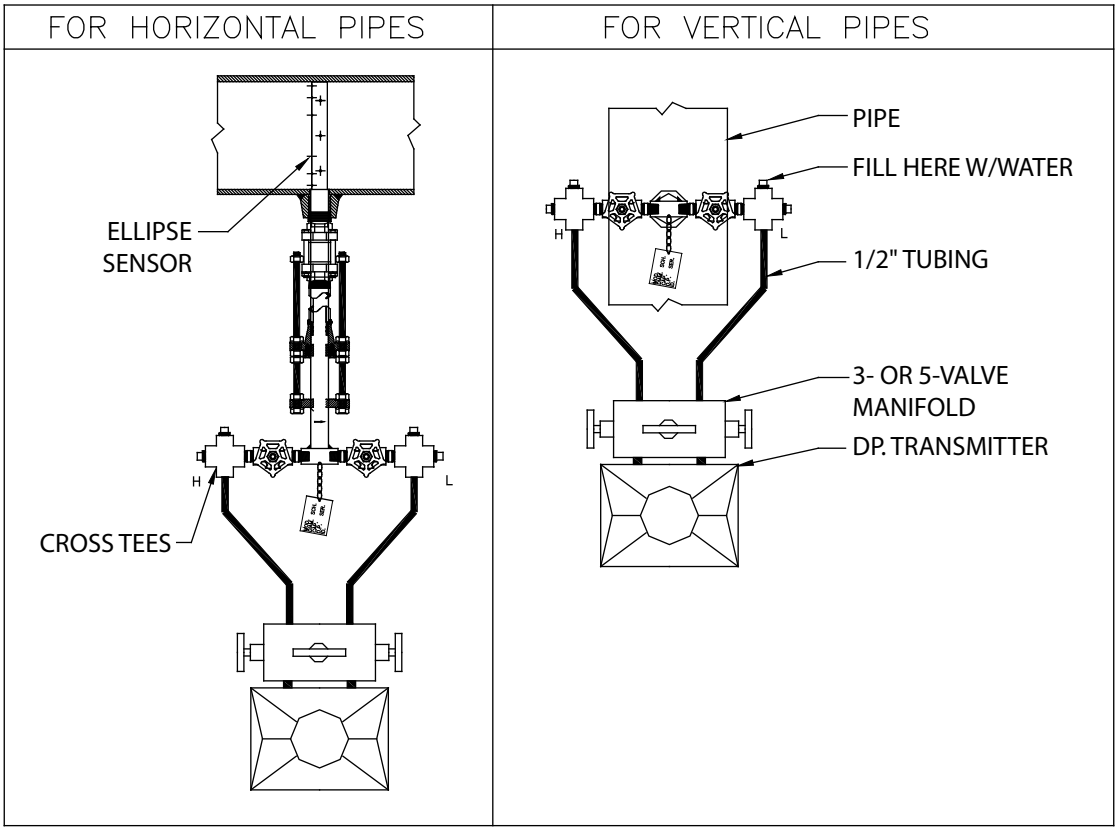

Figure 5: Typical installation

LOCATION INSTRUCTIONS

Straight pipe requirements: Accuracy is affected by the piping configurations due to the disturbances of the flow profile. A fully developed symmetrical flow profile is achieved with the minimum upstream and downstream recommended lengths.

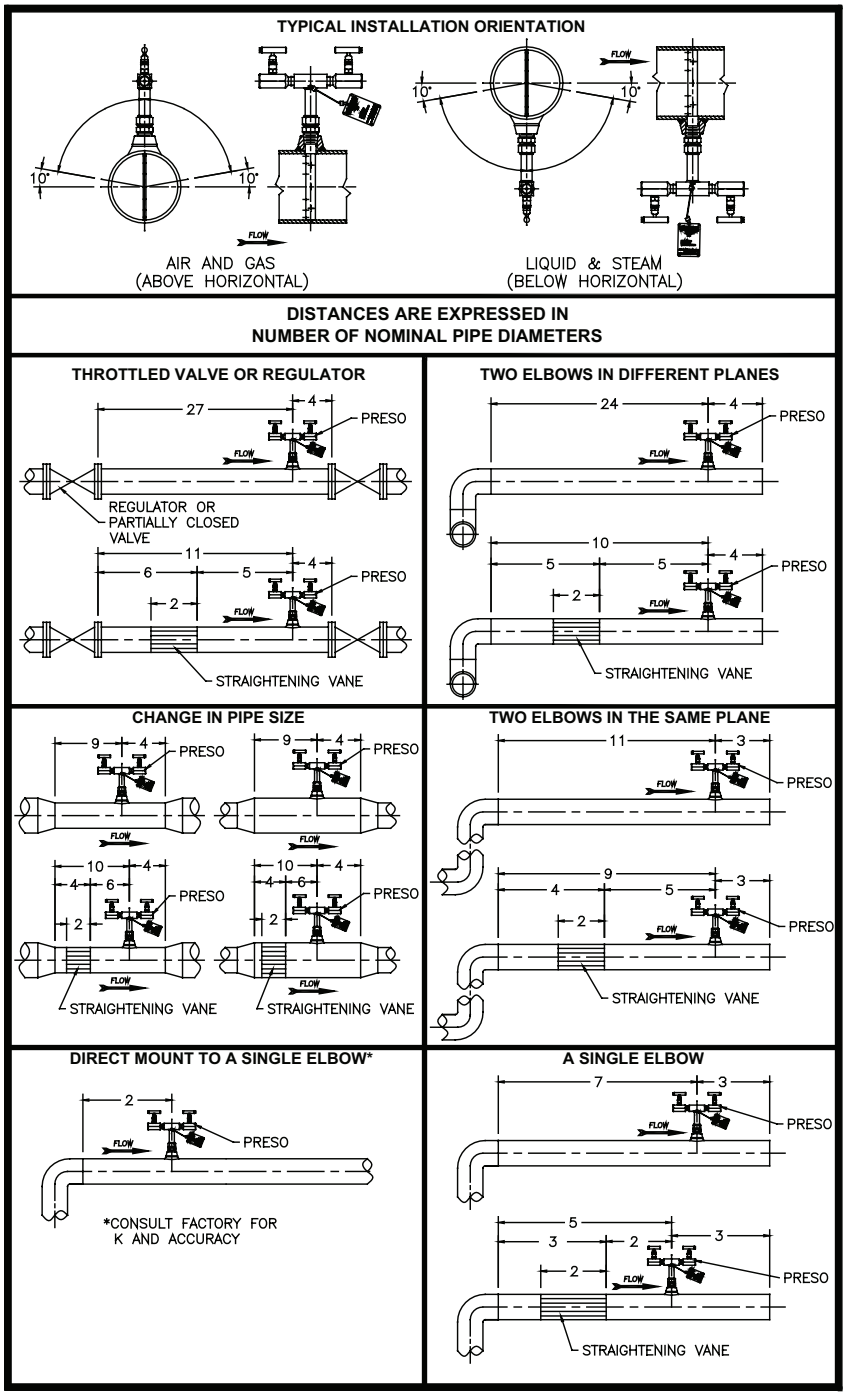

Figure 6: Location instructions

FLOW CURVE

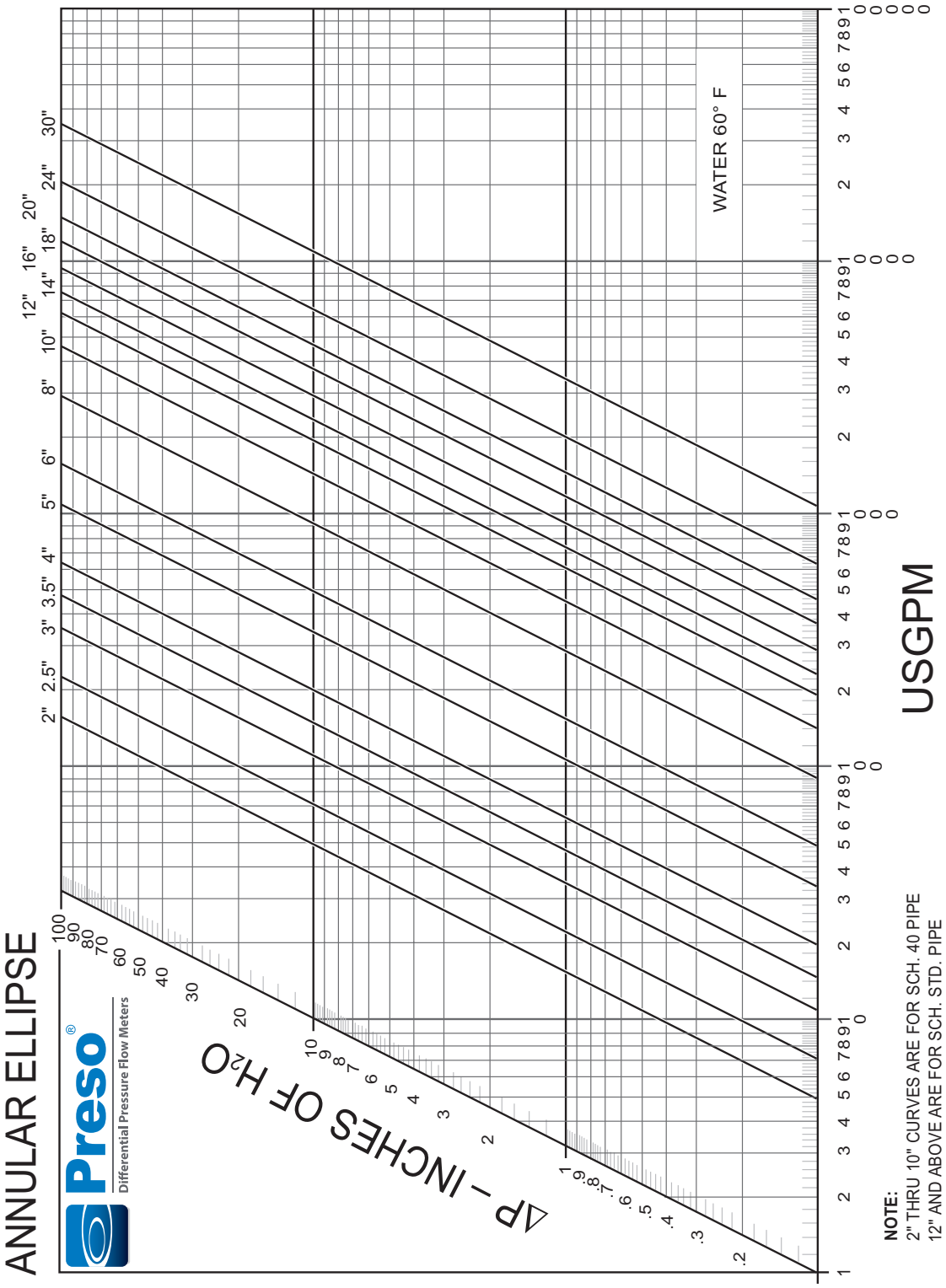

Figure 7: Annular flow curve

Control. Manage. Optimize.

Preso is a registered trademark of Badger Meter, Inc. Other trademarks appearing in this document are the property of their respective entities. Due to continuous research, product improvements and enhancements, Badger Meter reserves the right to change product or system specifications without notice, except to the extent an outstanding contractual obligation exists. © 2021 Badger Meter, Inc. All rights reserved.

www.badgermeter.com