Preso®
Differential Pressure Flow Meters

Ellipse® Pitot Tube Meter

BAR Annular Commercial Meter

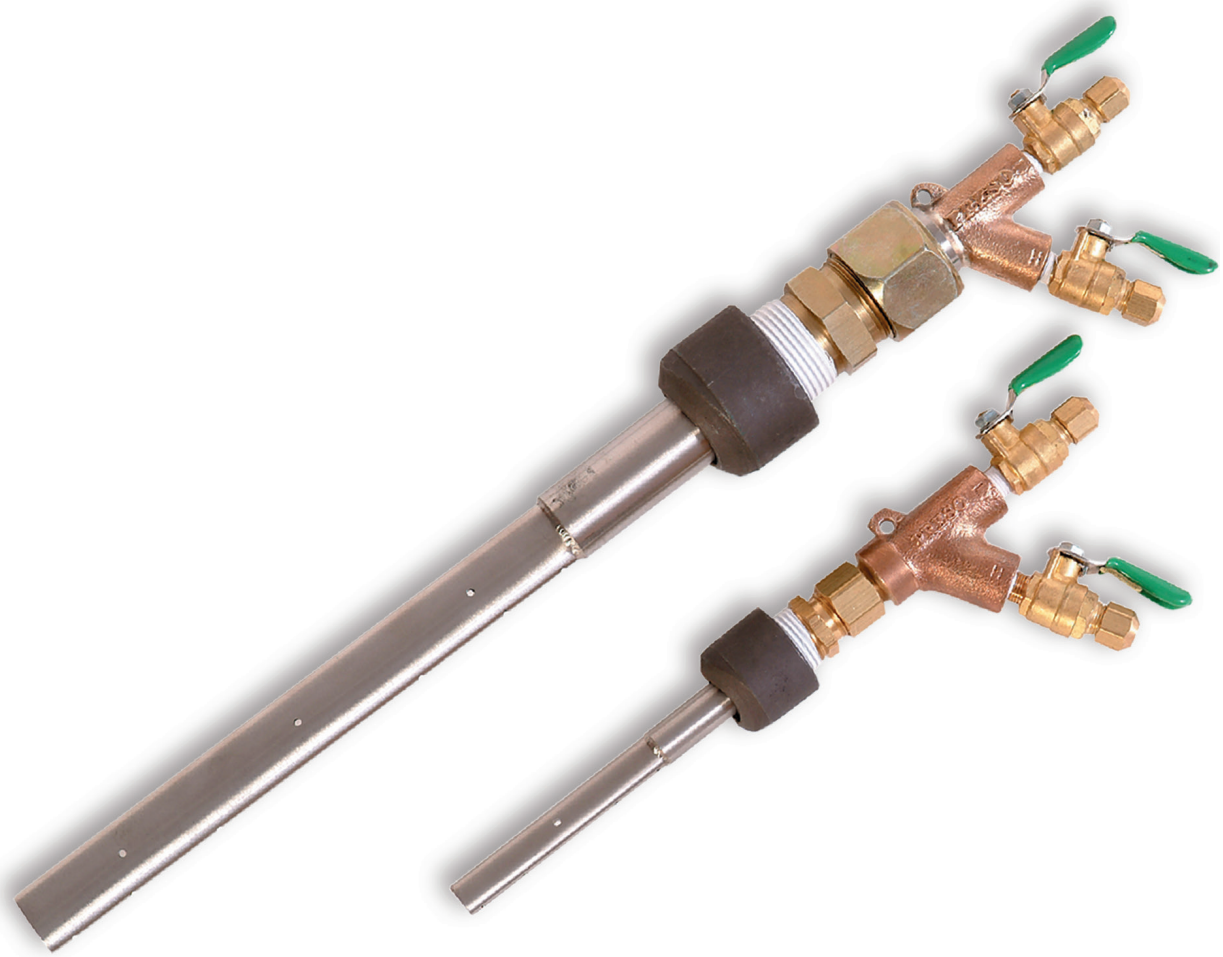

Badger Meter

PTT-UM-00324-EN-03 (July 2021)

User Manual

CONTENTS

Introduction. 3

Specifications. 3

Pipe Orientation and Sensor Mounting 4

Installation Instructions, Single Support 5

Installation Instructions, Double Support 6

Preso Ellipse Location Instructions 7

Flow Curve 8

INTRODUCTION

The Preso patented elliptical design outperforms and provides greater accuracy than traditional differential pressure flow measurement devices. This differential pressure flow meter is designed with a series of ports facing the upstream velocity pressures, as well as flow sensing ports strategically located ahead of the trailing edge flow separation.

The multi-ported, self-averaging flow element consists of an elliptical shape with two independent flow sensing chambers. The impact velocity sensing holes (high pressure) are located along the leading edge and the true static sensing holes (low pressure) are on the exterior probe side. The BAR Ellipse comes with instrument shutoff valves with provisions to accept a transmitter or direct indicating meter.

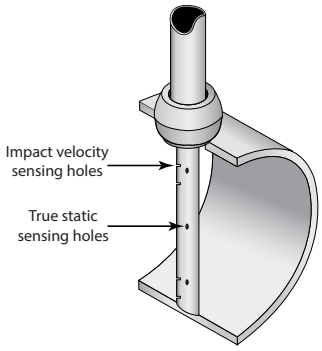

Figure 1: BAR Ellipse pressure sensing holes

SPECIFICATIONS

Applications	Liquids and gases
Pipe Sizes	2…24 in. (50…610 mm)
Pressure	400 psi (2760 kPa) maximum
Temperature	250° F (120° C) maximum
Accuracy	±0.75% of reading
Turndown Ratio	17:1 with no vacuum effect
Standard Components	Y-type head, brass 1/8 in. FNPT connection Sensor connection: 2…5 in., Ellipse 1/2 in.; 1/2 in. brass compression fitting with SS ferrule 6…12 in., Ellipse 7/8 in.; 1 in. CS compression fitting with SS ferrule 14…24 in., Ellipse 1-1/4 in.; 1-1/4 in. brass compression fitting with SS ferrule CS 3000 lb thread fitting, ASTM A105 316/316L SS Ellipse sensor Instrument valves (2 per sensor), 1/4 in. SAE flare brass ball type Polycarbonate ID tag with wire
Reynolds Number	Greater than 75,000 maintains most accurate flow measurements Less than 75,000 consult factory for estimated results
Resonance	If greater than 0.8, use double support

Table 1: Specifications

PIPE ORIENTATION AND SENSOR MOUNTING

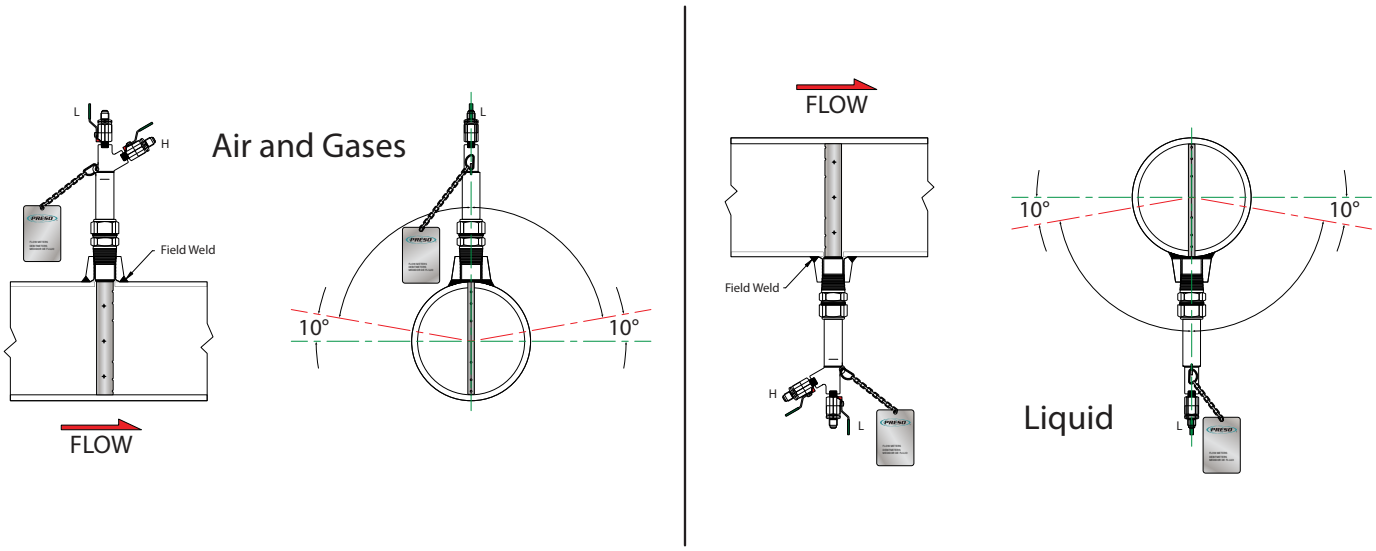

Figure 2: Horizontal pipe installation

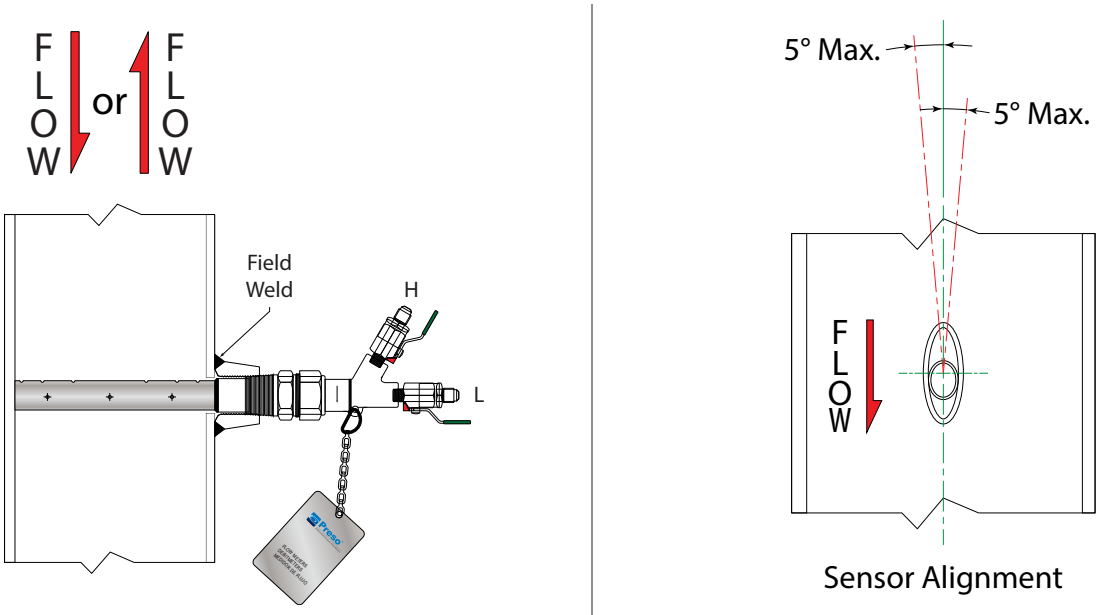

Figure 3: Vertical pipe installation

NOTE: The preferred flow direction for air and gas is downward. The preferred flow direction for liquid is upward. *Figure 3* represents installation for downward flows.

INSTALLATION INSTRUCTIONS, SINGLE SUPPORT

1. Choose the proper location to install the BAR Ellipse using AGA/ASME standards (or equivalent). See *Figure 2* and *Figure 3*.
2. Grind the surface of the pipe where the BAR Ellipse is to be inserted to provide a clean area for welding.
3. Weld the supplied thread-o-let to the pipe using standard codes for your application (1/16 in. weld gap recommended). Take care to protect the threads during the welding process.
4. Drill a hole through the pipe wall according to *Table 2*.

Pipe Size	Model/Sensor	Weld Connector	Drill Bit
2…5 in.	BAR (1/2 in.)	1/2 in.	5/8 in.
6…12 in.	BAR (7/8 in.)	1 in.	1-1/8 in.
14…24 in.	BAR (1-1/4 in.)	1-1/4 in.	1-3/8 in.

Table 2: Single support drill bit size

5. De-burr the hole just drilled, especially on the inside of the pipe.
6. Assemble the supplied compression fitting as shown in *Figure 4*. Thread the assembled compression fitting into the thread-o-let manually. With a wrench, tighten the body of the fitting another 1-1/4 turns, being careful not to tighten the compression nut.

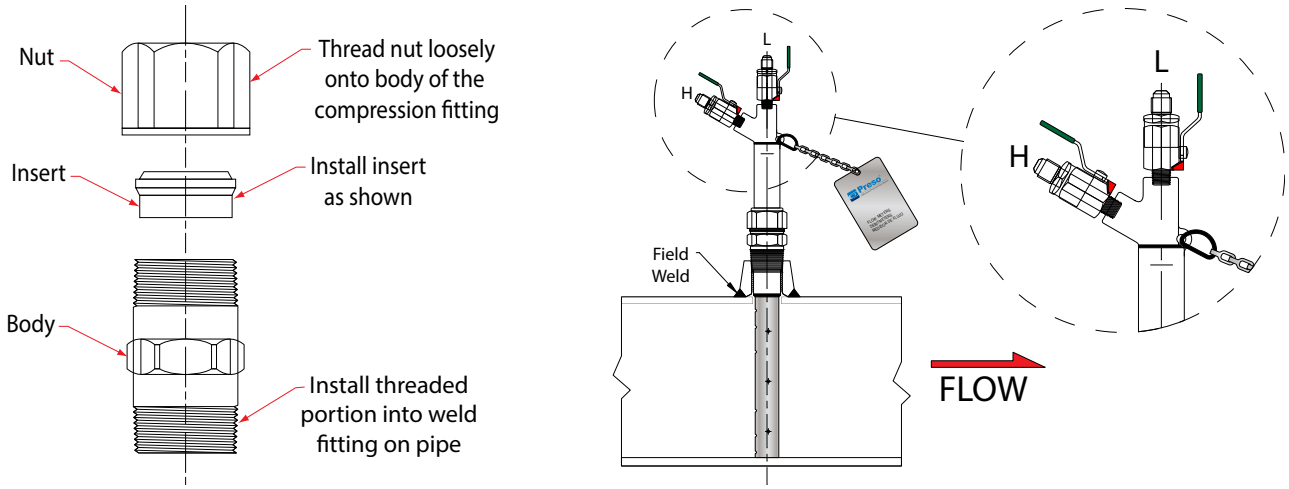

Figure 4: Single support installation

7. Install the instrument valves (optional) at the BAR Ellipse head connections. Make sure that the valves are fully closed to prevent them from leaking during start-up.
8. Insert the BAR Ellipse through the compression fitting. Carefully push the sensor into the pipe until it reaches the opposite wall.
9. While holding the BAR Ellipse in its fully inserted position, align the arrow on the sensor head with the direction of flow. See *Figure 4*.
10. Manually tighten the compression nut in order to prevent leakage, then use a wrench to tighten the compression nut another 1-1/4 turns.

INSTALLATION INSTRUCTIONS, DOUBLE SUPPORT

1. Follow steps 1 through 7 in *"Installation Instructions, Single Support" on page 5*. At 180° from, and on the same plane as, the previously drilled hole, grind the surface of the pipe to provide a clean area for welding. Drill a hole and de-burr, especially on the inside of the pipe. The hole used for the double support should be sized according to *Table 3*.

Pipe Size	Model/Sensor	Weld Connector	Drill Bit
2…5 in.	BAR (7/16 in.)	1/2 in.	3/8 in.
6…12 in.	BAR (7/8 in.)	1/2 in.	1/2 in.
14…24 in.	BAR (1-1/4 in.)	1 in.	7/8 in.

Table 3: Double support drill bit size

2. Weld the double support thread-o-let, making sure that it is centered with the drilled hole (1-1/16 weld gap recommended).
3. Install the BAR Ellipse sensor through the two holes. Make sure that the double support pin passes through the guide ring. See *Figure 5*.

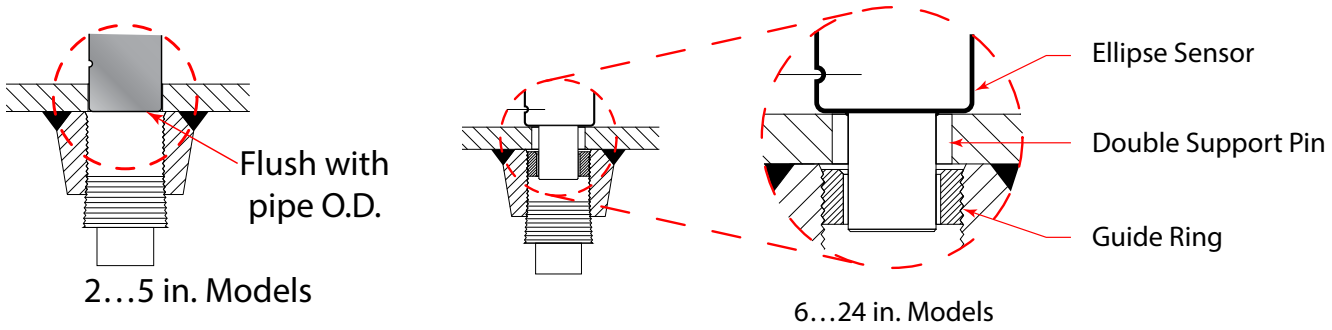

Figure 5: Double support installation

4. Align the arrow on the sensor head in the direction of flow as in step 9 in *"Installation Instructions, Single Support" on page 5*.
5. Make sure the BAR Ellipse is in the correct orientation and spans the inside of the pipe. Manually tighten the compression nut, then use a wrench to tighten it another 1-1/4 turns.
6. Install the plug into the end of the double support thread-o-let. Tighten the plug to prevent leakage.

PRESO ELLIPSE LOCATION INSTRUCTIONS

Straight pipe requirements: Accuracy is affected by the piping configurations due to the disturbances of the flow profile. A fully developed symmetrical flow profile is achieved with the minimum upstream and downstream recommended lengths.

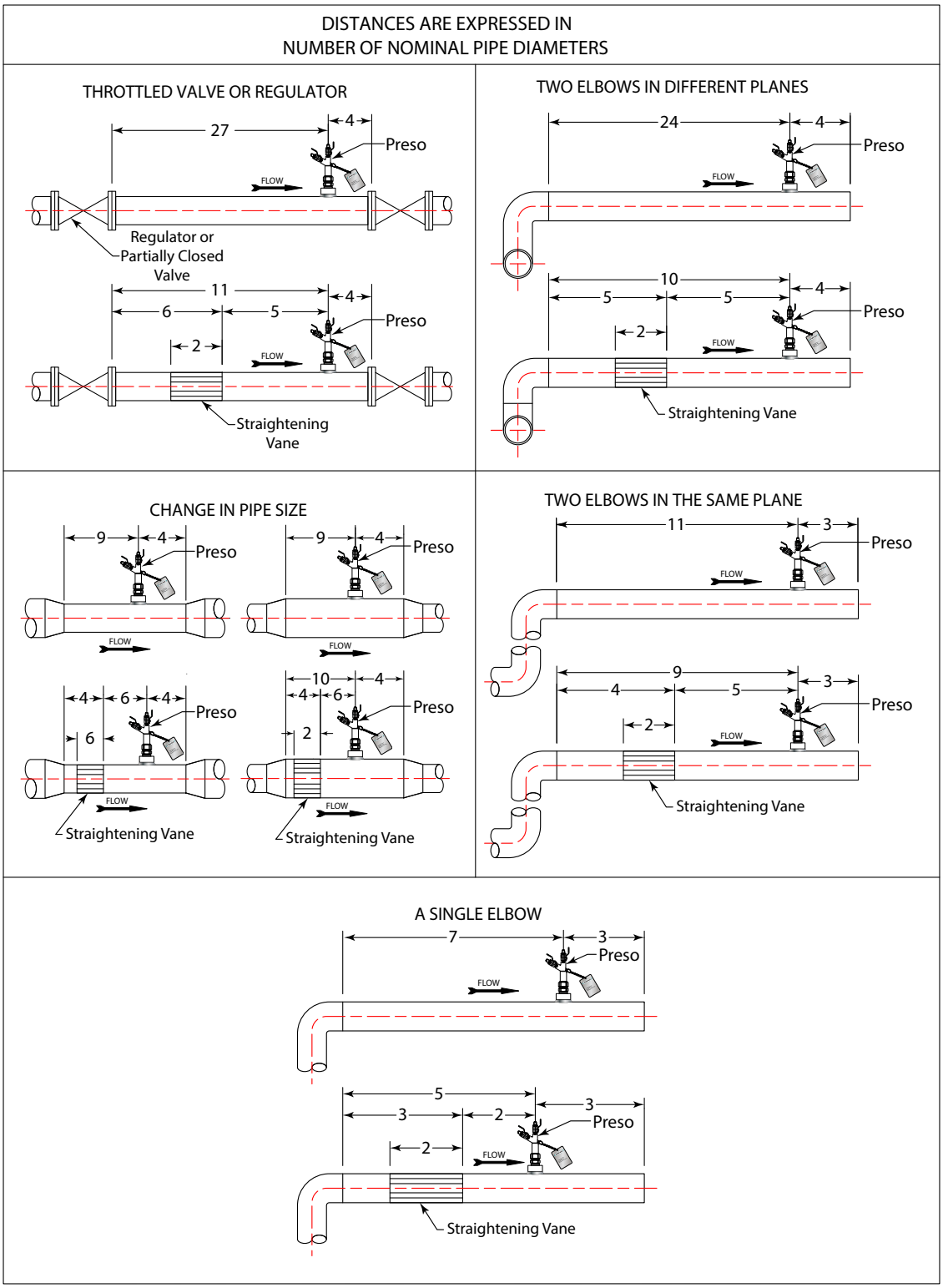

Figure 6: Straight pipe requirements

FLOW CURVE

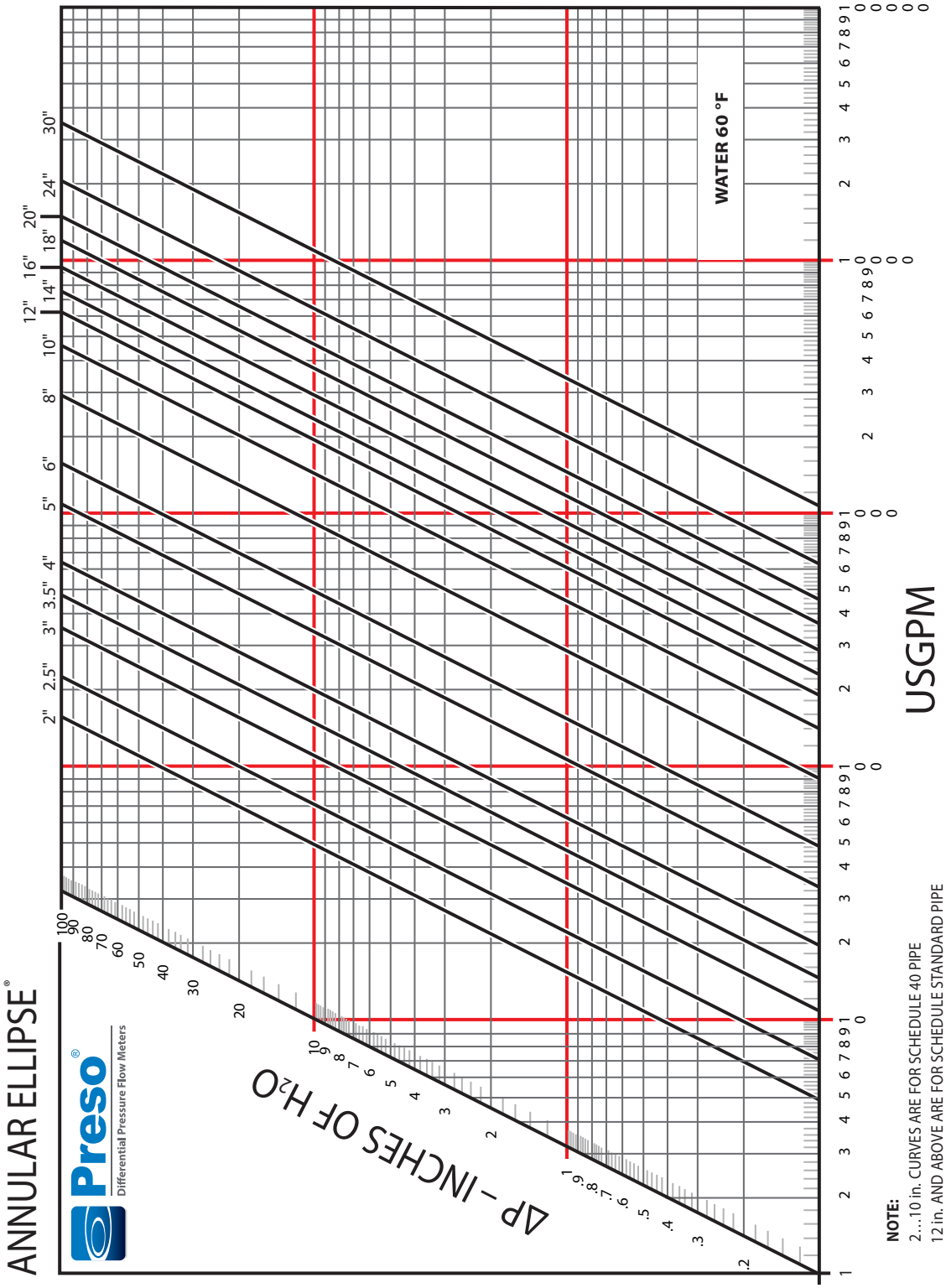

Figure 7: Flow curve

Control. Manage. Optimize.

Preso is a registered trademark of Badger Meter, Inc. Other trademarks appearing in this document are the property of their respective entities. Due to continuous research, product improvements and enhancements, Badger Meter reserves the right to change product or system specifications without notice, except to the extent an outstanding contractual obligation exists. © 2021 Badger Meter, Inc. All rights reserved.

www.badgermeter.com