Preso®
Differential Pressure Flow Meters

Ellipse® Pitot Tube Meter

ASF Annular Flanged Steam Meter

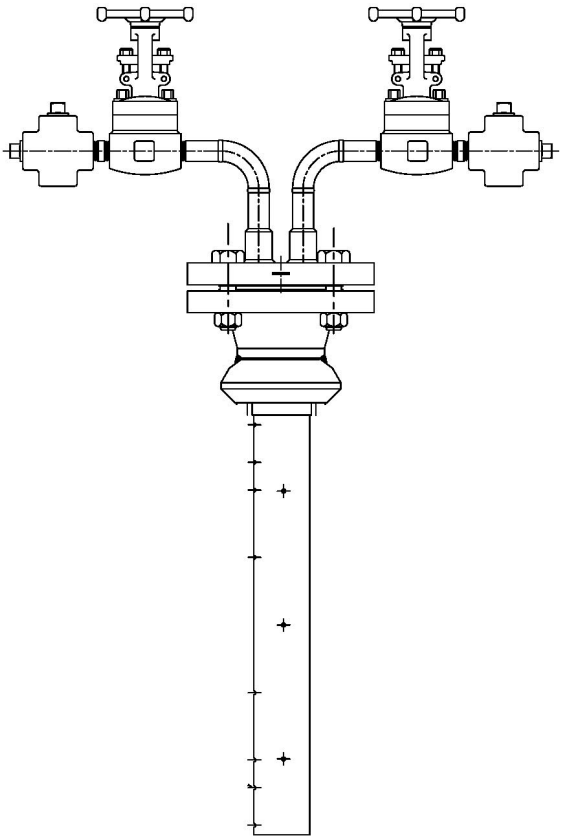

Badger Meter

PTT-UM-00522-EN-03 (August 2021)

User Manual

CONTENTS

Introduction. 3

Specifications 3

Pipe Orientation and Sensor Mounting 4

For General Steam Applications 4

Installation Instructions, Single Support 5

Installation Instructions, Double Support 6

Typical Installation with Differential Pressure Transmitter 6

Location Instructions 7

Flow Curve 8

INTRODUCTION

The patented Preso elliptical design outperforms and provides greater accuracy than traditional differential pressure flow measurement devices. This differential pressure flow meter is designed with a series of ports facing the upstream velocity pressures, as well as flow sensing ports strategically located ahead of the trailing edge flow separation.

The multi-ported, self-averaging flow element consists of an elliptical shape with two independent flow sensing chambers. The impact velocity sensing holes (high pressure) are located along the leading edge and the true static sensing holes (low pressure) are on the exterior probe side. Model ASF comes with instrument shutoff valves with provisions to accept a transmitter or direct indicating meter.

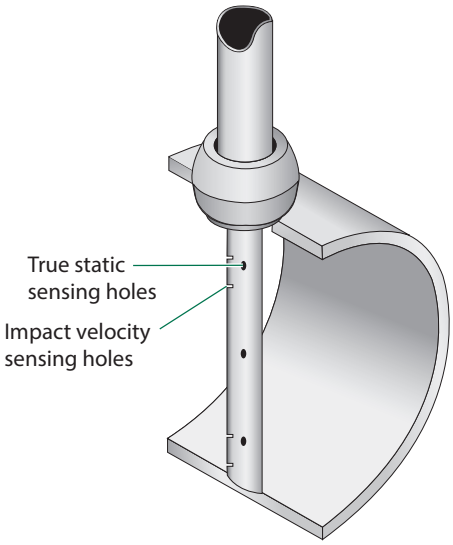

Figure 1: ASF pressure sensing holes

SPECIFICATIONS

Applications	Steam
Pipe Sizes	2…48 in. (50…1220 mm)
Pressure	Vary per flange ratings
Temperature	Vary per flange ratings
Accuracy	±0.75% of reading
Turndown Ratio	17:1 with no vacuum effect
Standard Components	T-type head, 316 SS 1/2 in. FNPT connection CS compression fitting with SS ferrule CS 3000 lb weld fitting, ASTM A105 316/316L SS Ellipse sensor 316 SS ID tag with wire
Reynolds Number	Greater than 75,000 maintains most accurate flow measurements Less than 75,000 consult factory for estimated results
Resonance	If greater than 0.8, use double support per ASME PTC 19.3.

Table 1: ASF specifications

PIPE ORIENTATION AND SENSOR MOUNTING

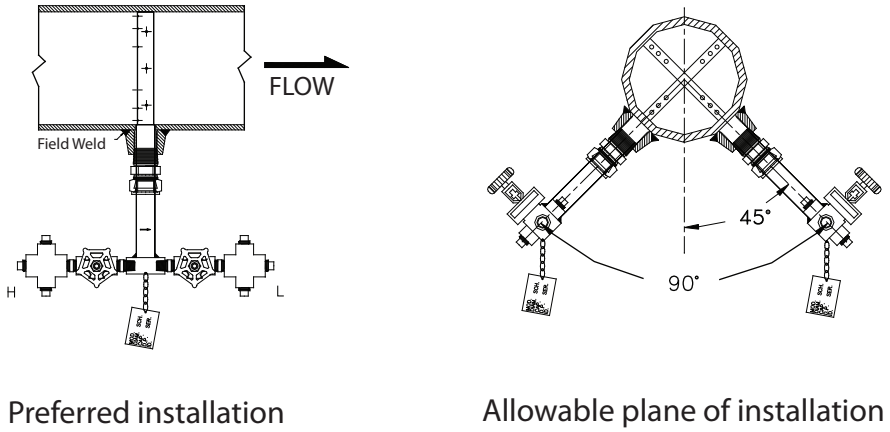

Figure 2: Horizontal pipe installation

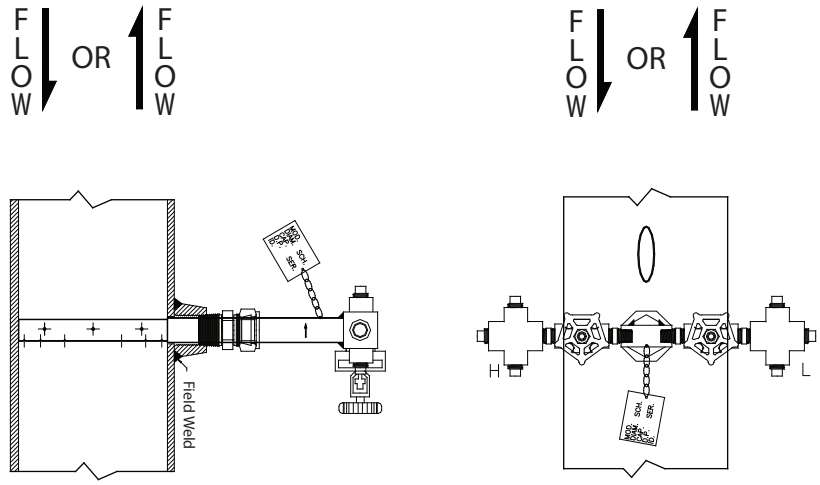

NOTE: Illustration represents installation for downward flow.

Figure 3: Vertical pipe installation

For General Steam Applications

NOTE: Instrument valves should be mounted at the same elevation to maintain equal condensation levels.

INSTALLATION INSTRUCTIONS, SINGLE SUPPORT

1. Choose the proper location to install the ASF Ellipse using AGA/ASME standards (or equivalent). See *"Location Instructions" on page 7*.
2. Grind the surface of the pipe where the ASF Ellipse is to be inserted to provide a clean area for welding.
3. Drill a hole through the pipe wall according to *Table 2*.

Model / Sensor	Weld Connector	Drill Bit
ASF (7/8 in.)	1 in.	1-1/8 in.
ASF1 (1-1/4 in.)	1-1/4 in.	1-3/8 in.
ASF2 (2-1/4 in.)	3 in.	2-3/4 in.

Table 2: Single support drill bit size

4. Deburr the hole just drilled, especially on the inside of the pipe.
5. Weld the mating flange assembly to the pipe. Align the holes. Allow 1/16 in. weld gap between the mounting flange and the pipe.
6. Install the gasket and place the ASF Ellipse sensor into the pipe.
7. While holding the ASF Ellipse in its fully inserted position, align the arrow on the sensor head with the direction of flow. See *Figure 4*.

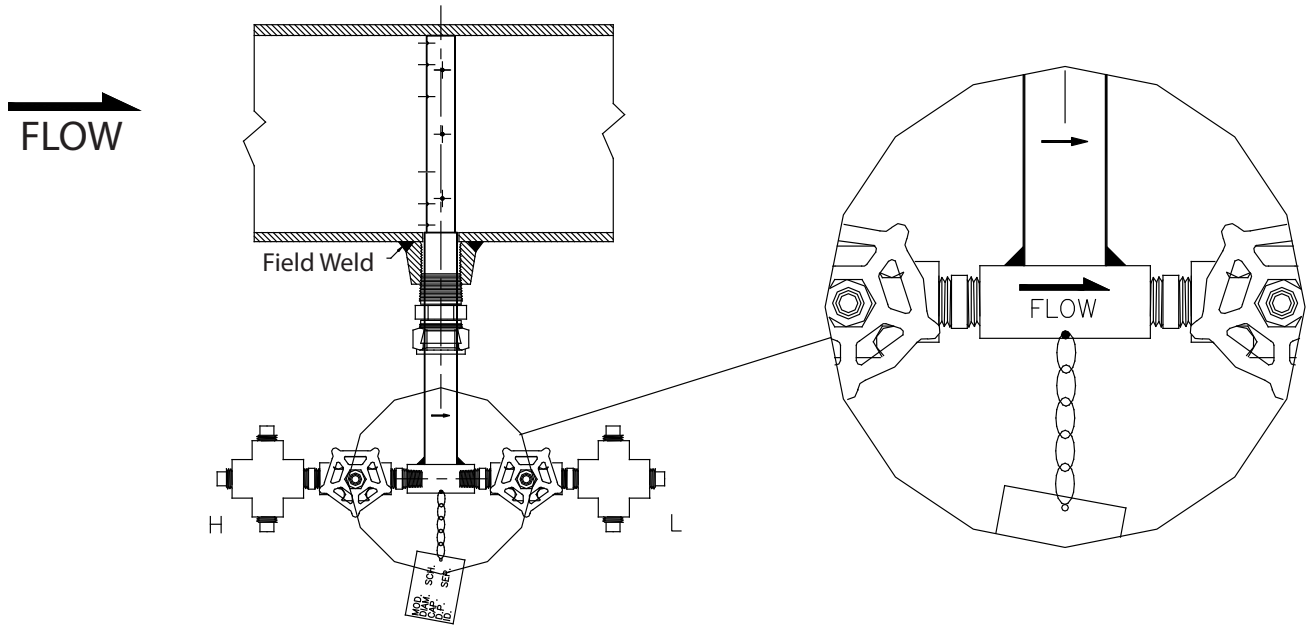

Figure 4: Sensor alignment

8. Tighten all of the bolts on the flange and assemble all the parts that make the instrument head.
9. Connect the 1/2 in. tubing to the connections on the forged cross components. Connect these lines to a three-valve manifold transmitter.
10. Verify that the instrument valves are FULLY CLOSED. Remove the 1/2 in. plugs from the top and side ports of the two forged cross tees.
11. Slowly pour water into the top ports of each forged cross tee until the system is full. Water will flow out of the side ports of both crosses.
12. Reinstall the 1/2 in. plugs into the top and side ports. Ensure that they are secure. Fully open the two gate valves.
13. Allow condensation levels to stabilize for 30 minutes before taking an instrument reading.

INSTALLATION INSTRUCTIONS, DOUBLE SUPPORT

1. Follow steps 1 through 4 in *"Installation Instructions, Single Support" on page 5*. At 180° from and on the same plane as the previously drilled hole, grind the surface of the pipe to provide a clean area for welding. Drill a hole and deburr, especially on the inside of the pipe. Size the hole used for the double support according to *Table 3*.

Model / Sensor	Weld Connector	Drill Bit
ASF (7/8 in.)	1/2 in.	1/2 in.
ASF1 (1-1/4 in.)	1 in.	7/8 in.
ASF2 (2-1/4 in.)	3 in.	2-3/4 in.

Table 3: Double support drill bit size

2. Weld the double support weld-o-let, making sure that it is centered with the drilled hole (1/16 in. weld gap recommended).
3. Install the ASF Ellipse sensor through the two holes. Make sure that the double support pin passes through the guide ring. See *Figure 5*.

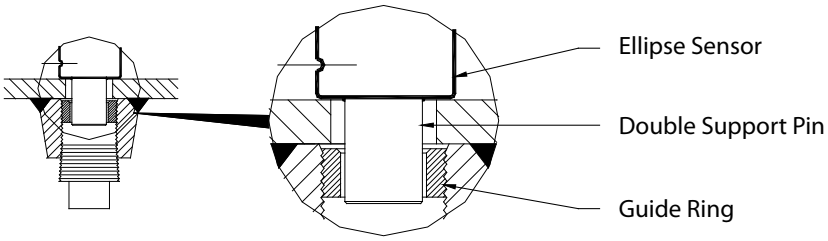

Figure 5: Double support pin

4. While holding the ASF Ellipse in its fully inserted position, align the sensor head with the direction of flow as in step 7, *"Installation Instructions, Single Support" on page 5*.
5. Check that the ASF Ellipse is in the correct orientation and spans the inside of the pipe. Tighten the compression nut manually, the tighten it another 1-1/4 turns using a wrench.
6. Install the plug into the end of the double support weld-o-let. Tighten the plug to prevent leakage. Make sure that there is no leakage in the system.
7. Follow steps 8 through 13 in *"Installation Instructions, Single Support" on page 5*.

TYPICAL INSTALLATION WITH DIFFERENTIAL PRESSURE TRANSMITTER

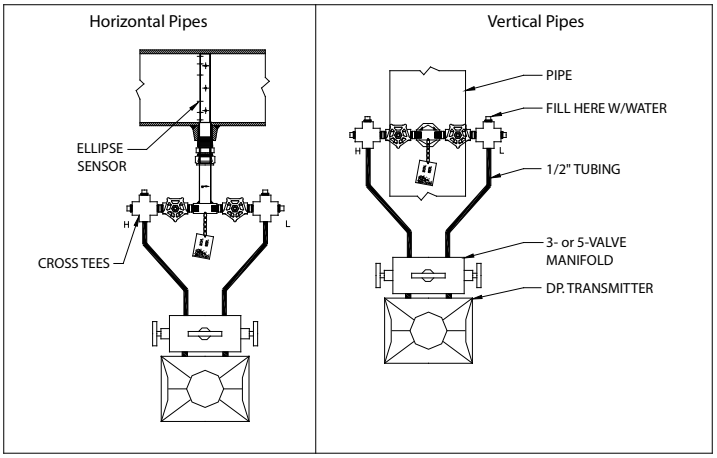

Figure 6: Typical installation

LOCATION INSTRUCTIONS

Straight pipe requirements: Accuracy is affected by the piping configurations due to the disturbances of the flow profile. A fully developed symmetrical flow profile is achieved with the minimum upstream and downstream recommended lengths.

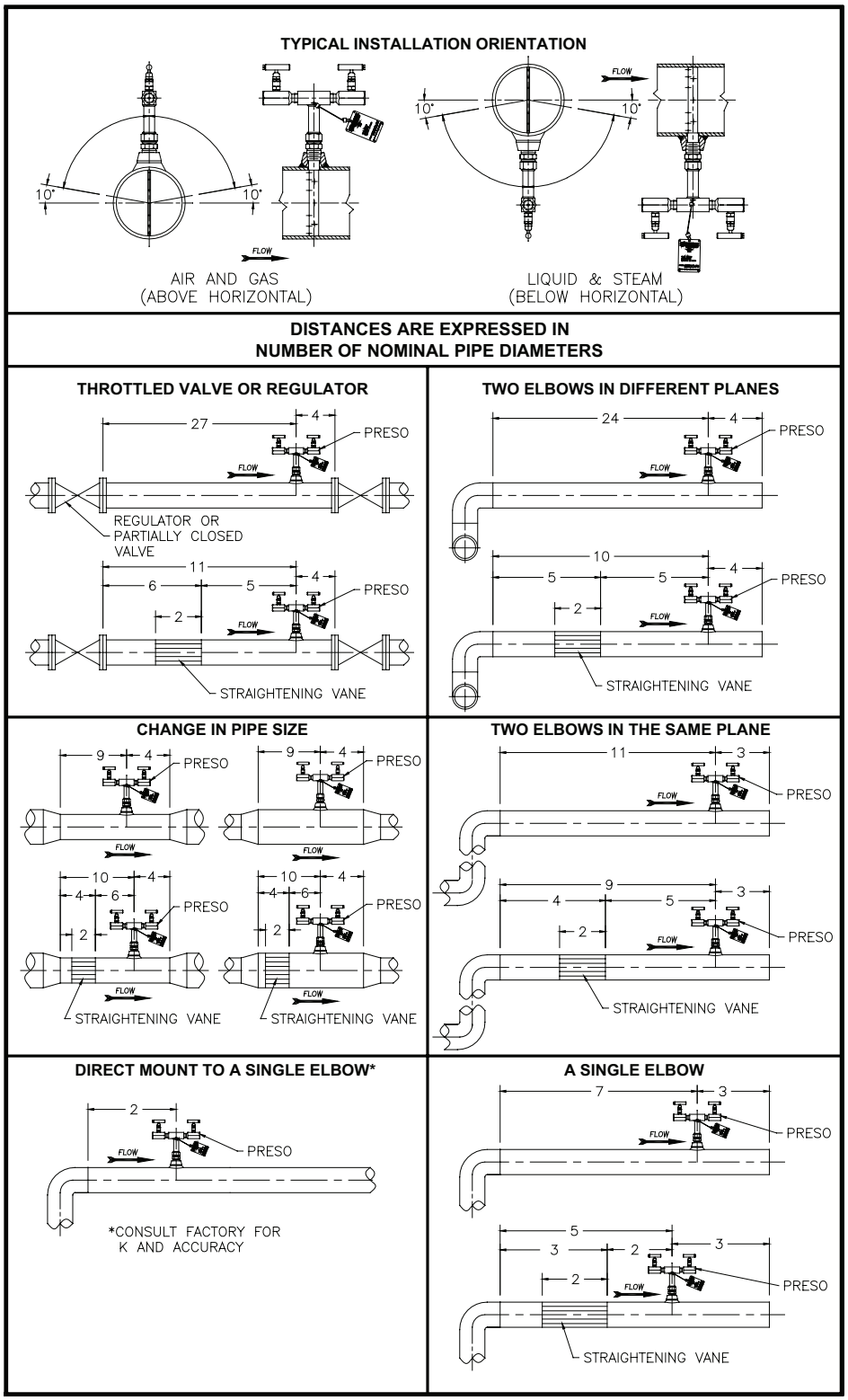

Figure 7: Location instructions

FLOW CURVE

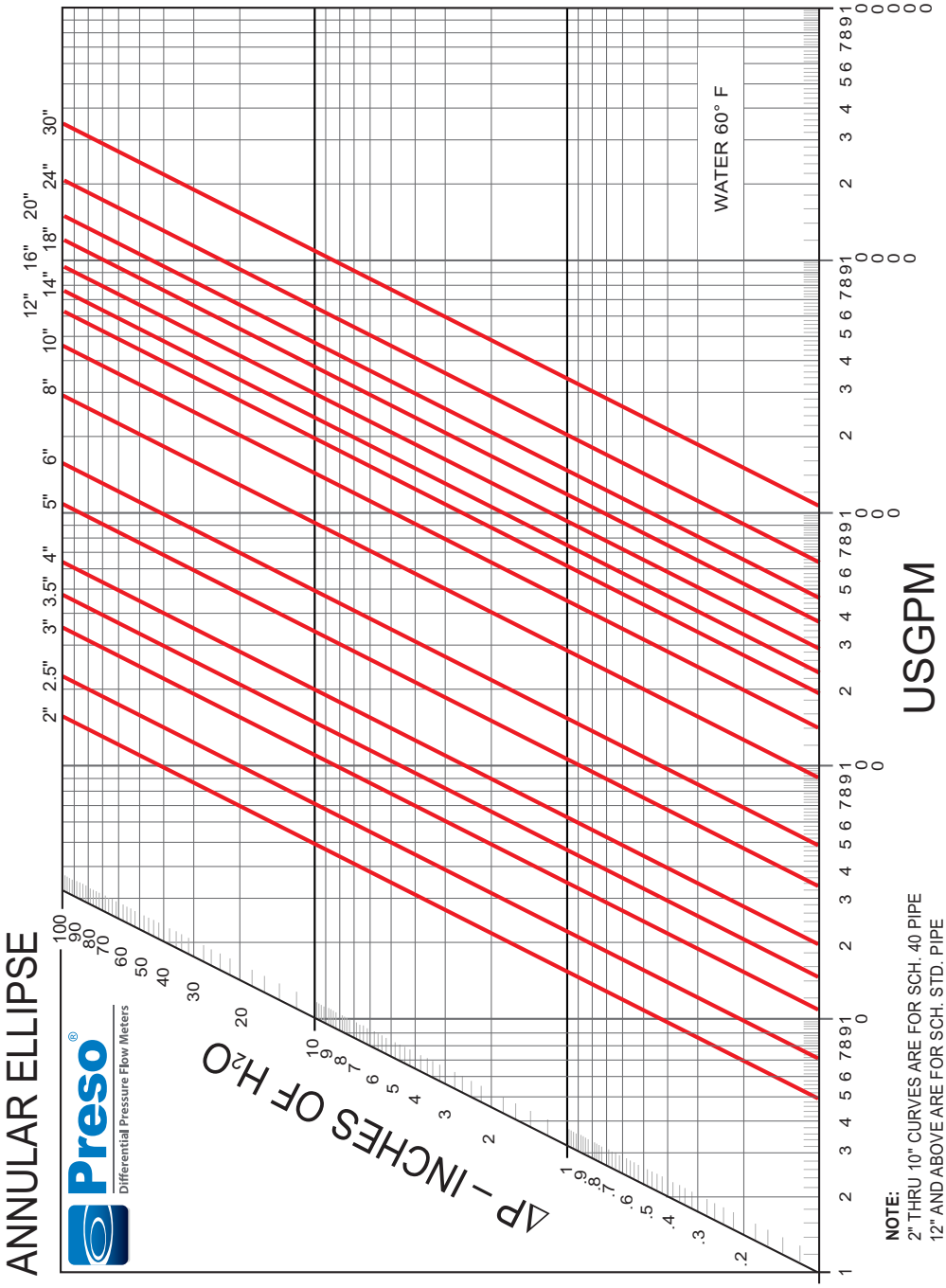

Figure 8: Flow curve

Control. Manage. Optimize.

Preso is a registered trademark of Badger Meter, Inc. Other trademarks appearing in this document are the property of their respective entities. Due to continuous research, product improvements and enhancements, Badger Meter reserves the right to change product or system specifications without notice, except to the extent an outstanding contractual obligation exists. © 2021 Badger Meter, Inc. All rights reserved.

www.badgermeter.com