Electric Flex Shaft Concrete Vibrators

WARNING: This product can expose you to chemicals including lead, which are known to the State of California to cause cancer, and Chromium, which are known to the State of California to cause birth defects and/or other reproductive harm. For more information go to *www.P65Warnings.ca.gov*

READ ALL INSTRUCTIONS

DANGER

DEATH OR SEVERE INJURY COULD RESULT FROM FAILURE TO FOLLOW THE SAFETY RULES LISTED BELOW.

- KEEP WORK AREA CLEAN: Cluttered areas invite injuries.
- CONSIDER WORK AREA ENVIRONMENT: Don't expose tools to rain. Keep work area well lit. Do not use tool in presence of flammable liquids or gases.
- GUARD AGAINST ELECTRIC SHOCK: Prevent body contact with grounded surfaces.
- KEEP CHILDREN AWAY: Do not let visitors contact tool or extension cord. All visitors should be kept away from work area.
- STORE IDLE TOOLS: When not in use, tools should be stored in a dry and high or locked-up place.
- DON'T FORCE TOOL: It will do the job better and safer at the rate which it was intended.
- USE THE RIGHT TOOL: Don't force small tool or attachment to do the job of a heavy-duty tool. Don't use the tool for a purpose not intended.
- DRESS PROPERLY: Do not wear loose clothing or jewelry. They can be caught in moving parts. Rubber gloves and non-skid footwear are recommended when working outdoors. Wear protective hair covering.
- USE SAFETY GLASSES AND EAR PROTECTION: Also use face mask if operation is dusty.
- DON'T ABUSE CORD: Never carry tool by cord or yank it to disconnect from receptacle. Keep cord from heat, oil and sharp edges.

CAUTION

USE ONLY CORRECT VIBRATOR HEAD AND ELECTRIC MOTOR COMBINATIONS. FOLLOW THE CHART TO THE RIGHT.

- DON'T OVERREACH: Keep proper footing and balance at all times.
- MAINTAIN TOOLS WITH CARE: Keep tools clean for better and safer performance. Follow instructions for lubricating and changing accessories. Inspect tool cords periodically and if damaged, have repaired by authorized service facility. Inspect extension cords periodically and replace if damaged. Keep handles dry, clean and free from oil and grease.
- DISCONNECT TOOLS: When not in use, before servicing and when changing accessories.
- AVOID UNINTENTIONAL STARTING: Be sure switch is off when plugging in.
- OUTDOOR USE EXTENSION CORDS: When tool is used outdoors, use only extension cords intended for outdoor use and so marked.
- STAY ALERT: Watch what you are doing. Use common sense. Do not operate tool when you are tired.
- CHECK DAMAGED PARTS: Before further use of the tool, a guard or other part that is damaged should be carefully checked to determine that it will operate properly and perform its intended function. Check for alignment of moving parts, binding of moving parts, breakage of parts, mounting and any other condition that may affect its operation. A guard or other part that is damaged should be properly repaired or replaced by an authorized service center unless otherwise indicated elsewhere in this service manual. Do not use it if switch does not turn on or off.

Electric Motor		Vibrator Head		Vibrator Shaft	
Amps	Cat. No.	Size (in.)	Cat. No.	Length	CK Series
15	903	1-3/8	750-FI	2…20 ft	9500
		1-3/4	750-GI		
7.5	903-230	2	750-LI		
		2-1/4	750-MI		

SAVE THESE INSTRUCTIONS

Operator's and Service Manual

DOUBLE INSULATED TOOLS

Polarized Plugs

To reduce the risks of electric shock, all 115V Double Insulated motors have a polarized plug (one blade is wider than the other). This plug will fit in a polarized outlet only one way. If the plug does not fit fully in the outlet, reverse the plug. If it still does not fit, contact a qualified electrician to install the proper outlet. Do not change the plug in any way.

TOOL IDENTIFICATION

Identification Mark

For identification, in case the name plate has been removed, a code has been stamped on the die cast housing as shown in Figure 1 below.

Order only identical replacement parts. Be sure to include part number, description, and quantity when ordering.

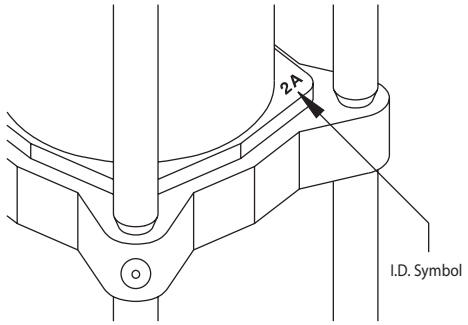

Figure 1: Identification symbol

Model	115V Stamp	230V Stamp
902/902A	2A	2V
903/993	3	3V

EXTENSION CORDS

When selecting an extension cord for use with Wyco electric motor cord sets using a 2-prong polarized plug (double insulated motors), an equivalent plug set must be used. Extension cords must be approved for outdoor use and the wire gauge of the cord must be selected from the following table.

Extension Cord Wire Size Requirements (AWG) Per Table 55.1 UL 45 Portable Minimum Gauge for Cord Sets						
Motor Number	**Volts**	**Rated Amps**	**0…25 ft**	**26…50 ft**	**51…100 ft**	**101…150 ft**
903	115	15	14	12	****	****
903	230	7.5	18	16	14	12

**** Extension cords longer than 50 feet are not recommended.

SERVICE AND MAINTENANCE INSTRUCTIONS

Service the vibrator head after every 50 hours of operation to insure trouble-free running on the job.

When servicing, always replace hex driver, seals and bearings. (Or bushing for D & EH Heads) - (See drawings Page 8)

All heads are equipped with seals at the flexible shaft end. All heads contain oil, the seals serve a double purpose, to keep the oil in the head and to keep the grease from the flexible shaft out of the head.

1. Hold the nose end in a vise and unscrew the end cap (counter-clockwise) with a chain wrench or a good pipe wrench.

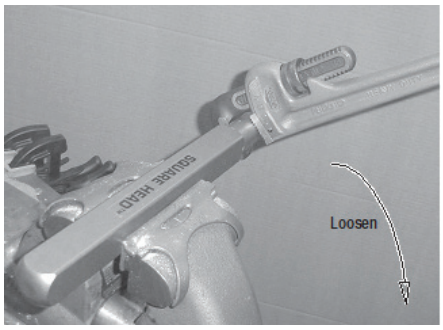

2. Pull the eccentric rotor assembly out of the housing. (If the bearings are stuck and you have difficulty removing them from the housing, screw end cap partly back into the housing and bounce the head and cap down on a block of wood, in order to loosen the bearings from their seat, then pull out the rotor assembly.)

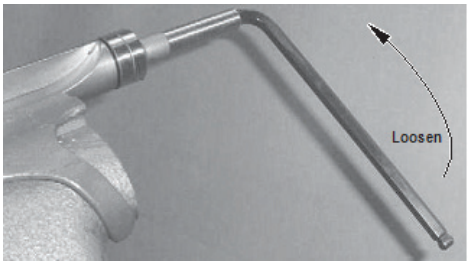

NOTE: Hexagonal driver has left-hand threads.

3. Flush rotor assembly and housing with solvent and wipe all parts clean. Replace bearings, seals and hex driver. Maintain concentric alignment of hex driver with respect to rotor shaft. Refill with proper amount of Wyco No. 514-O non-foaming vibrator oil. Apply Loctite 545 or equivalent to threads on both ends of rotor.

See chart below.

Head Size	Oil Required
D - 13/16 in. Square	1/2 ounce
EH - 1 in. Square	3/4 ounce
1.38B - 1-3/8 in. Square	1 ounce
1.75B - 1-3/4 in. Square	1-1/4 ounces
2.00B - 2 in. Square	2 ounces
2.25B - 2-1/4 in. Square	3-1/2 ounces

4. Replace rotor assembly in head housing. Apply Loctite 545 adhesive/sealant or equivalent all around the threads of the end cap. Tighten and wipe off excess Loctite 545 adhesive/sealant.

FLEXIBLE SHAFT LUBRICATION

When vibrators are shipped completely assembled from the factory, the shafts are lubricated. If separate cores and casings are shipped, they require the following lubrication and break-in procedure.

To lubricate, lightly coat the core with grease (514-B Wyco shaft lubricant) while inserting it into the casing. Do not over lubricate since the surplus lubricant may get past the seal in the vibrator head. Over lubrication will also increase the amount of torque required to operate the vibrator resulting in additional stress on the motor and possibly early core and casing failure.

When adding lubricant on the job, after each 50 hours of operation, loosen the casing from the motor and pull out the core about 15…18 inches. Apply lubricant as above to the exposed section of core.

Reinstall core insuring that it engages with the vibrator head. During operation the grease will travel the full length of the casing.

A break-in procedure is required after the assembly of seperately shipped core & casing. This procedure involves repeatedly coiling the flex shaft from the head to the motor while the motor is running. The flex shaft should be coiled and uncoiled repeatedly until the amperage to operate the vibrator is reduced and remains constant. It must be reduced to a level lower than the rated amperage on the name plate. If an ammeter is not available, an increase in speed (RPM) can be heard. The coiling and uncoiling should be repeated until the speed increases and remains constant. If this procedure is not followed, additional torque will be required from the motor, thus reducing the motor life.

NOTE: When attaching vibrator head to flexible shaft casing, always use Permatex Form-a-Gasket No. 2 on the threads.

One of the greatest enemies of satisfactory performance of vibrator heads is water. As the head is submerged in the mix, water and cement try to get into the head. In addition to tightening the head onto the flexible shaft tightly, the threads must be coated with "Permatex Form-a-Gasket #2." This must be done each and every time that the head is removed and re-installed.

ELECTRIC CONCRETE VIBRATOR ASSEMBLY DRAWINGS

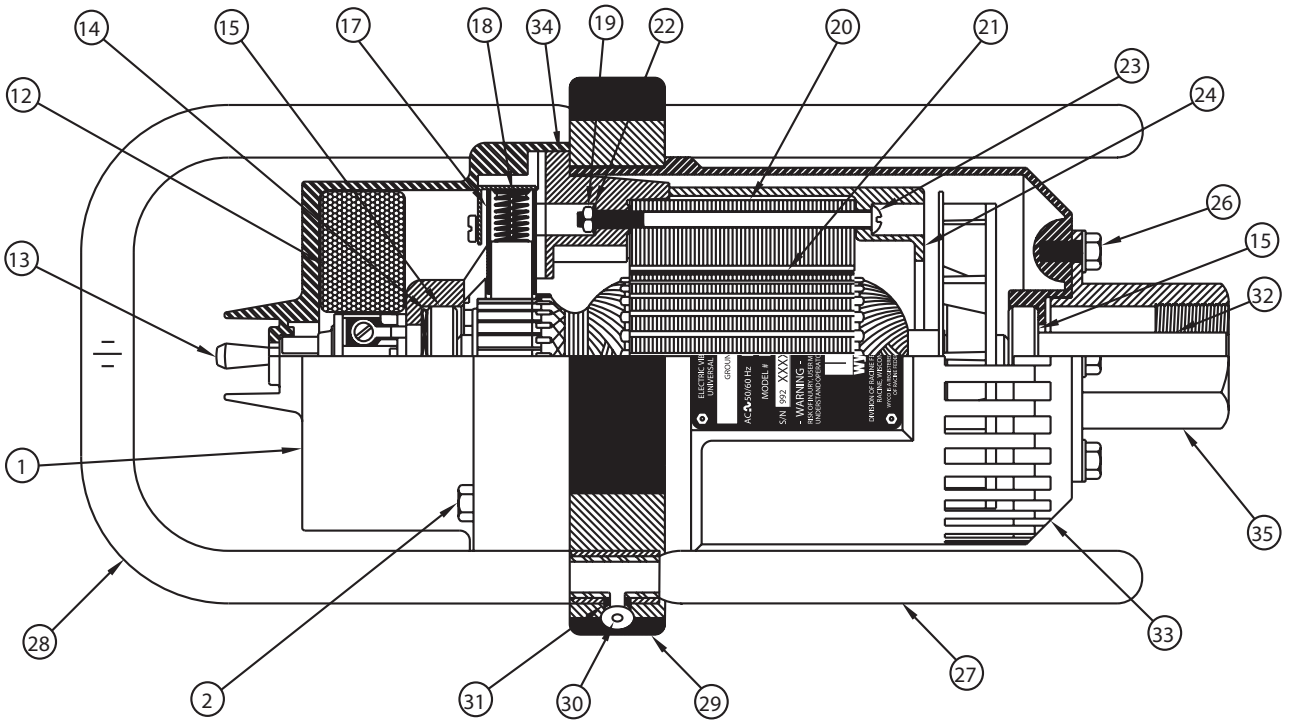

Model Number	115V Wire Color	230V Wire Color
903	White	Red

Model Number	115V Wire Color	230V Wire Color
903	Black	Black

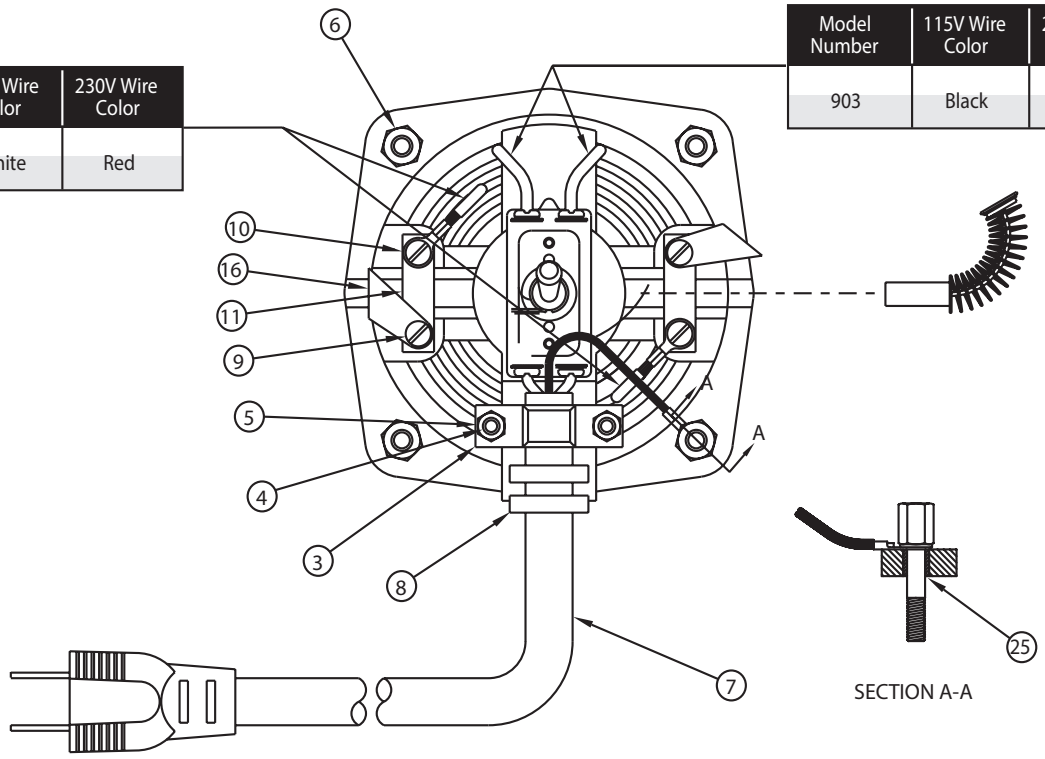

ELECTRIC CONCRETE VIBRATOR ASSEMBLY DRAWING PARTS LIST

Parts List (see drawings on page 4)

Item	Description	Qty	115V 15 Amp 903	230V 7.5 Amp 903
1	End Cap, Plastic; Elect Motor; Gold	1	415335	415335
2	Screw, Hex Head; Plastic; 1/4-20 x 1/2	4	415308	415308
3	Clamp, Cord	1	415324	415324
4	Bracket, Cord Clamp	1	415326	415326
5	Nut, Lock; 8-32; Nylon Insert; Zinc	2	415512	415512
6	Stud, Motor Housing	4	415309	415309
7	Cord Set, w/Plug	1	415328	415422
8	Grommet	1	415330	415330
9	Screw, Pan Head; #8-32 x 3/8 Long	4	415359	415359
10	Washer, Lock; #8	4	415360	415360
11	Clamp, Brush Holder	2	415322	415322
12	Filter	1	415554	415554
13	Switch, Toggle	1	415361	415361
14	Spring, Loading	1	415333	415333
15	Bearing, Ball; 1.18OD; .394 Bore	2	099909	099909
16	Retainer, Brush	2	415323	415323
17	Holder, Brush	2	415515	415515
18	Assy, Brush & Spring	2	415525	415525
19	Nut, Hex; #10-32	2	415363	415363
20	Field	1	415511	415521
21	Assy, Armature	1	415509	415539
22	Washer, Lock; #10	2	415362	415362
23	Screw, Field; #10-32 x 3-5/8	2	415358	415358
23	Screw, Field; #10-32 x 3	2	—	—
24	Sleeve, Field	1	765510	765510
25	Grounding Insert	1	—	—
26	Screw, Hex Thd Cut; 1/4-20 x 5/8	4	435510	435510
27	Frame, Tube; Inner	2	415528	415528
28	Frame, Tube; Outer	2	415529	415529
29	Support, Rubber Frame	1	415315	415315
30	Rivet, Pop; Steel Plated	4	415311	415311
31	Bushing	4	415310	415310
32	Driver, Hex; Motor; Black Oxide	1	415518	415518
33	Housing, Motor; Painted	1	415526	415526
34	Housing, Inner Motor	1	415519	415519
35	Connector, Motor; Zinc Plated	1	465513	465513

MOTOR SERVICE AND MAINTENANCE INSTRUCTIONS

Wyco vibrator motors are designed to operate 50 to 100 hours between normal "preventive maintenance" intervals. The service instructions below should be followed if it becomes necessary to replace brushes, switch or cord.

NOTE: Use only factory authorized replacement parts.

Brush Replacement

Removal

A. Disconnect line cord (7) from power source.

B. Secure motor in upright position [switch (13) up] by clamping external portion of motor connector (35) in a bench vise.

C. Remove four plastic bolts (2) and lift off end cap (1).

D. Loosen the pan head screw (9) that holds brush retainer (16) by a 1/4 turn.

E. The brush spring will pop out. Carefully remove the brush (18) by gently pulling on the spring.

F. Repeat steps for the opposite side.

NOTE: If brushes are worn to 3/8" (9 mm) or less, they should be replaced.

Replacement

G. Align new brush (18) with brush holder (17) and insert.

NOTE: Avoid chipping brush edges when inserting.

NOTE: Ensure that milled slot on brush holder (17) mates with brush clamp (11) and longer end of brush holder (17) is toward armature (21).

H. Feed spring into brush holder (17), hold spring in place and reposition brush retainer (16). Tighten pan head screw (9) while holding brush retainer (16) firmly against brush holder (17).

I. Repeat steps for the opposite side.

J. Replace end cap (1) and four plastic bolts (2).

NOTE: Do not over tighten bolts!

Switch Replacement

Removal

A. Disconnect line cord (7) from power source.

B. Secure motor in upright position [Switch (13) up] by clamping hex portion of motor connector (35) in a vise.

C. Remove four plastic bolts (2) and lift off end cap (1).

NOTE: Vertical slot in threaded barrel of switch (13) is toward line cord (7).

D. Remove four screws that secure wire leads to switch (13) and remove it from inner motor housing (34).

NOTE: The switch terminals that each wire is connected to and the vertical slot in threaded barrel of switch (13) faces toward line cord (7).

Replacement

E. Position new switch (13) on mounting lugs on inner motor housing (34).

F. Note: Vertical slot in threaded barrel of switch (13) must be toward line cord (7) in order to have ON-OFF switch positions agree with marking on end cap (1).

G. Position each of the four wires to the same terminal location previously used.

H. Assemble four screws through lead terminals and tighten securely to switch (13).

I. Replace end cap (1) and four plastic bolts (2).

Power Cord Replacement

Removal

A. Disconnect line cord (7) from power source.

B. Secure motor in upright position [switch (13) up] by clamping hex portion of motor connector (35) in a vise.

C. Remove four plastic bolts (2) and lift off end cap (1).

D. Remove the two screws holding cord set (7) leads to switch (13).

E. Alternately loosen lock nuts (5) until they are flush with top of cord bracket (4).

NOTE: Do not remove nuts (5) from cord bracket (4).

F. Remove cord (7) from under cord clamp (3).

G. Note approximate position of rubber grommet (8) on old cord (7) and remove it for reuse.

Replacement

H. Position rubber grommet (8) on new cord (7) in approximate position to fit into grooves in inner motor housing (34).

I. Insert new cord (7) through open cord clamp (3).

J. Position cord (7) so the screw terminals on cord leads are aligned with screws and lead colors match the drawing.

K. Assemble two screws through lead terminals and tighten securely to switch (13) as shown.

L. Hold switch (13) firmly in position on inner motor housing (34) lugs. Firmly position cord (7) and rubber grommet (8) into their molded nests in the inner motor housing (34). Reposition rubber grommet (8), if necessary, to eliminate stretching or kinking of cord (7) between switch terminals and rubber grommet (8).

M. Hold cord (7) and grommet (8) firmly in place and alternately tighten the two lock nuts (5) until switch (13), cord (7), and

NOTE: Be sure cord clamp (3) is clamping outer jacket of cord (7) and not on the wire leads.

N. Replace end cap (1) and four plastic bolts (2).

MAJOR SERVICE INSTRUCTIONS

NOTE: The following service should only be performed at a factory authorized service center.

Field and Armature Replacement

Removal

A. Disconnect line cord (7) from power source.

B. Secure motor in upright position [switch (13) up] by clamping external portion of motor connector (35) in a bench vise.

C. Remove four plastic bolts (2) and lift off end cap (1).

D. Remove four pan head screws (9) and washers (10) from brush clamps (11) and field leads.

E. Remove brush retainers (16) brushes & springs (18) and brush holders (17).

F. Remove two field wires from switch (13).

NOTE: Only remove two screws that are on the opposite side of the switch from the power cord. These wires are from the field (20).

G. Remove four hex motor housing studs (6) from the inner motor housing (34).

H. Grasp inner motor housing (34) in one hand and rotate back and forth while pulling away from outer motor housing (33) and lift off.

I. Note: Armature should stay positioned in the outer motor housing (33) and loading spring should be put aside for later reassembly.

J. Now remove armature from outer motor housing (33).

K. With open end of inner motor housing (34) up, remove two slotted head screws (23) that secure field (20) & field sleeve (24) in motor housing (34).

NOTE: Do not loosen the nuts (19) on opposite side of housing (34) as they will drop out of position in housing (34) when screws(23) are removed.

L. Lift field sleeve (24) and field (20) out of inner motor housing (34) guiding field lead terminals through holes in inner motor housing (34).

Replacement

NOTE: Before inserting new field (20) into inner motor housing (34) press insulation away from screw holes on side with field leads to be sure that insulation does not interfere with mounting of field (20) in inner motor housing (34).

M. Install new field (20) in inner motor housing (34) with four lead wires entering first. Field (20) to be in position to permit the two colored leads to enter directly into the two clearance holes in inner motor housing (34). Position all lead wires in their proper locations as shown.

N. Align holes in field (20) with holes in inner motor housing (34). Install field sleeve (24) and align holes. Insert two screws (23) with lock washers (22) into field sleeve (24).

O. Put the nuts (19) in position in housing (34) and tighten down the screws (23).

P. With open end of inner motor housing (34) and field sleeve assembly in the up position carefully install the loading spring (14) into the bearing bore.

Q. With housing (34) in, replace outer motor housing (33).

NOTE: Armature (21) has already been positioned in the outer motor housing (33). Also the motor connector (35) should be installed on armature and rotated until screw holes are aligned.

R. Install four motor housing Studs (6) and tighten evenly.

S. With motor unit positioned with switch up, install brush holders (17).

NOTE: Each brush holder has a slot on one flat side, this slot is to be facing up and centered on the screw holes at each side of the brush holder slot. Press the brush holder (17) down firmly in slot.

T. Position brush clamps (11) [clamps to fit in slot in brush holder (17)] and brush retainers (16) over screw holes in motor housing (34). Install screws (9) and washers (10) to brush retainer side brush clamps (11). Do not tighten.

U. Position field leads (20) as shown, to other side of brush clamps (11) and install screws (9) and lock washers (10) tighten securely.

V. Insert brushes and springs (18) into brush holders (17) and swing brush retainers (16) into position to hold spring inside brush holder (17) then tighten securely.

W. Position switch leads (13) and install two slotted head screws in the switch (13) and tighten.

X. Replace the cover (1) Note: Replace filter (12) if dirty.

Y. Replace four plastic hex bolts (2).

NOTE: Do not over tighten bolts (2).

Frame Tubes Replacement

Removal

The "pop" rivet (30) can be removed only by drilling through the head of the rivet. Removing the head permits pushing the body of the rivet through the hole. A 7/32" diameter drill or larger will remove the head. Caution should be exercised that you drill only deep enough to remove the head of the rivet. With rivet (30) pushed into handles (27) (28) withdraw inner frame tube (27) from outer frame tube (28). Then remove outer frame tube (28) from frame tube support (29).

Replacement

Insert new outer frame tube (28) into frame tube support (29). Then insert inner frame tube (27) into outer frame tube (28). Position frame tubes (27) (28) so that all holes are aligned. Be sure the bushing (31) is in position shown before riveting.

NOTE: Be sure to assemble frames with continuous loop.

ASSEMBLY DRAWINGS

Marking on End Cap	Square Size	Assembly Part #
D	13/16"	877520
EH	1"	877526
1.38B	1-3/8"	878533

Marking on End Cap	Square Size	Assembly Part #
1.75B	1-3/4"	878540
2.00B	2"	878563
2.25B	2-1/4"	878568

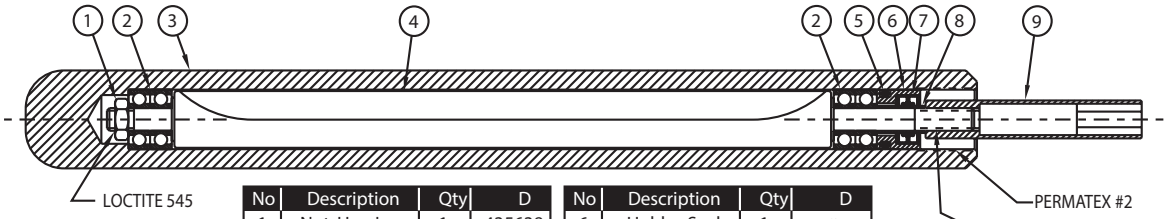

No	Description	Qty	D
1	Nut, Hex Jam	1	435638
2	Bearing, Ball	4	097011
3	Housing, Square	1	587320
4	Rotor	1	717340
5	O-Ring, Buna	1	*

No	Description	Qty	D
6	Holder, Seal	1	*
7	Seal, Oil	2	*
8	Bushing	1	*
9	Driver, Hex	1	382428

*All of these items are available assembled in kit #747540.

No	Description	Qty	EH
1	Nut, Hex Jam	1	432710
2	Bearing, Ball	4	097012
3	Housing, Square	1	587325
4	Rotor	1	717345
5	Seal, Oil	2	**

No	Description	Qty	EH
6	Bushing	1	177325
7	End Cap	1	**
8	Driver, Hex	1	384447

**End Cap Assy with seals is Part #207248. (Order bushing separately).

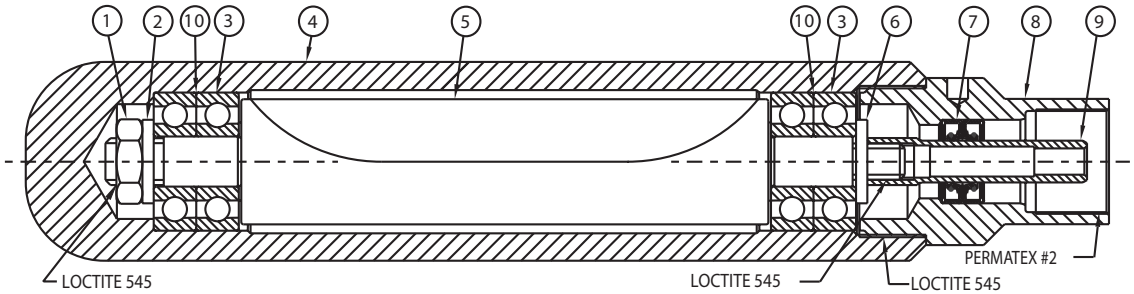

No	Description	Qty	1.38B	1.75B	2.00B	2.25B
1	Nut, Hex Jam	1	432708		432707	
2	Washer, Flat	1	887015		887011	
3	Bearing, Ball	4	096013	096010	096011	096020
4	Housing, Square	1	588331	588339	588354	588368
5	Rotor	1	718357	718335	717360	718365

No	Description	Qty	1.38B	1.75B	2.00B	2.25B
6	Washer, Flat	1	887015		887016	
7	Seal, Oil	2	***			
8	End Cap	1	***			
9	Driver, Hex	1	384446			
10	Shim	2	419701		N/A	

***Manufacturer suggests using end cap with pressed in seals (1.38B - #208231) (1.75B - #208236) (2.00B - #208261) (2.25B - #2082 68). However seal and end cap are available separately upon request.

Trademarks appearing in this document are the property of their respective entities.
Due to continuous research, product improvements and enhancements, Badger Meter reserves the right to change product or system specifications without notice, except to the extent an outstanding contractual obligation exists. © 2015 Badger Meter, Inc. All rights reserved.

wycosales@wycotool.com | www.wycotool.com

Phone: 262-639-6770 | Fax: 262-639-2023