Preso®
Differential Pressure Flow Meters

Ellipse® Pitot Tube Meter

Annular Flanged Steam Flow Meter

DESCRIPTION

The Preso ELLIPSE® Annular Flanged Steam Flow Meter is a multi-ported, self averaging differential pressure flow element for steam applications. The Ellipse flow meter is designed with a series of ports facing the upstream velocity pressures and flow sensing ports strategically located ahead of the trailing edge flow separation.

CONFIGURATION

The flow element has a two-piece construction: an elliptical shape and two 100% independent flow sensing chambers. This construction prevents signal degradation and mixing, and does not require dampening hardware or software. The impact velocity sensing holes (high pressure) are located along the leading edge and the true static sensing holes (low pressure) are on the exterior probe side. This does not generate any vortices or vacuum effects that impinge on the static pressure measurement sensing area and has a drag coefficient of 0.32 or less. Each flow sensor is complete with instrument shutoff valves with provisions to accept a transmitter or direct indicating meter. An identification tag is supplied with specific flow station measurement information, as required.

COMPONENTS

All sensors are furnished with 1/2 in. instrument gate valves (with proper class rating), threaded cross tees, flanged mounting hardware (with proper class rating), and ID tag as standard equipment. Available options include integral 3-valve or 5-valve transmitter mount manifold and integral RTD temperature sensor.

FEATURES

- Patented elliptical design
- Single point pipe entry for DP, temperature and static pressure
- No dampening software required
- Low pressure loss (typically 3% of DP in a 12 in. (304 mm) line) due to the patented aerodynamic profile
- NIST traceable calibration, optional independent labs
- Accuracy: ±0.75% of reading, repeatability: ±0.1% of reading
- Turndown Ratio: 17:1; no vacuum effects
- No moving part construction provides long, trouble-free service life
- True static pressure measurement rather than a calculated value
- Overcomes loss of accuracy caused by fluid separation at the sensor body

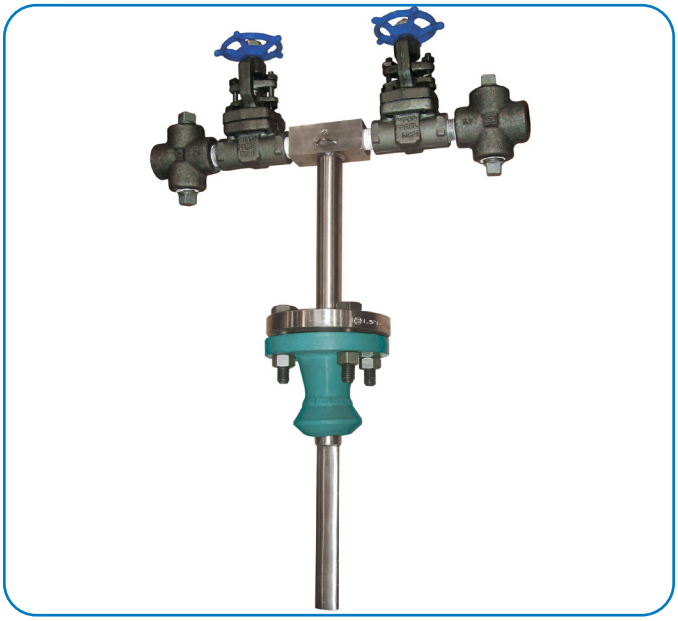

MAXIMUM ALLOWABLE DP (INCHES OF WATER COLUMN)

Pipe Size	Single Support Probe Size (in.)			Double Support Probe Size (in.)		
	7/8	1-1/4	2-1/4	7/8	1-1/4	2-1/4
2 in. (50.80 mm)	880	—	—	2380	—	—
2-1/2 in. (63.50 mm)	525	—	—	1558	—	—
3 in. (76.20 mm)	396	—	—	1283	—	—
3-1/2 in. (88.90 mm)	283	—	—	1117	—	—
4 in. (101.60 mm)	197	—	—	980	—	—
5 in. (127.00 mm)	153	—	—	757	—	—
6 in. (152.40 mm)	126	—	—	669	—	—
8 in. (203.20 mm)	114	360	—	512	—	—
10 in. (254.80 mm)	100	240	779	315	960	—
12 in. (304.80 mm)	87	175	660	250	700	—
14 in. (355.60 mm)	53	147	610	195	585	—
16 in. (406.40 mm)	—	113	495	—	450	—
18 in. (457.20 mm)	—	90	410	—	360	—
20 in. (508.00 mm)	—	74	346	—	295	—
24 in. (609.60 mm)	—	68	315	—	270	952
26 in. (660.40 mm)	—	50	218	—	215	878
30 in. (762.00 mm)	—	34	187	—	155	780
32 in. (812.80 mm)	—	—	136	—	—	550
36 in. (914.40 mm)	—	—	105	—	—	410
42 in. (1066.80 mm)	—	—	85	—	—	350

Badger Meter

PTT-DS-00778-EN-05 (August2021)

Product Data Sheet

SPECIFICATIONS

Applications	Steam
Pipe Size	2…48 in. (50…1220 mm)
Pressure	Vary per flange ratings
Temperature	Vary per flange ratings
Accuracy	±0.75% of reading
Repeatability	±0.1%
Turndown Ratio	17:1 with no vacuum effect
Reynolds Number	>75,000: Maintains most accurate flow measurements <75,000: Consult factory for estimated results
Resonance	If greater than 0.8, use double support per ASME PTC 19.3

STANDARD COMPONENTS

Component	**Specifications**
Head	T-type
Connection	316 SS 1/2 in. FNPT
Compression Fitting	CS with SS ferrule
Weld Fitting	CS 3000 lb. — ASTM A105
Ellipse Sensor	316/316L SS
ID Tag	SS with wire

DIMENSIONS

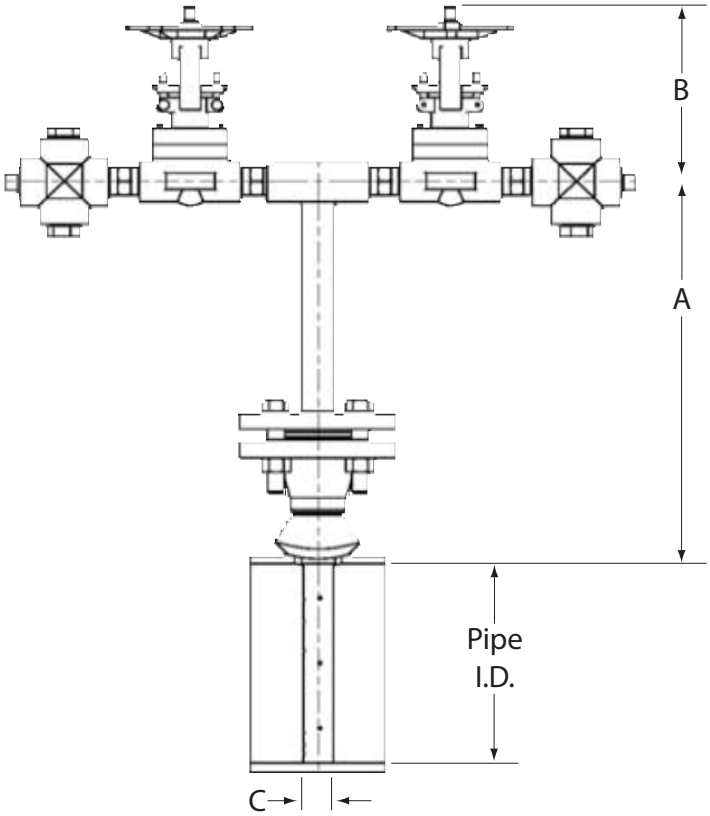

	Probe Length		**Probe Width**
	A	**B**	**C**
ASF	11.63 in. (295.40 mm)	5.25 in. (133.35 mm)	0.87 in. (22.23 mm)
ASF1	11.63 in. (295.40 mm)	5.25 in. (133.35 mm)	1.25 in. (31.75 mm)
ASF2*	10.00 in. (254 mm)	5.25 in. (133.35 mm)	2.25 in. (57.15 mm)

ASF2 probe design not pictured. Contact factory for more information.

PART NUMBER CONSTRUCTION

Ellipse®
Annular Flanged Steam
7/8 in. DIAMETER

PASF - [ ][ ][ ][ ][ ][ ][ ][ ][ ]

PIPE SIZE

2 in.	A
2-1/2 in.	B
3 in.	C
3-1/2 in.	D
4 in.	E
5 in.	F
6 in.	G
8 in.	H
10 in.	I
12 in.	J
14 in.	K

SCHEDULE

STD	A
20	B
30	C
40	D
60	E
80	F
100	G
120	H
140	I
160	J
XH	K
XXH	L
5S	M
10S	N
40S	O
80S	P

PIPE ORIENTATION

Horizontal	A
Vertical	B

PROBE MATERIAL

316/316L SS	1
Monel®	2
Inconel®	3
Hastelloy®	4
Other	X

INSTRUMENT CONNECTION

1/2 in. NPT	A
1/2 in. Socket	B
TT3 (Integral 3-Valve Trans Mount - Max Temp 225° F)	C
TT5 (Integral 5-Valve Trans Mount - Max Temp 225° F)	D
(RTD is not available with Integral 5-Valve Manifold. If RTD is required, select "E" Transmitter Flange Connection and the appropriate manifold valve under the Instrument Valve section below.)	
Transmitter Flange Connection	E

CONNECTION / FLANGE RATING

1-1/4 in. RF Flange 150# CS	A
1-1/4 in. RF Flange 300# CS	B
1-1/4 in. RF Flange 600# CS	C
1-1/4 in. RF Flange 900/1500# CS	D
1-1/4 in. RF Flange 150# SS	E
1-1/4 in. RF Flange 300# SS	F
1-1/4 in. RF Flange 600# SS	G
1-1/4 in. RF Flange 900/1500# SS	H

PIPE MOUNTING

A105 CS 3000#	1
316/316L SS 3000#	2
A105 CS 3000# w/Double Support	3
316/316L SS 3000# w/Double Support	4
Not Required	Z

INSTRUMENT VALVE

1/2 in. Gate CS w/Cross	A
1/2 in. Gate SS w/Cross	B
Not Required	Z
ONLY AVAILABLE WITH OPTION "E" UNDER INSTRUMENT CONNECTION	
Flg x Flg 3-Valve Manifold CS - Max Temp 225° F	E
Flg x Flg 3-Valve Manifold SS - Max Temp 225° F	F
Flg x Flg 5-Valve Manifold CS - Max Temp 225° F	G
Flg x Flg 5-Valve Manifold SS - Max Temp 225° F	H
Customer Supplied Valve Manifold	I

RTD (Max Temp 480° F, consult factory for higher temp options)

100 Ohm RTD 3-Wire w/Explosion Proof Head	1
100 Ohm RTD 3-Wire, Integral w/Aluminum Head	2
Not Required	Z

Stainless Steel ID Tag supplied as standard.
Tag information must be included with order.

NOTE: Make sure that DP and Resonance are withing acceptable limits. (See chart in the Ellipse Brochure)

Ellipse®
Annular Flanged Steam
1-1/4 in. DIAMETER

PASF1 - [ ][ ][ ][ ][ ][ ][ ][ ][ ]

PIPE SIZE		
12 in.	J	
14 in.	K	
16 in.	L	
18 in.	M	
20 in.	N	
24 in.	O	
30 in.	P	
36 in.	Q	
42 in.	R	
48 in.	S	
SCHEDULE		
STD	A	
20	B	
30	C	
40	D	
60	E	
80	F	
100	G	
120	H	
140	I	
160	J	
XH	K	
XXH	L	
5S	M	
10S	N	
40S	O	
80S	P	
PIPE ORIENTATION		
Horizontal	A	
Vertical	B	
PROBE MATERIAL		
316/316L SS	1	
Monel®	2	
Inconel®	3	
Hastelloy®	4	
Other	X	
INSTRUMENT CONNECTION		
1/2 in. NPT	A	
1/2 in. Socket	B	
TT3 (Integral 3-Valve Trans Mount - Max Temp 225° F)	C	
TT5 (Integral 5-Valve Trans Mount - Max Temp 225° F)	D	
(RTD is not available with Integral 5-Valve Manifold. If RTD is required, select "E" Transmitter Flange Connection and the appropriate manifold valve under the Instrument Valve section below.)		
Transmitter Flange Connection	E	
CONNECTION / FLANGE RATING		
1-1/2 in. RF Flange 150# CS	A	
1-1/2 in. RF Flange 300# CS	B	
1-1/2 in. RF Flange 600# CS	C	
1-1/2 in. RF Flange 900/1500# CS	D	
1-1/2 in. RF Flange 150# SS	E	
1-1/2 in. RF Flange 300# SS	F	
1-1/2 in. RF Flange 600# SS	G	
1-1/2 in. RF Flange 900/1500# SS	H	
PIPE MOUNTING		
A105 CS 3000#	1	
316/316L SS 3000#	2	
A105 CS 3000# w/Double Support	3	
316/316L SS 3000# w/Double Support	4	
Not Required	Z	
INSTRUMENT VALVE		
1/2 in. Gate CS w/Cross	A	
1/2 in. Gate SS w/Cross	B	
Not Required	Z	
ONLY AVAILABLE WITH OPTION "E" UNDER INSTRUMENT CONNECTION		
Flg x Flg 3-Valve Manifold CS - Max Temp 225° F	E	
Flg x Flg 3-Valve Manifold SS - Max Temp 225° F	F	
Flg x Flg 5-Valve Manifold CS - Max Temp 225° F	G	
Flg x Flg 5-Valve Manifold SS - Max Temp 225° F	H	
Customer Supplied Valve Manifold	I	
RTD (Max Temp 480° F, consult factory for higher temp options)		
100 Ohm RTD 3-Wire w/Explosion Proof Head		1
100 Ohm RTD 3-Wire, Integral w/Aluminum Head		2
Not Required		Z

Stainless Steel ID Tag supplied as standard.
Tag information must be included with order.

NOTE: Make sure that DP and Resonance are withing acceptable limits. (See chart in the Ellipse Brochure)

Ellipse®
Annular Flanged Steam
2-1/4 in. DIAMETER

PASF2 - [ ][ ][ ][ ][ ][ ][ ][ ][ ]

PIPE SIZE	
12 in.	J
14 in.	K
16 in.	L
18 in.	M
20 in.	N
24 in.	O
30 in.	P
36 in.	Q
42 in.	R
48 in.	S
SCHEDULE	
STD	A
20	B
30	C
40	D
60	E
80	F
100	G
120	H
140	I
160	J
XH	K
XXH	L
5S	M
10S	N
40S	O
80S	P
PIPE ORIENTATION	
Horizontal	A
Vertical	B
PROBE MATERIAL	
316/316L SS	1
Monel®	2
Inconel®	3
Hastelloy®	4
Other	X
INSTRUMENT CONNECTION	
1/2 in. NPT	A
1/2 in. Socket	B
TT3 (Integral 3-Valve Trans Mount - Max Temp 225° F)	C
TT5 (Integral 5-Valve Trans Mount - Max Temp 225° F)	D
(RTD is not available with Integral 5-Valve Manifold. If RTD is required, select "E" Transmitter Flange Connection and the appropriate manifold valve under the Instrument Valve section below.)	
Transmitter Flange Connection	E
CONNECTION / FLANGE RATING	
3 in. RF Flange 150# CS	A
3 in. RF Flange 300# CS	B
3 in. RF Flange 600# CS	C
3 in. RF Flange 900/1500# CS	D
3 in. RF Flange 150# SS	E
3 in. RF Flange 300# SS	F
3 in. RF Flange 600# SS	G
3 in. RF Flange 900/1500# SS	H
PIPE MOUNTING	
A105 CS 3000#	1
316/316L SS 3000#	2
A105 CS 3000# w/Double Support	3
316/316L SS 3000# w/Double Support	4
Not Required	Z
INSTRUMENT VALVE	
1/2 in. Gate CS w/Cross	A
1/2 in. Gate SS w/Cross	B
Not Required	Z
ONLY AVAILABLE WITH OPTION "E" UNDER INSTRUMENT CONNECTION	
Flg x Flg 3-Valve Manifold CS - Max Temp 225° F	E
Flg x Flg 3-Valve Manifold SS - Max Temp 225° F	F
Flg x Flg 5-Valve Manifold CS - Max Temp 225° F	G
Flg x Flg 5-Valve Manifold SS - Max Temp 225° F	H
Customer Supplied Valve Manifold	I
RTD (Max Temp 480° F, consult factory for higher temp options)	
100 Ohm RTD 3-Wire w/Explosion Proof Head	1
100 Ohm RTD 3-Wire, Integral w/Aluminum Head	2
Not Required	Z

Stainless Steel ID Tag supplied as standard.
Tag information must be included with order.

NOTE: Make sure that DP and Resonance are withing acceptable limits. (See chart in the Ellipse Brochure)

INTENTIONAL BLANK PAGE

INTENTIONAL BLANK PAGE

Control. Manage. Optimize.

Preso and Ellipse are registered trademarks of Badger Meter, Inc. Other trademarks appearing in this document are the property of their respective entities. Due to continuous research, product improvements and enhancements, Badger Meter reserves the right to change product or system specifications without notice, except to the extent an outstanding contractual obligation exists. © 2021 Badger Meter, Inc. All rights reserved.

www.badgermeter.com