Integrated Flow Computer IFC15L

Extended Range Fluid Compensation Flow Meter Interface

DESCRIPTION

The IFC15L is the ultimate electronic processor, providing total compensation to enhance flow meter accuracy, while extending the linear flow range. This compact design has dual rotor frequency inputs, and temperature inputs for single or dual rotor turbine flow meters. The IFC15L tracks all variables to compensate for viscous and inertial effects due to fluid temperature. Our enhanced DSP technology allows exceptional signal characterization and fast response to output data in engineering units. Meeting the demanding requirements of the aerospace, automotive, process control and test and measurement industries, the IFC15L provides significant improvements in flow meter accuracy under extreme temperature conditions.

FEATURES

- Conformance to SAE ARP 4990 temperature calculations
- Less than 1 mS response
- Blade averaging to enhance low flow resolution
- Integral temperature amplifier
- Multiple outputs (freq, analog, RS485)
- Roshko and Strouhal correlation, using 16-bit resolution
- Configurable interface software allows fluid selection and configuration of outputs

BENEFITS

- Improved flow measurement accuracy and range
- Dynamic response, with fully compensated output
- Easy interface to DAQ System
- One device for multiple signals
- No external amplifiers or signal conditioners necessary

APPLICATIONS

- Engine test cells and test stands
- Precision monitoring
- On-board automotive and aerospace testing
- Control loop
- Custody transfer

OPTIONS

- Rate and total display
- Imbedded or remote mounting
- OEM flight and commercial designs

Figure 1: IFC15L "N" type enclosure mounted on a dual rotor turbine flow meter

Figure 2: IFC15L "X" type enclosure mounted on a dual rotor turbine flow meter

SOFTWARE INTERFACE

IFC15L software graphical user interface is intuitively easy and allows powerful characterization of the process signals, output signals and liquid properties.

Provides:

- Identification and comments
- Input linearization
- Output characterization
- Instantaneous data
- Liquid properties
- Data logging
- Configuration and service history
- Stores and recalls configuration software compatible with Windows 7 or 10

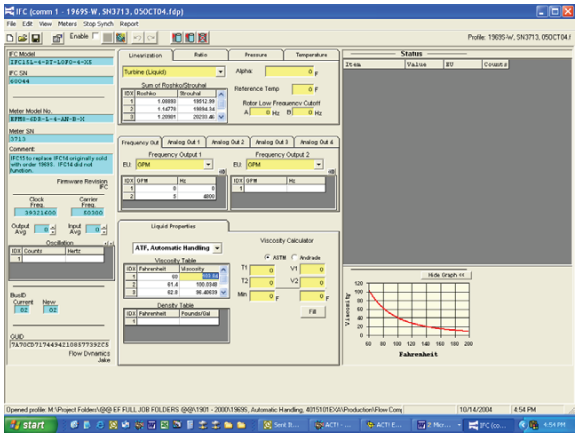

Figure 3: IFC15L software graphical user interface

Badger Meter

CXX-DS-02468-EN-04 (February 2022)

Product Data Sheet

CONNECTIONS

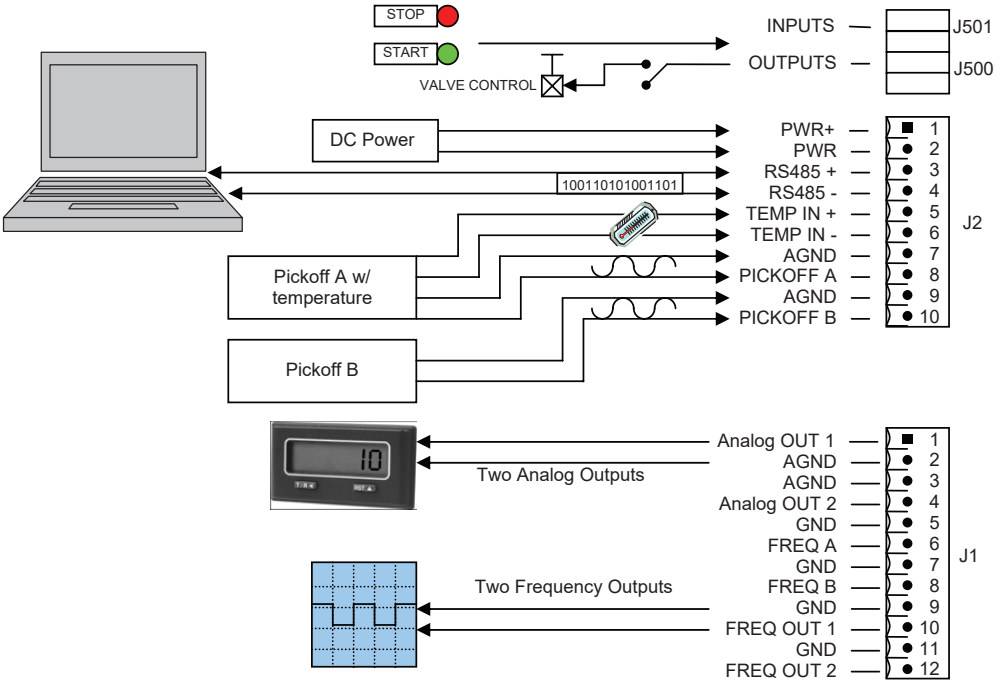

Figure 4: IFC15L connections

ORDERING MATRIX

IFC15L - 4 - RT - 0000 4 – N – XXX

Power
4 = DC Power

Flow Meter Input
R = RF, 10 Ohm, 1 mH Coil
O = 0 . . . 5V DC TTL Pulse

Temperature Input
T = 10K Ohm Thermistor
V = Voltage 0 . . . 10V DC
L = Voltage 0 . . . 5V DC
C = Current 4…20 mA

Frequency 1 and 2 Outputs
L = Linearized Flow Rate Out
S = Summed Raw Frequency
T = Flow Total Out
U = Temperature Out
0 = Not Used

Special Code
Blank = Standard Configuration

Enclosure
N = NEMA 4 Aluminum
X = NEMA 4 SP WET LOC. Aluminum
C = NEMA 4X, MS Connectors
CD = NEMA 4X, MS Connectors, Display
R = Remote NEMA 4x, Integral Cables
RD = Remote NEMA 4x, Integral Cables, Display

Communications
4 = RS485, ASCII Protocol

Analog 1 and 2 Outputs
F = 0 . . . 5V DC Linearlized Flow Rate Out
G = 0 . . . 10V DC Linearized Flow Rate Out
M = 4 . . . 20 mA Linearized Flow Rate Out
T = 0 . . . 5V DC Temperature Out
U = 0 . . . 10V DC Temperature Out
V = 4 . . . 20 mA Temperature Out
0 = Not Used

SPECIFICATIONS

Input Power	24V DC nominal	15…32V DC, 0.120 amps maximum, (excluding 4…20 mA)	
	Note: 18…32V DC power required for analog output		
Flow Meter Input Type	Pulse TTL	Frequency range	1 Hz…5 kHz
		Impedance	5.8 Ω…5V DC
	RF Carrier	Frequency range	5 Hz…3 kHz
		Inductance	1 mH
		Oscillator frequency	Adjustable 55…65 kHz
Temperature Input Type	Thermistor	10 kΩ	
	Current	4…20 mA	
	Voltage	0…10V DC or 0…5V DC	
Linearization	Flow meter K-factor	Number of points	2…200
		Interpolation method	Linear
		Correlation	Strouhal-Roshko (per ARP4990 publication)
	Temperature	Number of points	2…50
		Interpolation method	Linear
	Viscosity	Number of points	2…100
		Interpolation method	Linear
		Correlation	ASTM D341-93, Andrades Equation or user-defined
	Density	Number of points	2…50
		Interpolation method	Linear
Outputs	Variables available for output	Linearized volume flow rate	
		Linearized mass flow rate	
		Flow total	
		Temperature	
	Frequency (2 frequency output channels)	0…5 V TTL, 0.6…16,000 Hz	
		Transmission distance	250 ft maximum
	Analog (2 analog output channels)	0…5V DC, 0…10V DC or 4…20 mA	
		Voltage	Linearized, scaled
		Zero offset	Less than 5 m
		Current	Linearized, scaled
		Maximum load	500 Ω max. load resistance (4…20 mA)
Performance	Accuracy	Linearized frequency	0.1% of reading
		Linearized analog	0.1% of full scale
		Thermistor	±0.5° C (does not include sensor uncertainty)
		Analog input (temperature)	16 bit A/D resolution
	Linearization latency	0.8…2.0 ms + period of input	
Environment	Temperature	Operating	–40…185° F (–40…85° C)
		Storage	–67…257° F (–55…125° C)
	Humidity	0…85% RH non-condensing	
	Enclosure	NEMA 4 or NEMA 4 CLI GR.CD CL II GR.EFG CL.III WET LOC. Aluminum	
Communication	Interface	RS485, serial USART connection to personal computer (with serial cable)	
	Baud	Output	115K
		Programming	115K
		Data Bits	8
		Stop Bit	1
		Parity	None

Control. Manage. Optimize.

Cox Instruments is a registered trademark of Badger Meter, Inc. Other trademarks appearing in this document are the property of their respective entities. Due to continuous research, product improvements and enhancements, Badger Meter reserves the right to change product or system specifications without notice, except to the extent an outstanding contractual obligation exists. © 2022 Badger Meter, Inc. All rights reserved.

www.badgermeter.com