Badger Meter

MDS2000

Oil management system

FMS-UM-03441-EN-01 (March 2021)

Installation and Software manual

CONTENT

1. Installation manual 1
1.1 Safety features 1
1.2 Schemas 2
1.2.1 Cable requirements 2
1.2.2 Oil installation 3
1.2.3 Connections for the junction box 4
1.2.4 Connections for the printer, the network & the internal PC card 5
1.2.5 Connections for the external PC card 6
1.2.6 Connections for the keypad 7
1.2.7 Change of the address of the display 8
1.2.8 Connections for the solenoids 9
1.2.9 Connections for the power and single pulse transmitters 10
1.2.10 Connections for the power and dual channel pulse transmitters 11
1.2.11 I/O card connectors 12
1.3 Cabling 13
1.3.1 The network 13
1.3.2 The power 14
1.3.3 The terminal links 15
1.3.4 The solenoid valves 15
1.3.5 The pulse transmitters 16
1.3.6 The printer cable 16
1.4 Network 17
1.4.1 Installation procedure 17
1.4.2 Logic structure of the MDS network 17
1.4.3 How does the network work? 18
1.4.4 Level 1 18
1.4.5 Level 2 18
1.4.6 Level 3 19
1.5 Troubleshooting 20
1.5.1 Communication problems 20
1.5.2 Problems with the display 21
1.5.3 Problems with the solenoid valves 21

1.5.4 Problems with the pulse transmitters 21
1.5.5 Problems with the printers 22
1.5.6 Problems with the PC software / interface 22
1.5.7 Explanations for the transaction end codes printed on each transaction ticket 22
1.5.8 Procedure to change the battery 22
2. Software manual 23
2.1 Program license agreement 23
2.2 PC card upgrade 23
2.2.1 Introduction 23
2.2.2 About the PC interface card 23
2.2.3 PC card installation 23
2.2.4 PC minimum requirements 24
2.2.5 MDS 2000 requirements 24
2.2.6 PC card hardware installation 24
2.2.7 PC card software installation 25
2.2.8 Running the software 25
2.3 Using the software 26
2.3.1 Configuration button 26
2.3.2 Display button 30
2.3.3 Report button 31
2.3.4 Dispense button 32
2.3.5 Exit button 33
2.4 Export file possibilities 33
2.4.1 Two possibilities are available 33
2.4.2 Transaction to disk option 33
2.5 Backup - restore or Archive Database 35

1. INSTALLATION MANUAL

1.1 Safety features

1. Before installing or using this product, please read the instruction manual thoroughly.
2. Unpacking: Please check that the product is complete and free from any damage (check with the further packing list).
3. Only qualified individual should install and/or repair this product.
4. Unplug the MDS 2000 from the electrical outlet before you clean it. Use a clamp cloth for cleaning and do not use liquid or aerosol cleaners.
5. Do not place the MDS 2000 on an unstable surface that may allow the unit to fall.
6. Never place the MDS 2000 near or over a radiator or heat register.
7. Use the type of power source indicated on the label (AC power). If you are not sure of the type of power available, consult your supplier or local electric company.
8. The MDS 2000 must be equipped with a plug having a third (grounding) pin, which fits only into a grounding-type outlet. This is a safety feature. The MDS 2000 should not be used without a properly grounded outlet. Failure to properly ground the MDS 2000 may cause damage to the unit or the data stored.
9. Do not put the MDS 2000 where the cord will be walked on.
10. An extension cord is not recommended for use with the MDS 2000. If you use an extension cord, make sure that the total of the ampere ratings on the products plugged into the extension cord does not exceed the extension cord's ampere rating. Also, make sure that the total of all products plugged into the wall outlet does not exceed 15 amperes.
11. Unplug the MDS 2000 from the wall outlet and have it repaired by a qualified service person under the following conditions:

    a) When the power cord or plug is damaged or frayed.
    b) If liquid has been spilled into it.
    c) If it has been exposed to rain or water.
    d) If it does not operate normally when the operating instructions are followed. Adjust only those controls that are covered by the operating instructions since improper adjustment of other controls may result in damage and loss of data.
    e) If it has been dropped or damaged.
    f) If it exhibits a distinct change in performance, indicating a need for service.

WARNING ***FAILURE TO ADHERE TO THESE SAFETY INSTRUCTIONS MAY RESULT IN SERIOUS BODILY INJURY.***

1.2 Schemas

1.2.1 CABLE REQUIREMENTS

18 Volts DC power cable		2 Core + earth 0.75 mm^2
Network cable		Type 1 twisted pair screened Apple Talk 9999 Belden or Belden 8451, or Alpha 24561 or equivalent
Terminal cable		Type 2 twisted pair screened by pair, Belden 9723 or equivalent
Pulse transmitter cable		Type 1 twisted pair screened
Solenoid cable		2 core + earth 0.75 mm^2
Printer cable		Type 3 core screened (or higher)

Suggestion:

For small and medium installations, we suggest to use the same cable for:

- 24 VDC + network
- Terminal cable
- Pulse transmitter (18690) + solenoid

type 2 twisted pair 0.75mm^2 min. shielded by pair (capacitance $\leq$ 65 pF/m), Belden 1474 or equivalent.

1.2.2 OIL INSTALLATION

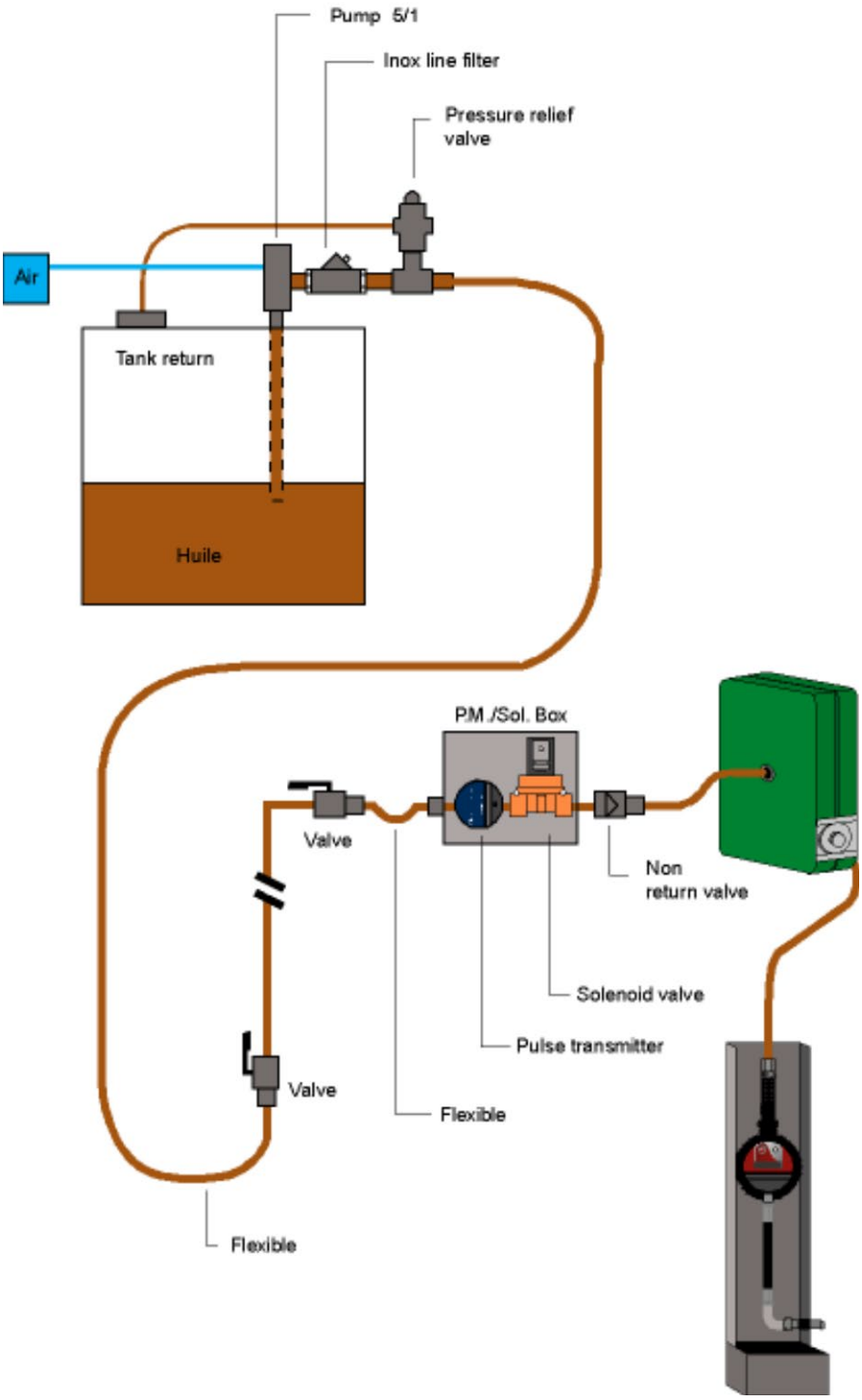

1.2.3 CONNECTIONS FOR THE JUNCTION BOX

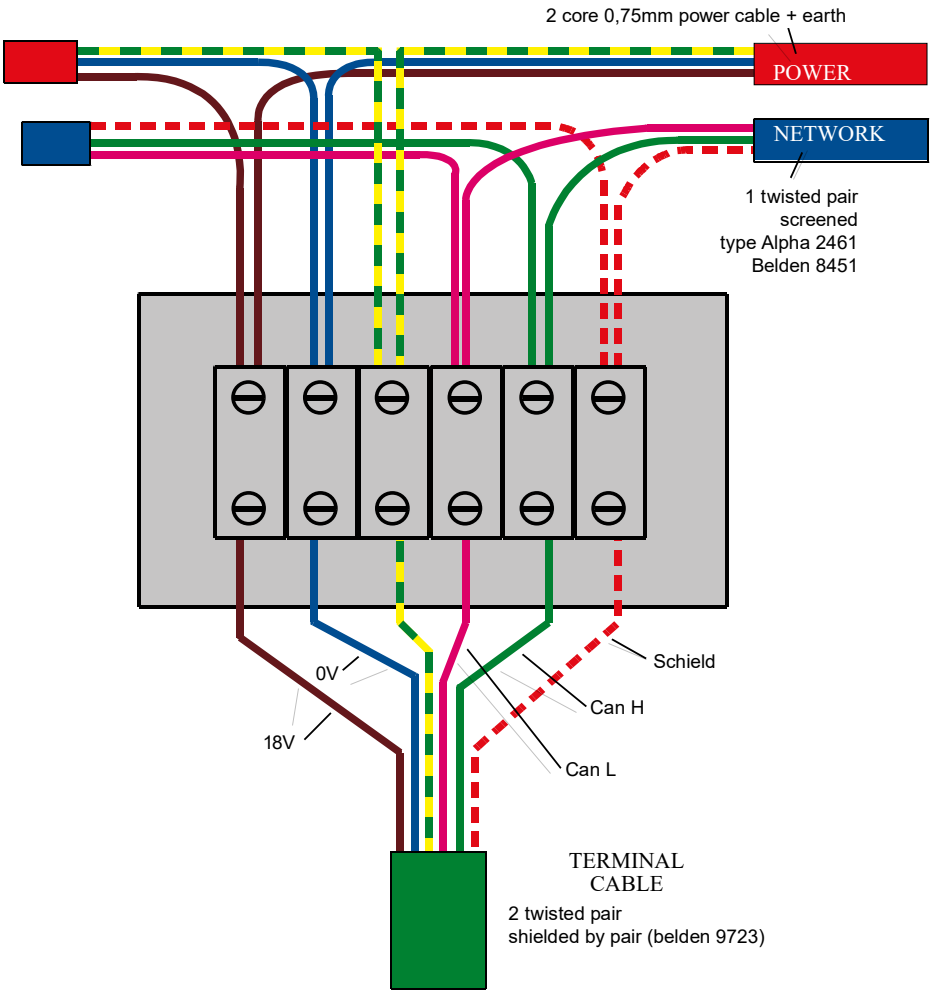

1.2.4 CONNECTIONS FOR THE PRINTER, THE NETWORK & THE INTERNAL PC CARD

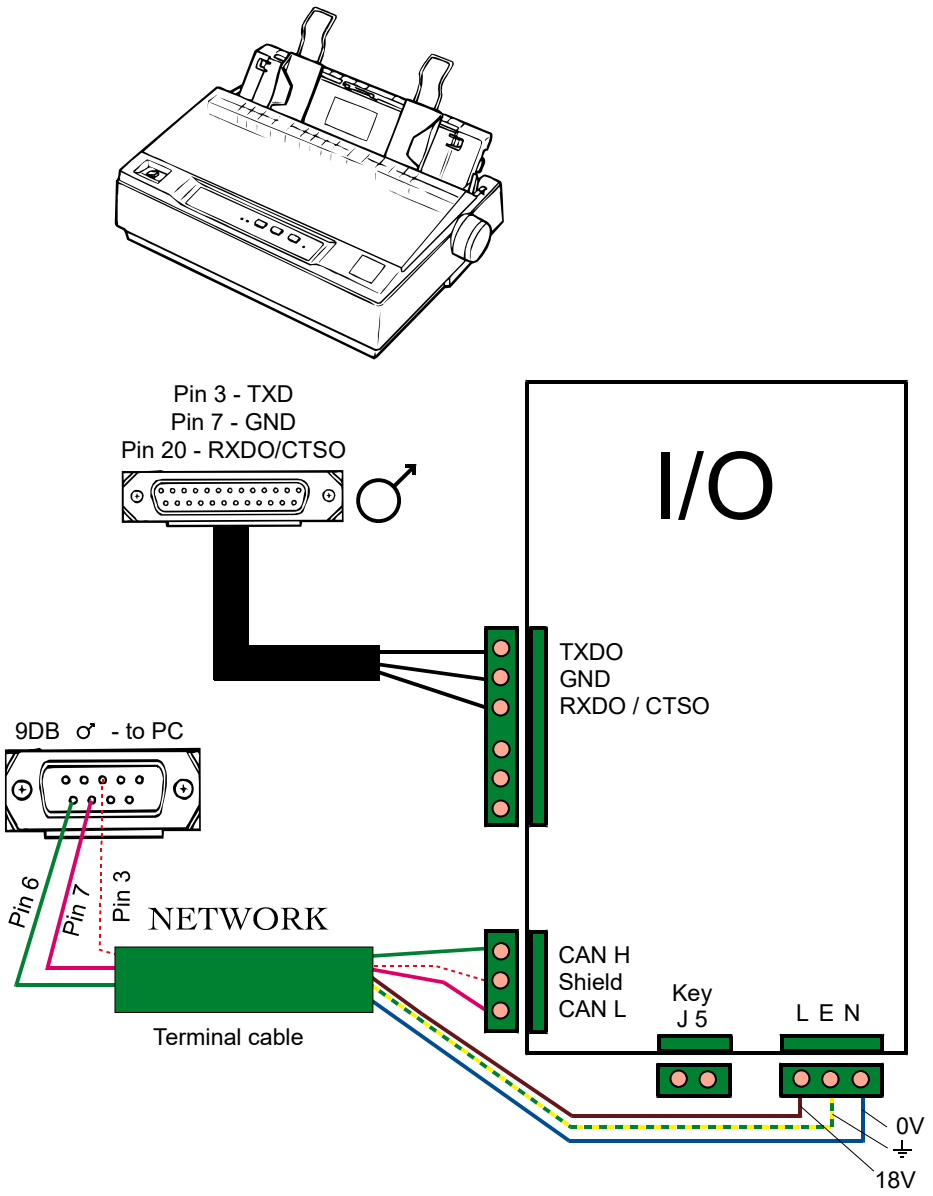

1.2.5 CONNECTIONS FOR THE EXTERNAL PC CARD

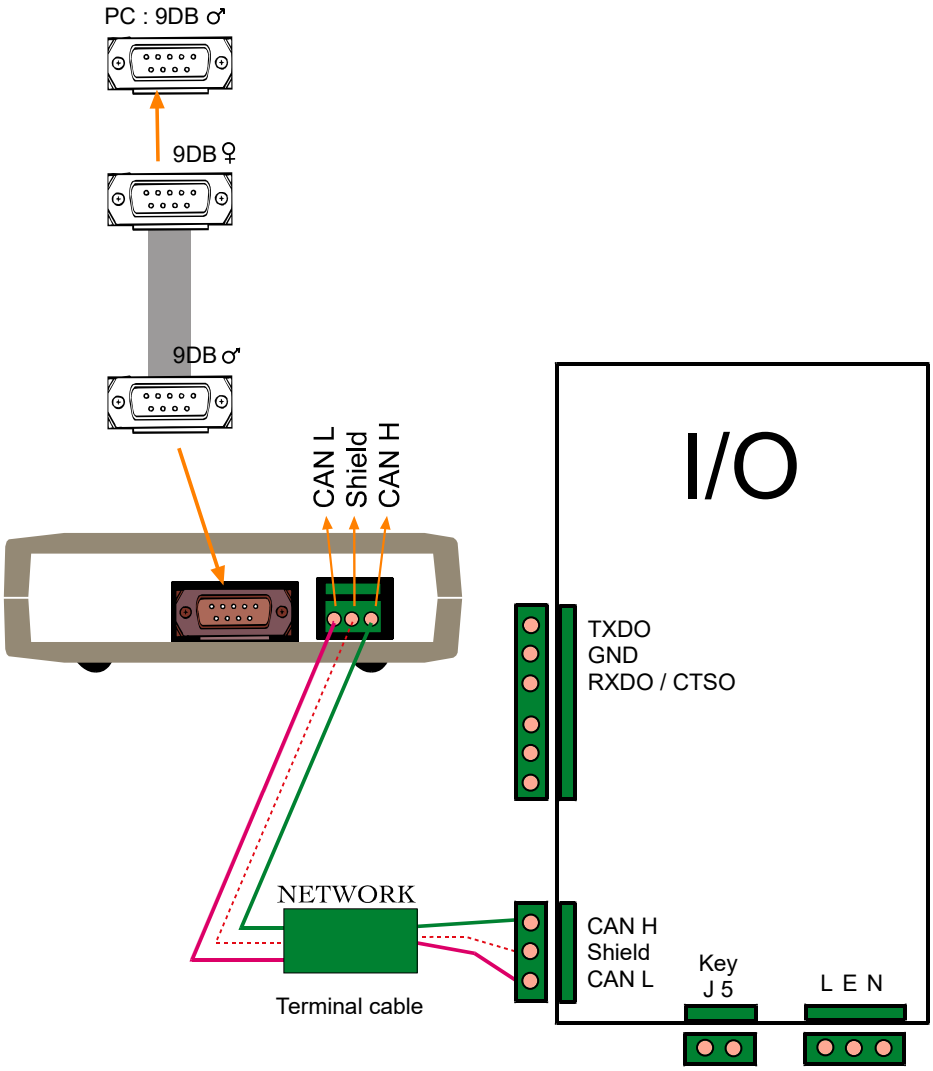

1.2.6 CONNECTIONS FOR THE KEYPAD

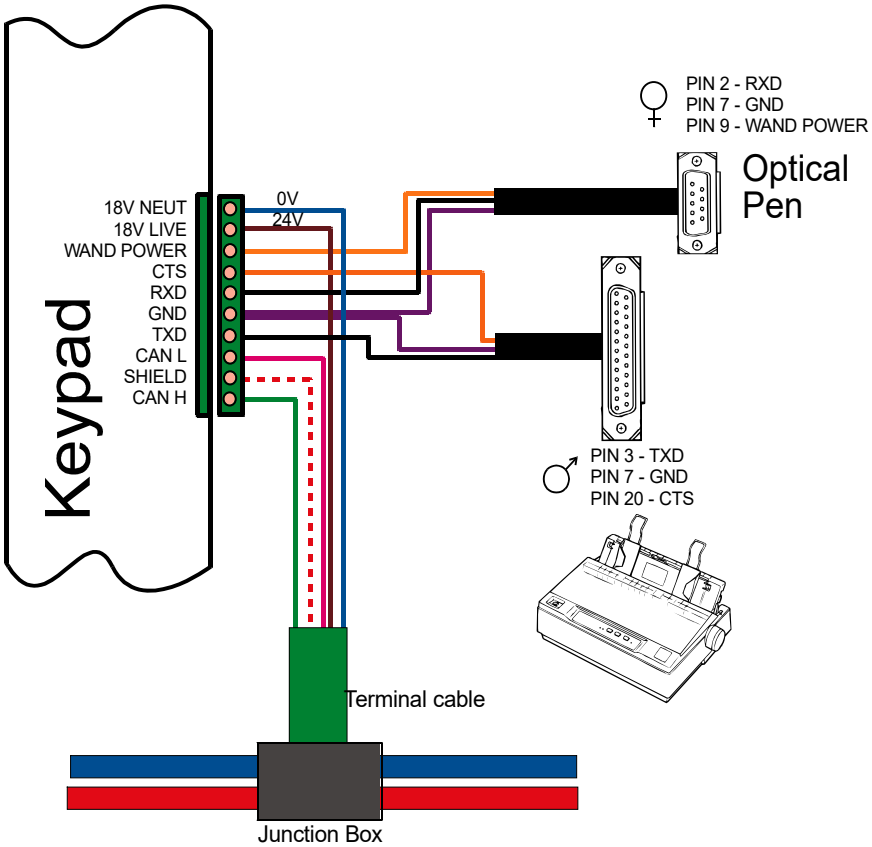

1.2.7 CHANGE OF THE ADDRESS OF THE DISPLAY

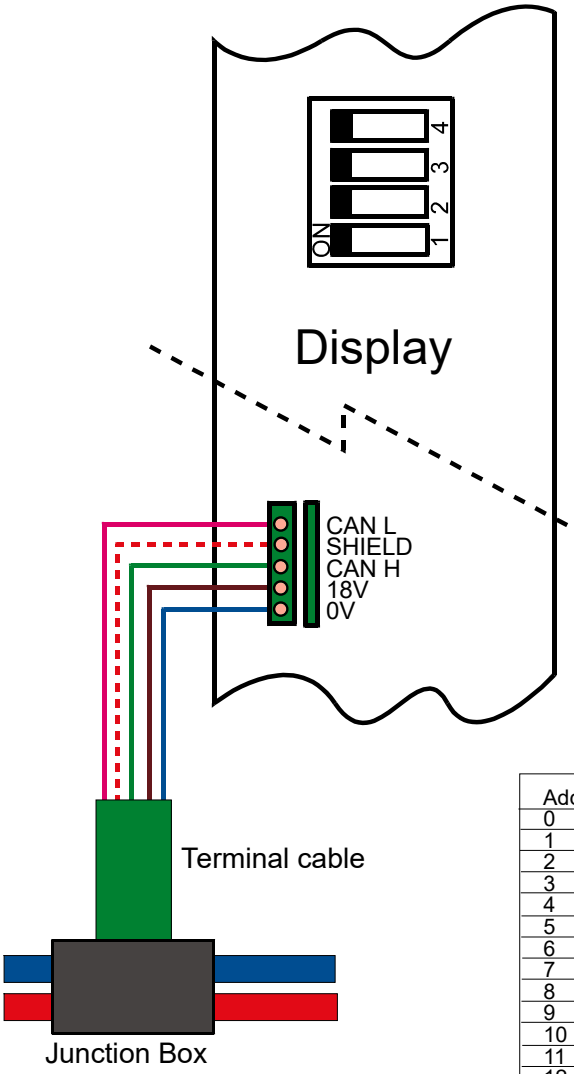

Addr.	SW1	SW2	SW3	SW4
0	ON	ON	ON	ON
1	OFF	ON	ON	ON
2	ON	OFF	ON	ON
3	OFF	OFF	ON	ON
4	ON	ON	OFF	ON
5	OFF	ON	OFF	ON
6	ON	OFF	OFF	ON
7	OFF	OFF	OFF	ON
8	ON	ON	ON	OFF
9	OFF	ON	ON	OFF
10	ON	OFF	ON	OFF
11	OFF	OFF	ON	OFF
12	ON	ON	OFF	OFF
13	OFF	ON	OFF	OFF
14	ON	OFF	OFF	OFF
15	OFF	OFF	OFF	OFF

1.2.8 CONNECTIONS FOR THE SOLENOIDS

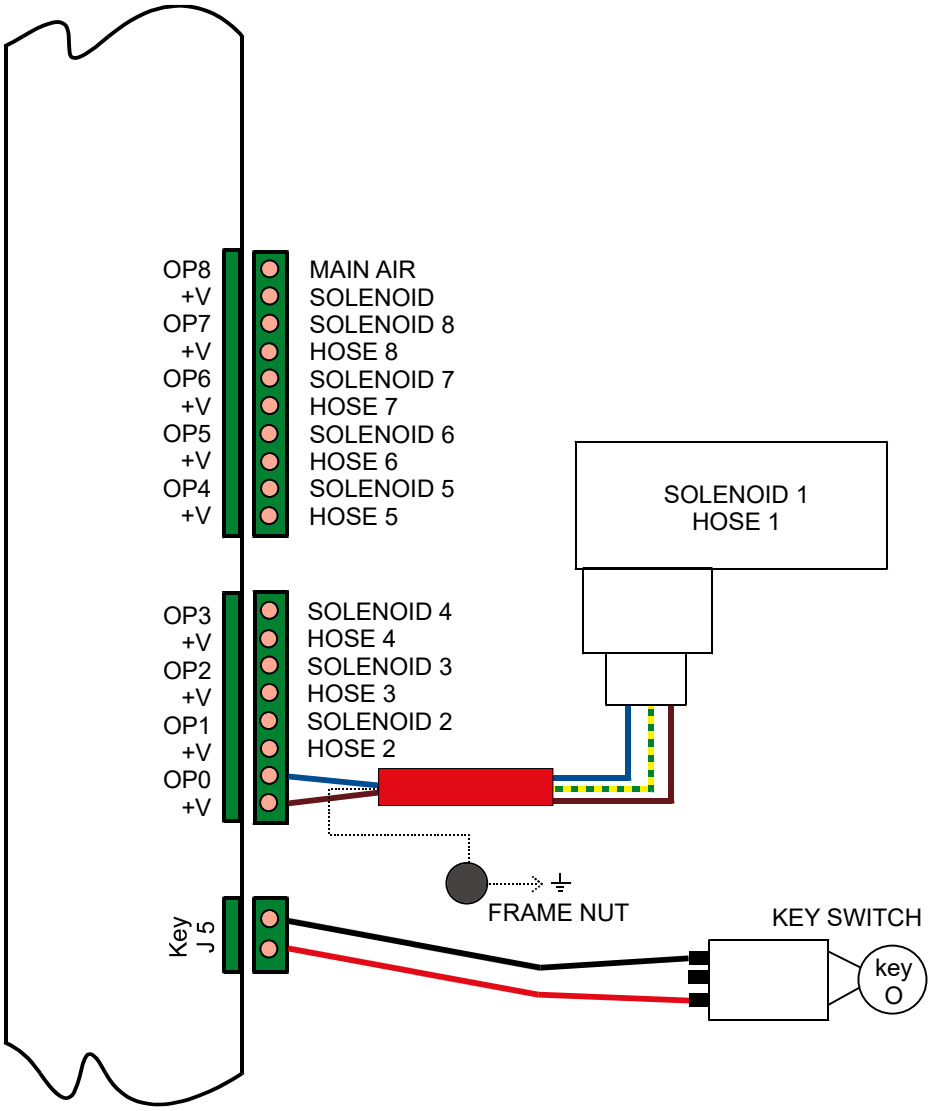

1.2.9 CONNECTIONS FOR THE POWER AND SINGLE PULSE TRANSMITTERS

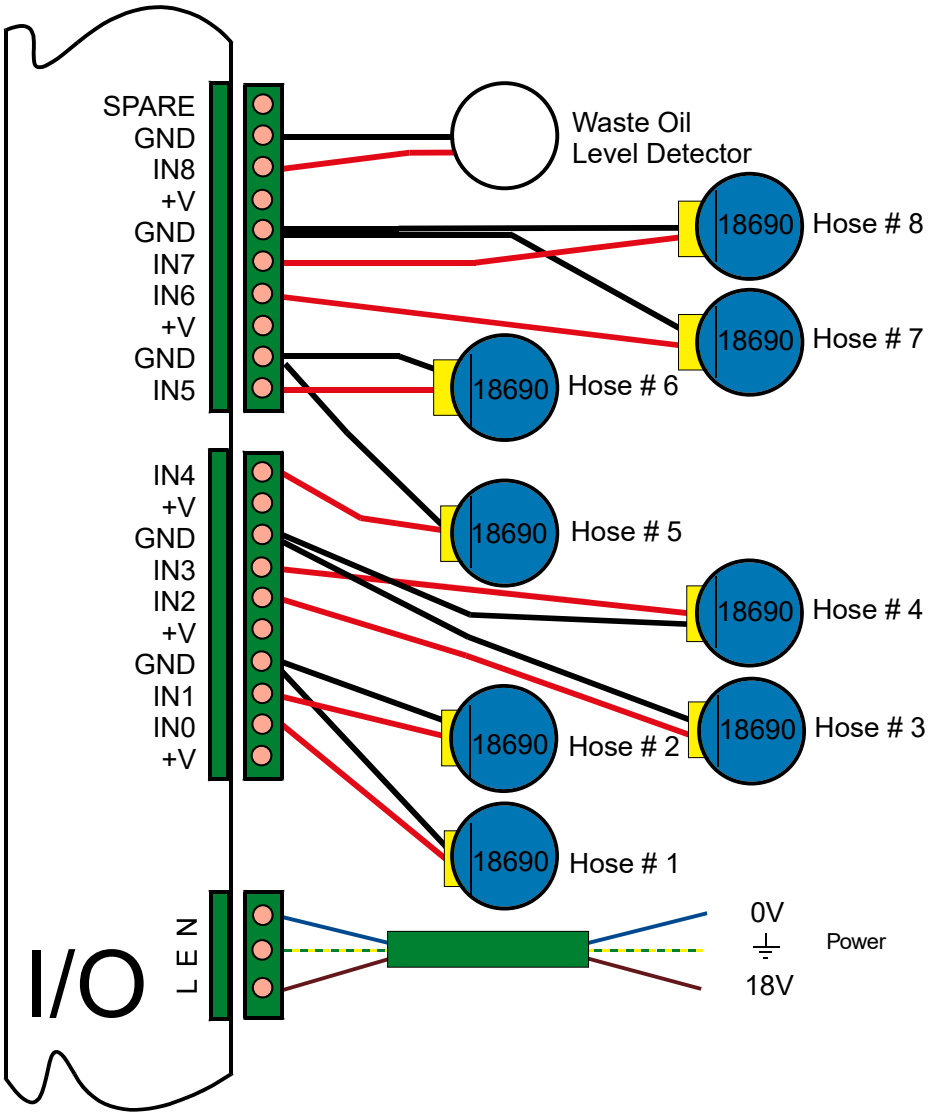

1.2.10 CONNECTIONS FOR THE POWER AND DUAL CHANNEL PULSE TRANSMITTERS

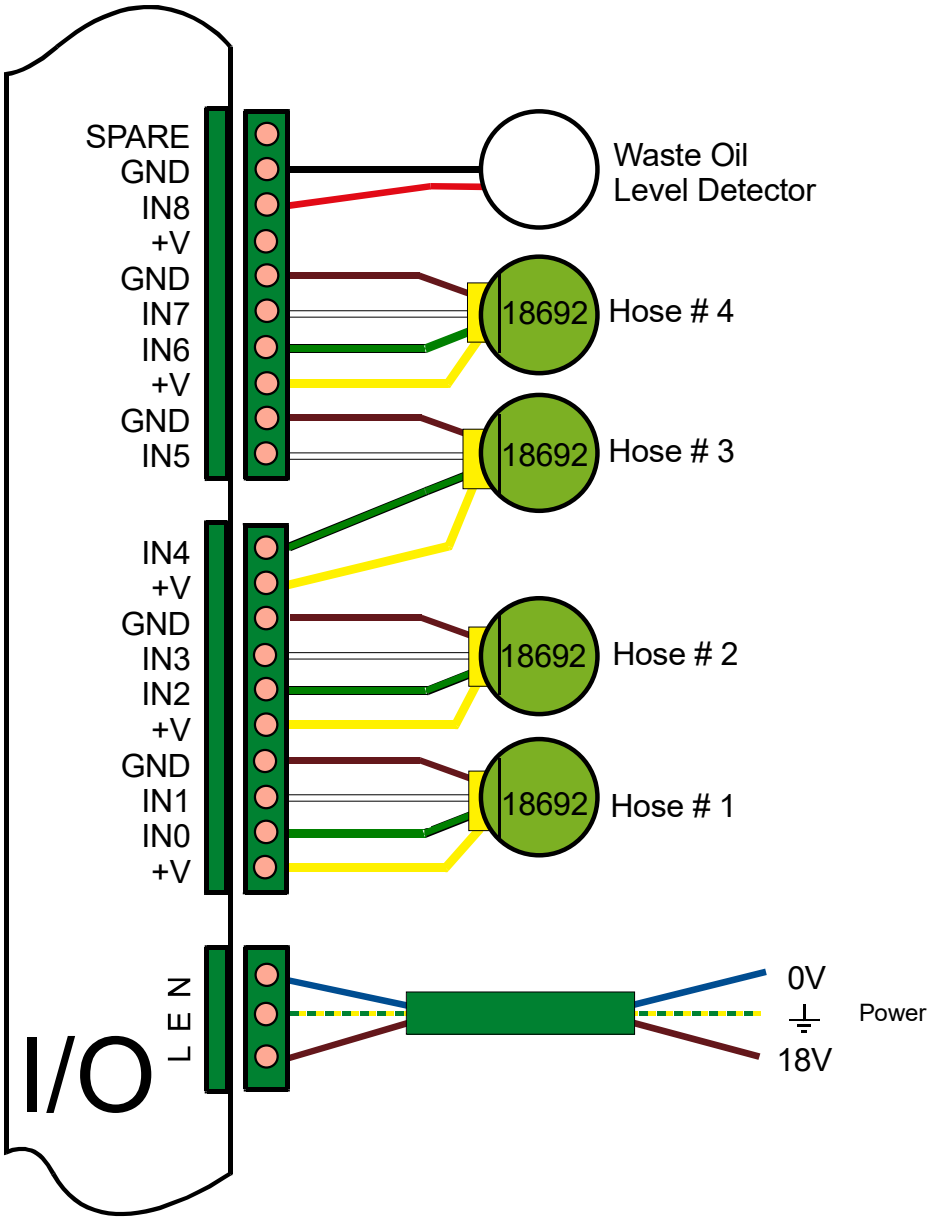

1.2.11 I/O CARD CONNECTORS

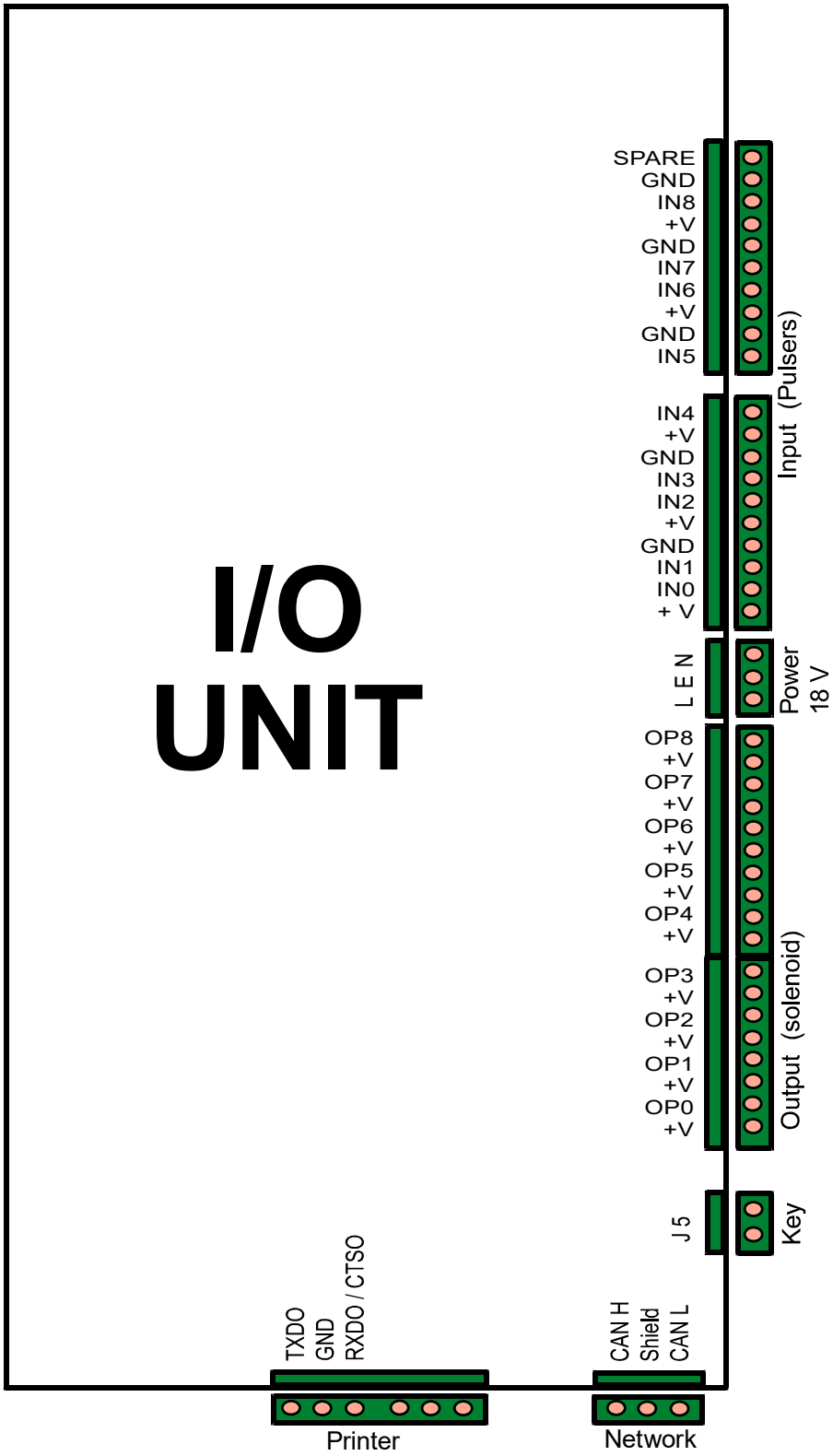

1.3 Cabling

1.3.1 THE NETWORK

The MDS 2000 is based on a network to vehicle the different information. The use of a preconized cable and the correct architecture are very important to avoid information conflicts and bad communication between the different components of your installations.

The different components connected to the network:

I/O unit(s)
Keypad(s)
Display(s)
Terminal for printer
PC,...

Network cable: Type 1 twisted pair shielded, "Appletalk" 9999 Belden, Belden 8451, Alpha 24561 or similar.
(CAN H & CAN L): Capacitance <= 65 pF/m.

Network structure: Type "in line"

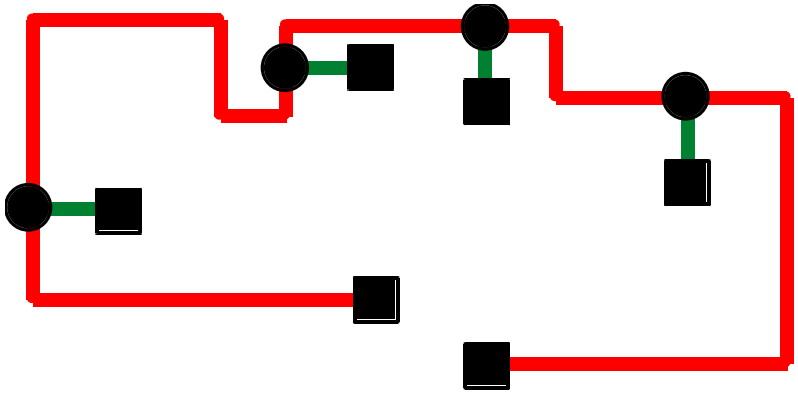

resistor 120 Ohm

correspond equally to an I/O unit, a display, a terminal for printer or a PC (only one PC by installation).

Junction box

You can see that all the different components of the installation are placed one after the other and that the architecture of the network is "in line" opposite to the schema at the next page, the network "in star" must be avoided.

N.B. a star branch of 3 meters maximum is allowed.

The maximum length of the network will be approximately 750 meters with the recommended cables.

Each end of the "line" is terminated by a 120 Ohm resistor fitted between CAN H and CAN L. A special jumper socket (JP) is mounted on the electronic board of each device and gives you the possibility to connect (IN position) or disconnect (OUT position) this resistor.

The use of junction boxes is deeply recommended.

Star network: BAD NETWORK!

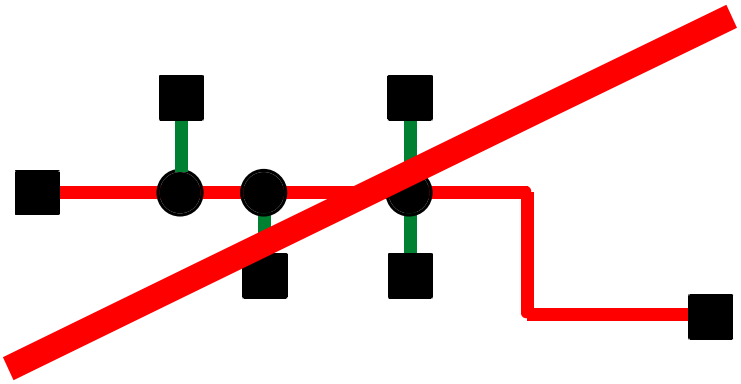

1.3.2 THE POWER

The power supply unit (PSU):

- Input: - 100 or 220 Volts AC
- Output - 18 VDC-power: 310 VA
  Power for the I/O units, keypads, displays and solenoids.
- An I/O unit uses 2,0 VA and needs a minimum of 10 VDC. (We are talking about the I/O card without any solenoid)
- A keypad uses 3,6 VA and needs a minimum of 10 DC.
- A display uses 3,6 VA and needs a minimum of 10 VDC.
- A 24 VDC Burkert valve uses 8,0 W and needs a minimum of 8 VDC. The number of solenoids by PSU depends on the type of solenoids you selected.

On each PSU, the connector shows:
L (Live) – (Earth) – N (Neutral): 220 VAC input
(Earth) – 0V (-) – 18 VDC (+): 24 VDC output

On each I/O unit, a connector shows you: L (+) – E (Earth) – N (-): 24 VDC input.
The earth must be connected with the frame nut and the shield. The input connector is valid for the alimentation of the electronic board and the solenoids.

On each keypad, a connector shows you: 18V Neut (-) – 18V Live (+): 24 VDC input.
The earth must be connected with a frame nut and the shield (between Can H and Can L).

On each display, a connector shows you: 18V Neut (-) – 18V Live (+): 24 VDC input.
The earth must be connected with a frame nut and the shield (between Can H and Can L).

A 2 Volts deviation range is allowable.
The power cable is: type 2 core + earth 0,75 mm^2 minimum.

1.3.3 THE TERMINAL LINKS

The terminal cable corresponds to a star's branch of maximum 3 meters.
The terminal cable is: Type 2 twisted pair shielded by pair (Belden 9723 or equivalent)
This cable contains the 24 VDC power (+ & -), the network (CAN H, CAN L) and shield/earth.

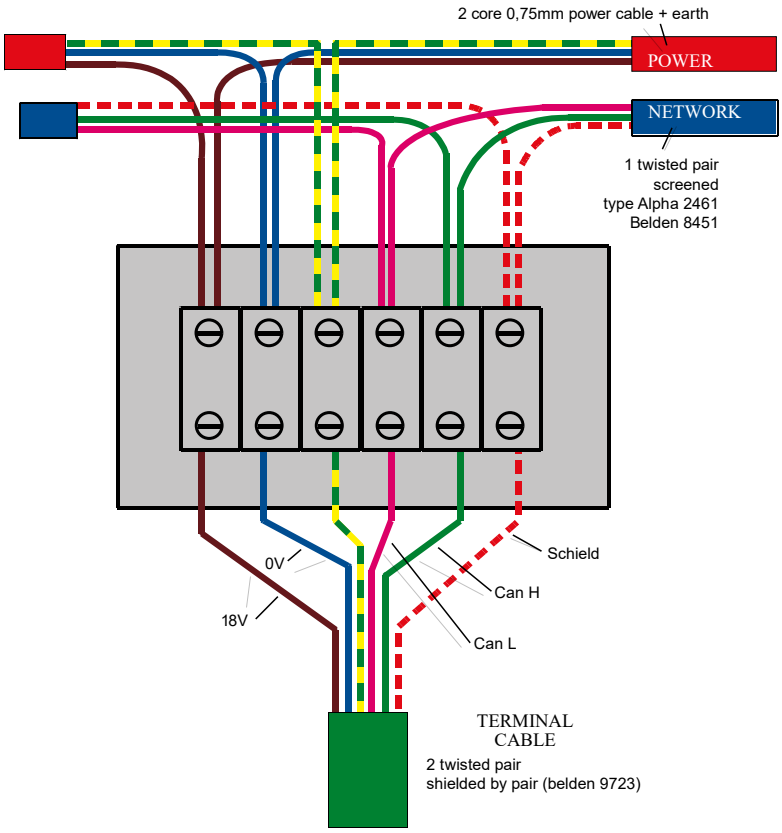

1.3.4 THE SOLENOID VALVES

Each solenoid valve is powered individually from the I/O unit.
On each I/O unit, a connector shows you V+ / Opx / ... frame connection.
The solenoids 1 to 8 are connected to the I/O ID 0, the solenoids 9 to 16 to the I/O ID 1 etc.

The solenoids cable is: Type 2 core + earth 0,75 mm^2

It is important to remember that the loss of tension in the cable is proportional to the distance and invertially proportional to the cable section. Then, it is important to use a sufficiently big cable and to reduce the length of the cable if possible.

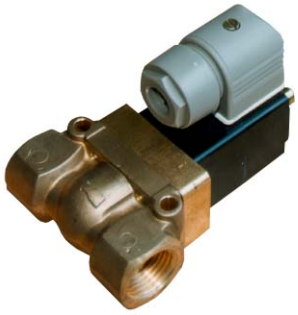

1.3.5 THE PULSE TRANSMITTERS

Each pulse transmitter is connected individually to the I/O board.

On each I/O board, a connector shows you: V+ / Inx / Inx / GND...
The two pulse transmitter's conductors need to be connected indiscriminately on the connectors INx and GND.
The pulse transmitters 1 to 8 are connected in the I/O ID 0, the pulse transmitters 9 to 16 in the I/O ID 1 etc...

The single channel pulse transmitter cable is: Type 1 twisted pair screened
The double channel pulse transmitter cable is: Type 2 twisted pair screened

At the right of the pulse transmitter connectors, you see: 1N8 – GND.

These inputs are for the connection of a level switch (N.O.) for the waste oil high level detection. When the switch is activated, it sends a signal to the system and the MDS 2000 will print an alert message.

1.3.6 THE PRINTER CABLE

The printer cable is: Type 3 conductors screened (or more)
The printers can be connected indiscriminately on the PC, I/O Unit (I.D.0) and/or keypad.

- Connection of the parallel printer to the PC for reports printing and/or ticket printing: refer to your PC manual.
- Connection of a serial printer (Epson emulation) to the PC for tickets printing
- Connection of a serial printer (Epson emulation) to the I/O unit
- Connection of a serial printer (Epson emulation) to a keypad
- Connection of a serial printer (Epson emulation) to a terminal for printer
  (The connections for the keypad and the terminal for printer are the same)

The maximum distance for the printer cable is 15 meters.
If you have a longer distance, use the L2061 network gate for long distance printer.

1.4 Network

1.4.1 INSTALLATION PROCEDURE

The MDS 2000 is a network system we can dissociate in 3 levels:

Level 1: Maximum 8 hoses without PC

- 1 I/O control unit controlling 1 to 8 solenoids and recording the pulses from 1 to 8 pulsers (1 by hose)
- Alphanumeric keypad (maximum 8)
- Large display for an easy reading of the quantity dispensed (maximum 16)

Level 2: Maximum 64 hoses without PC

- I/O control units (maximum 8) controlling maximum 64 solenoids (8 by I/O) and recording the pulses from maximum 64 pulse transmitters (1 by hose)
- Alphanumerical keypad (maximum 8)
- Large display for an easy reading of the quantity dispensed (maximum 16)

Level 3: Maximum 64 hoses with PC

An optional interface is available providing access from a PC to the Can Bus. A complete management software has been developed for a convivial use of the system from the PC.

- A computer PC type
- I/O control units (maximum 8) controlling maximum 64 solenoids (8 by I/O) and recording the pulses from maximum 64 pulse transmitters (1 by hose)
- Alphanumerical keypad (maximum 64)
- Large display for an easy reading of the quantity dispensed (maximum 16)

N.B.: In case of use of dual channel pulse transmitters (quadrature mode) for approved measurements, the number of hoses must be divided by two (it means 4 by I/O).

1.4.2 LOGIC STRUCTURE OF THE MDS NETWORK

This panel shows you the addresses (ID) of the I/O units, and the corresponding keypads, solenoids and pulse transmitters.

N° I/O Unit	N° Keypad	N° Solenoid	N° Pulser
0	0-1-2-3-4-5-6-7	1-2-3-4-5-6-7-8-9	1-2-3-4-5-6-7-8
1	8-9-10-11-12-13-14-15	10-11-12-13-14-15-16-17	9-10-11-12-13-14-15-16
2	16-17-18-19-20-21-22-23	18-19-20-21-22-23-24-25	17-18-19-20-21-22-23-24
3	24-25-26-27-28-29-30-31	26-27-28-29-30-31-32-33	25-26-27-28-29-30-31-32
4	32-33-34-35-36-37-38-39	34-35-36-37-38-39-40-41	33-34-35-36-37-38-39-40
5	40-41-42-43-44-45-46-47	42-43-44-45-46-47-48-49	41-42-43-44-45-46-47-48
6	48-49-50-51-52-53-54-55	50-51-52-53-54-55-56-57	49-50-51-52-53-54-55-56
7	56-57-58-59-60-61-62-63	58-59-60-61-62-63-64	57-58-59-60-61-62-63-64

The I/O unit with ID 0 will dialog with keypads #0 to 7 and control hoses # 1 to 8 based on pulses from counters # 1 to 8.

The I/O unit with ID 1 will dialog with keypads # 8 to 15 and control hoses # 9 to 16 based on pulses from counters # 9 to 16.

... continue with the same logic for the following I/O units.

1.4.3 HOW DOES THE NETWORK WORK?

The main part of the software is stored in the I/O unit. The keypad is the interface between the I/O unit and the operator.

In a multi I/O installation, there is always an I/O which is the "Master". The software recognises only the I/O Nr. 0 as the "Master". This "Master" I/O unit will store all the transactions and is the relay between the keypads and the other I/O units. These last ones will only control the solenoids and pulsers but will not store any transaction. They always receive their instructions from the "Master" I/O.

The following operations must be executed depending on the different installation configurations. We recommend to structure the dialog of the network before connecting the pulse transmitters and the solenoids to the I/Os.

1.4.4 LEVEL 1

Installation with 1 I/O unit, maximum 8 keypads and without PC.

- All the I/O units are delivered with the ID Nr. 0, don't modify it.
- All the keypads are delivered with the ID Nr. 1. A different ID Nr. must be given to each keypad.
- All the displays are delivered with the ID Nr. 0. A different ID Nr. must be given to each different display.

Procedure to change the address of the keypad (ID):

This procedure must be done from each keypad.
At power up, all the keypads will show:

Figure 1: *VERSION* *n° #.##*

I.D.: X Version Date

(X is the address of the keypad)

1. Remove all the keypad's connectors or shut-off the power
2. Press the key "Space" on the keypad you need to change and hold down
3. Put back the connector or power on
4. Release the "space key": the screen will show: ID?
5. Type in the keypad ID Nr. (0 to 7)
6. Press enter

Execute the same procedure with different ID Nr. for all the keypads. On every keypad, you have to give and address for the ticket A& B printer setup.

When all the keypads will be correctly identified by the network, they will all show "PIN".

N.B.: If your installation contains one L2061 network gate for long distance printer, please note the ID "0" is reserved to this device.

Procedure to change the address of the display (ID):

1. Remove the displays' connector or shut off the power
2. Change the address (see schema)
3. Put back the connector or power on
4. The good display's identification can be checked via the software in test C

1.4.5 LEVEL 2

Installation with multi (2-8) I/O, maximum 8 keypads without PC

- All the I/O units are delivered with the ID Nr. 0. A different address (ID) must be given to each I/O unit.
- Regarding the address of the keypad (ID), see procedure to change the address of the keypad (ID). On each keypad, you have to give an address for the ticket A & B printer setup.
- Regarding the address of the display (ID), see procedure to change the address of the display (ID).

Procedure to change the address of the I/O unit (ID):

1. Remove all the power connectors of all the I/O units.
2. Put back the power connector of the highest I/O unit. For example, if you have 3 I/O units in the garage, put back the power connector from the I/O corresponding to hoses #17 to 24.
3. Go to the closest keypad, enter into the system configuration and install menu to set the minimum parameters described in chapter 2 (the network).
4. Go to the prompt "change I/O ID"
5. Set I/O address to 2 (Hoses # 17 to 24)
6. Exit the configuration procedure (go back to PIN)
7. Remove the I/O power connector
8. Do the same procedure for I/O Nr. 1 (Hoses # 9 to 16)
9. Do the same procedure for I/O Nr. 0 (Hoses # 1 to 8)

The following are the minimum parameters which must be set correctly for each I/O unit to set up the dispensing part of the program.

Refer to the configuration and installation menu of your manual.

	Factory setup
- Date / Time	Greenwich
- Dispense Mode	Free dispense
- Initial Timeout	6 sec
- Inactive Timeout	60 sec
- Encoder Type	Single channel
- Simultaneous / Non-Simultaneous	Simultaneous
- Pulses / litre	100 PPL

All these data must be the same on each I/O!

N.B.: On an installation with PC; just by activation of the "send" option, the configuration (minimum parameters) is automatically sent to all the different I/O units. Except Date / Time you still have to program on each I/O.

The I/O address ID Nr. is stored in a permanent memory which is read only when the system is powered on. This is the reason why it is requested to power off and back on (or unplug and replug the power connector) the system after a modification of the address.

Modification of the minimum parameters after configuration:

If one or more of the minimum parameters have to be modified on a multi I/O system, it will be necessary to change one of the keypad's ID Nr. to talk with the respective, I/O. Hereafter is an example if a minimum parameter has to be changed on I/O Nr. 2.

1. Change the address of the closest keypad (see procedure to change the address of the keypad (ID) into the address ID Nr. 16 compatible with I/O Nr. 2.
2. Enter in the system configuration and installation menu to modify one or more parameters
3. Exit the configuration procedure (go back to PIN)
4. Re-enter the original keypad ID you modified

1.4.6 LEVEL 3

Installation with a PC; multi I/O and maximum 64 keypads.

With the use of a PC, you still need to:

- Give to each I/O a different address (ID): see "procedure to change the address of the I/O unit (ID)".
- Program Date and Time on each I/O.
- Give at each keypad a different address (ID): see "procedure to change the address of the keypad (ID)".
- Give at each display a different address (ID): see "procedure to change the address of the display (ID)".
- Insert a PC card in your computer, charge the special software, configure all the system, send the configuration through the network.

For PC upgrade information, see manual "PC card upgrade".

1.5 Troubleshooting

Do not forget that you need to clear all the transactions (Supervisor Menu) before any configuration!

In case of problems try to isolate the problem by changing the device that seems damaged.

Therefore, you need to have spare parts with you

1.5.1 COMMUNICATION PROBLEMS

The display of the keypad shows:

VERSION	n° #.++
I.D.: x	Date of version

and does not switch to the prompt:

Enter PIN No.
- - - -

The network cable is wrong.

- You have a "Star" network and not a "In line" network.
- The jumper sockets are not in the "IN" position at the beginning and the end of the CAN bus (120 Ohm between CAN H & CAN L): see jumper sockets IN or OUT.
  IN: Resistor is fitted between Can H and Can L
  OUT: Resistor is not fitted between Can H and Can L

- The RAM is overloaded: Remove it, do a short-circuit between the different pin's, replace it. The RAM is the sip No. U5 - HM628128LP.
- If you don't remember a PIN code.

Emergency PIN for lost supervisor PIN.

We have introduced a method to release systems where the Supervisor PIN has been lost or illegally changed. This is based on time and date and gives a different PIN every hour.

If the customer calls needing the PIN he should be asked for the time and date which is shown on the display every minute. You have then to make the following calculation:

Month x7891
Day x3456
Hour x4567

The PIN code to use will be the last 4 numbers of the addition.

Example: We are the 21st January 1998 – 11.35 AM

01 x7891=	7891
21 x3456=	72576
11 x4567=	50237
	130704

the right code is 0704

Now get the customer to enter an invalid PIN to reset the 9999 counter.

He should now enter 9999 twice followed by the PIN calculated above.

On each entry the invalid PIN message will be shown.

At this point the default PINs will be reset. (i.e. 9999 – 1111 and 2222)

- The CAN L or CAN H wires are interrupted, non or badly connected.
- CAN L and CAN H are inverted.
- No power 24 VDC at the I/O unit.
- Not enough power (< 9 VDC) at the I/O unit or at the keypad.
- Check the fuses on the I/O card.
- Check the thermic fuses on the PSU.
- The Eprom is not well plugged in or is damaged.
- The Eprom is the ship U$ - AM29F010/27/001
- Use of non-compatible Eproms.
- The peel is damaged (very hot) due to short-circuit on the I/O card or a bad connection. The peel is the sip U14 – 22V10.

1.5.2 PROBLEMS WITH THE DISPLAY

- If you are in test C (system menu) and the addresses displayed are not the same as these selected on the micro-switches (back of the card): shut all the system off (or the wrong display), wait a few seconds and switch the power back on. (The reset time must be long enough)
- Check the display allocation (system menu) of the different hoses.
- Check the minimum power (9 VDC) at the display.
- Check the network (CAN H & CAN L) at the display.
- Replace the display and send it back to us for repair.

1.5.3 PROBLEMS WITH THE SOLENOID VALVES

- All the solenoids are open all the time: check the position of the override key switch on the I/O box.
- You are in test A (system menu) and no solenoid is working:
- Check the connections (solenoids, I/O card)
- You are in test A (system menu) and one or more solenoids are not working:
- Check the connections (solenoids, I/O card)
- Check the voltage at the solenoid, there is maybe too much power loss on the line?
- Check the continuity of the cables.
- Exchange the solenoid.
- You have a "pulser error" message, check in "set encoder type" if you are in quadrature or in single pulse mode.

1.5.4 PROBLEMS WITH THE PULSE TRANSMITTERS

- You don't have any delivered quantity on your tickets, the display is not working but you can take some oil.
- Check if the display is well located to the hose which delivers the product
- Check the connections (pulsers, I/O card)
- Check the continuity of the cables
- With an Ohmmeter, check that you have well contact / non-contact / contact ... at the pulser connection, then at the I/O connections when you use this pulser. (Put the Ohmmeter on DC voltage)
- If you possess a pulses counter, check that the pulses are well arriving at the I/O card.
- Exchange the pulser.
- You are in FLT FLT FLT FLT or OK OK OK OK mode (Test in system menu):
  This test is only valid for quadrature pulsers.
  You have the possibility to test a maximum of 4 quadrature pulsers connected on the I/O unit.
  The position of the message indicates where the position of the pulser is.

An OK message indicates that the quadrature pulser is well connected.

A FLT (faulty) message indicates that the quadrature pulser is not well connected.

If you connect single pulsers, a FLT message will appear.

1.5.5 PROBLEMS WITH THE PRINTERS

Check all the connectors.

- Check the continuity of the cables.
- Check the different printer setup (system menu)
- Check the power on the max 232 of the keypad or I/O unit where the printer is connected:

if the printer is connected on the I/O unit (ID 0), the max 232 is in U11 – MAX232
if the printer is connected to a keypad, the max 232 is in U9 – MAX 232.
With a Voltmeter, check the power between PIN 2 and the GND: you must have + (8-9) VDC.
Check the power between PIN 6 and the GND: you must have – (8-9) VDC.

- If the printer (ticket printer on serial port of the PC) is not working correctly, check the minimum version of Windows: 3.11.

1.5.6 PROBLEMS WITH THE PC SOFTWARE / INTERFACE

- Be sure you have well read all the chapter 4: PC card upgrade.
- On the right side of the bottom of the PC screen, there are 8 little squares.
  If you have x I/O connected on your system, you must have x little green squares.
  Otherwise, you have a network problem.

1.5.7 EXPLANATIONS FOR THE TRANSACTION END CODES PRINTED ON EACH TRANSACTION TICKET

0 Means that the transaction has been stopped after the inactive timeout:
- It's normal in free dispense mode
- The preset quantity has not been totally dispensed

1 In preselect mode, the preset quantity has been totally dispensed: Completed
2 Input error in the pulses sequence: For quadrature pulsers only
3 Count error: Missing pulse in quadrature pulsers only
4 It means that the power has been shut down during the transaction: Power down
5 The transaction has been stopped by the emergency procedure ("..."): System inactive
6 IOP error: Microprocessor error
7 Unauthorised transaction: For approved systems only, quantity dispensed between 0,5 Lt and 100 Lt.

1.5.8 PROCEDURE TO CHANGE THE BATTERY

- Test of the microprocessor supervisory circuit "MAX690" next to the battery:
- With power 24 VDC: Pin 3 (-) Pin 7 (+) = 5 VDC
- Without power 24 VDC: Pin 4 (-) Pin 8 (+) = 3 VDC (2 VDC MIN)
- Print a diagnostic and your reports by security.
- Under tension, remove the battery and replace it by a new one.

2. SOFTWARE MANUAL

2.1 Program license agreement

Before opening the software envelopes, please read the terms of the following license agreement carefully.
You signify your acceptance of the terms of this agreement by opening the envelopes.
If you do not agree with them, you should promptly return the package.

Article 1: License grant

We grant you a license:

1. To use the program in a single machine
2. To make archival back-up copies of the program in support of your use of the single program on a single machine
3. To transfer the program to another party if that party agrees to accept the terms and conditions of this agreement and you do not retain any copies of the program, whether in printed or machine-readable form. Except as expressly provided for in this license, you may not copy, modify or transfer this program.

Article 2: Term

This license is effective until terminated. You may terminate it at any time by destroying the program together with all its copies in any form. It will also terminate upon conditions set forth elsewhere in this agreement. You agree, upon such termination, to destroy the program together with all copies in any form.

Article 3: Disclaimer of warranties and limitations of remedies

1. Our software is sold and licensed "as is". All warranties, either expressed or implied are disclaimed as the software and its quality, performance or fitness for any particular purpose. You, the customer, bear the entire risk relating to the quality and performance of the software. In no event will we be liable for direct, indirect, incidental or consequential damages resulting from any defect in the software. If the software proves to have defects, you, and not we; assume the cost of any necessary or repair.
2. Thirty-day limited warranty on disks. We warrant the enclosed disk to be free of defects in material and workmanship under normal use for 30 days after purchase. During the 30-day period, you may return a defective disk to us and it will be replaced without charges, unless accident or misuse damages the disk. Replacement of a disk is your sole remedy in the event of a defect, this warranty gives you specific legal rights, and you may also have other rights, which vary, from state to state.
3. Some states do not allow the exclusion or limitation of implied warranties of liability for incidental or consequential damages, so the above limitation or exclusion may not apply to you.
4. You may not sub-license, assign or transfer the license or the program except as expressly provided in this agreement.

Any attempt otherwise to sub license, assign or transfer any of the rights, duties or obligations is void.

2.2 PC card upgrade

2.2.1 INTRODUCTION

The MDS 2000 's PC card upgrade allows you to control your oil monitoring system MDS 2000 from a PC (IBM compatible). This offers the possibility to use the network's capabilities to configure the whole system, to dispense oil and to visualize all reports from the PC.

The software is written under Delphi Programmation (Borland Software) and is based in Visual Basic C++.

2.2.2 ABOUT THE PC INTERFACE CARD

The master PC package is composed of:

- 1 CAN-Bus communication 8-bit card
- 3 diskettes 3,5" containing the software (2 for the Borland Database and 1 for the monitor software)
- 1 disposable Wrist Strap (antistatic)

2.2.3 PC CARD INSTALLATION

This section provides important information about installing the PC card upgrade. Make sure that you read this section completely before attempting installation.

2.2.4 PC MINIMUM REQUIREMENTS

IBM compatible PC 386 – 25 Mhz
2 MB RAM memory
40 MB hard disk drive
3,5" Floppy disk drive

VGA monitor
Operating system: Microsoft Windows Version 3.11
Serial mouse

1 empty 8-bit slot

2.2.5 MDS 2000 REQUIREMENTS

Check that your MDS 2000 system has at least the following system configuration before installing the PC card upgrade:

Eprom Version #6.02 on I/O
Eprom Version #3.05 on keypad

2.2.6 PC CARD HARDWARE INSTALLATION

1. Turn off power to PC
2. Remove cover from PC
3. Set-up card address – see table below

Conversion table

Switch 1 = 10	Switch 4 = 80
Switch 2 = 20	Switch 5 = 100
Switch 3 = 40	Switch 6 = 200

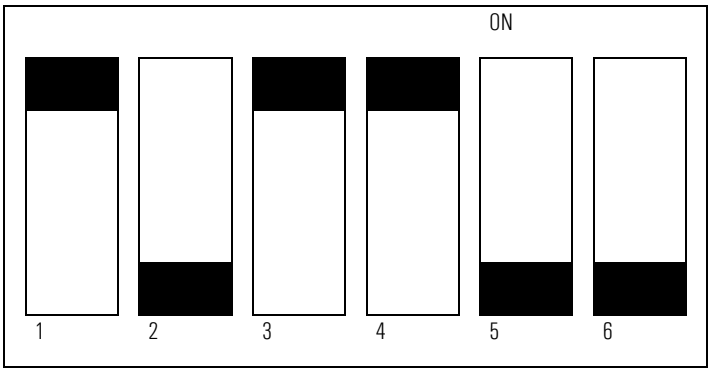

The default address is 320

Example: Address # 320	Address # 340
Switch 2 = OFF (20)	Switch 3 = OFF (40)
Switch 5 = OFF (100)	Switch 5 = OFF (100)
Switch 6 = OFF (200)	Switch 6 = OFF (200)

Please remember that the PC should always be turned off before removing the cover, especially if you intend to insert or remove the card. Keep a note of the address that you set the card to as you will be required to use it later.

4. Insert card into any empty 8-bit slot (do not manipulate the card without antistatic wrist strap).
5. Replace cover on PC
6. Connect the MDS 2000's PC card onto the CAN bus of the MDS 2000 network. The connection must be done through a serial connection – DB 9 Male.

   Wiring connection of the DB 9: PIN # 6 = CAN HIGH
   PIN # 7 = CAN LOW

   The shield is not necessary because the card is well isolated. If the PC is installed at the end of the MDS 2000 network, don't forget to place jumper socket in "IN" position on the PC card.

7. Power on

2.2.7 PC CARD SOFTWARE INSTALLATION

The installation of the software must be done in two steps. Both steps require Windows to be running and this installation assumes a little knowledge of Windows.

1. Insert the "Oil Master Software" Disk #1 into the floppy drive A.
   Note: If your drive is drive B then use B: in place of A: throughout the rest of the installation procedure.
2. Select RUN from the file menu of the program manager.
3. Type A: SETUP and press <enter>.
   From now on if you wish to exit the install routine, then simply click on the exit button. A message will be displayed. Then, click the OK button and the install routine will be halted.
4. After a few seconds, the welcome screen appears. If you wish to continue installing the software, click on the continue button.
5. You will then be prompted to enter the directory into which the software will be installed. If you are not sure where to put it, then just click the continue button. If you wish to change the directory, type in the new directory and then click the continue button.
6. The software now installs the software in the required directory. The graph indicates the current percentage installed. Some files are large, particularly "LUBEXMAS.EXE" and take a while to copy, so don't worry if the system appears to have stopped. The program then asks if you want to create a program manager group icon (select yes or no).
7. Once the files are copied, the screen will change and you will be asked to enter your name and company name. Once your name is entered, press TAB to enter your company name. If you do not wish to enter a company name or entry of your names is complete, click on the OK button.
8. The next screen informs you that the installation is complete. Click the OK button. You should now be returned to the program manager. Select the icon you want to have on your screen and you may change its name.
9. Remove the "Oil Master Software" disk and insert the "Borland Database Engine" disk # 1into drive A.
10. Select RUN from the program manager file menu.
11. Type A: SETUP and press enter.
12. After a small delay the welcome screen should appear. Click on OK.
13. You will now be prompted to enter the directories of various files. These should be left as the default. If you should wish to change them, make sure that both lines are identical. Now, click on the continue button.
14. The next screen is a prompt to tell you that the files are about to be installed. To install the files, click on the install button.
15. The software will now start installing the files. After a while, you will be prompted to change the disk over. When the prompt appears, remove "Borland Database Engine" disk #1 and insert "Borland Database Engine" disk #2 into drive A: then click on continue.
16. Once the installation is complete, a message stating such is displayed. Just click on the Exit button.
17. This completes the installation.

2.2.8 RUNNING THE SOFTWARE

Once all the software is installed, you can run the Oil Monitor Program.
Open the Oil Monitor PC Master Group file if not already open.
Double click on the Master Icon.

The first screen to appear requires entry of the address of the PC CAN Card which you set in step 3 of the hardware installation.

Enter this value by clicking on the down arrow next to the address, select the required value with the mouse, then click on the OK button. The system will try to locate the card at this address. If not successful an error message will be displayed. This is

probably due to either the address you selected in the software is not corresponding to the address selected on the PC card or there are two cards inside the PC with the same address. You have the choice of entering another address or continuing without the card. If you continue without the card, you will be unable to communicate with the Oil Monitoring System at a later date. If you change the address of your PC card make sure that you exit the Oil Monitor Master software, that you exit Windows properly and that the PC is turned off before removing the case.

2.3 Using the software

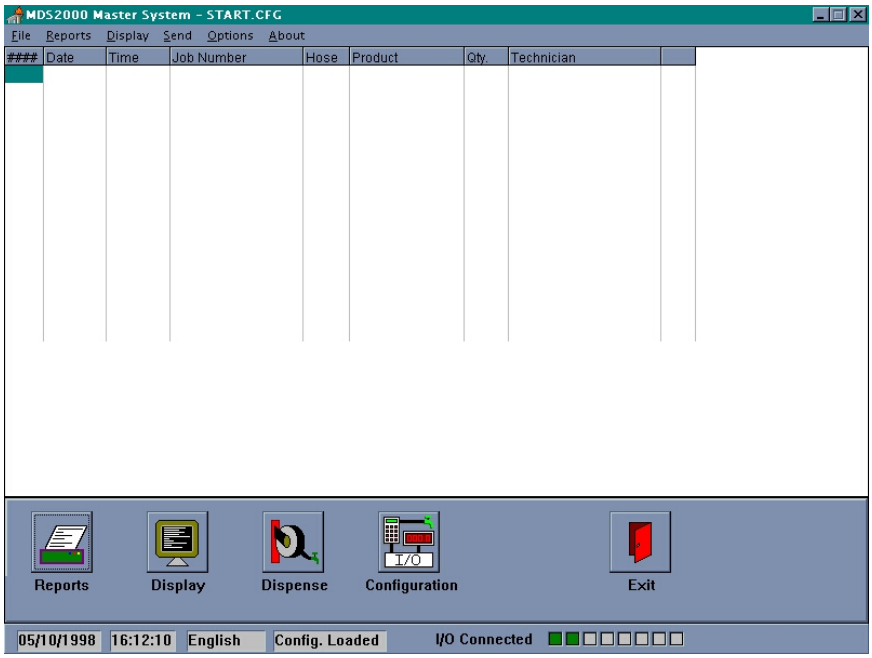

On the right side of the bottom of the screen, there are 8 little squares. These squares represent the availability of the maximum of 8 I/Os connected. When an I/O is connected the square is green. This feature allows you to check the network between the PC and all the I/Os.

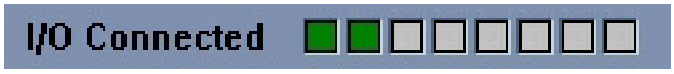

In case that none of the squares are green, it means wrong communication on the network, please check the wiring with the MDS 2000 in the network.

On the bottom of the screen, you have different options:

2.3.1 CONFIGURATION BUTTON

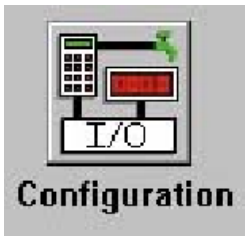

Click on it and enter your PIN number (different PIN numbers for three levels of security: supervisor 9999 – system 1111 – configuration 2222).

You must configure all the MDS 2000 installation from the PC. The PC software recognise the previous configuration made at the keypad.

General:
From there, you can configure the different codes, times and general configuration of the installation.
Click on the "change" buttons to get enable the windows button and when all the changes are done, click the "save" button to save the configuration.

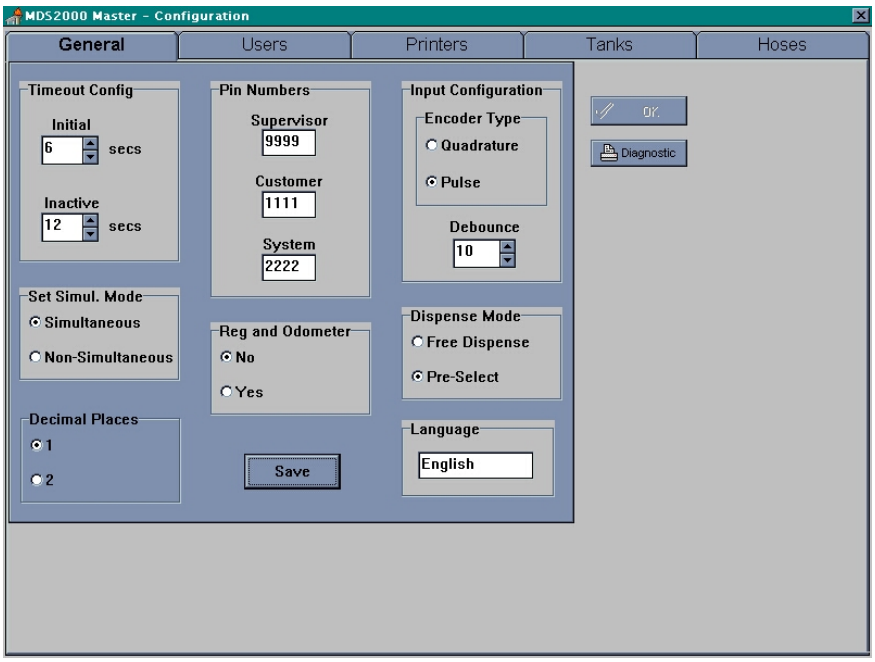

Users:
You can configure the names and codes of the different users of the system to add a new user, click the "add" button and follow the steps on the screen.

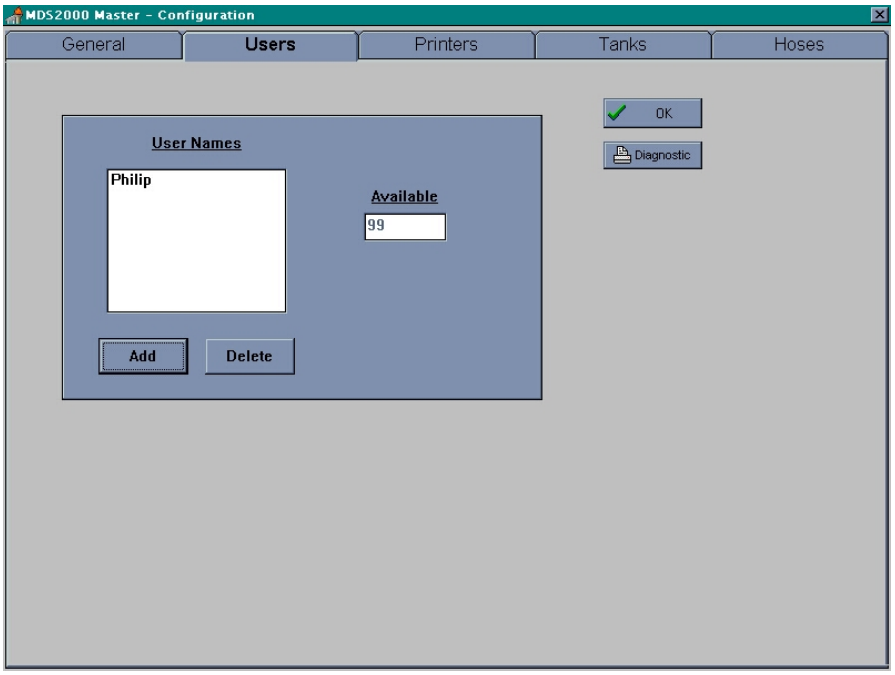

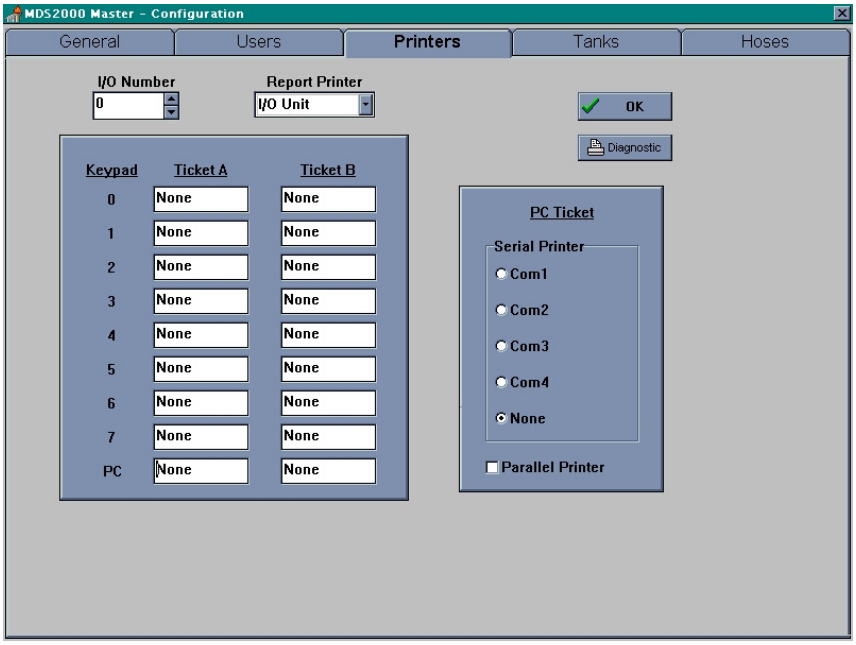

Printers:
You can configure the allocation of the different printers located in the system.
First select the ID number of the I/O (o-7). Then choose where you want the print reports and transactions from each keypad.
If you have a PC printer, also select where it is located.

Examples:

- Select I/O 0
- I/0 0 will communicate with keypad 0 to 7 only, and with the PC.
- Select the location of the report printer if you have a report printer connected to a keypad or an I/O unit (remark: only the report requested at the keypad are concerned, not the reports at the PC)
- Select the location of the ticket A, if desired, the location of a copy (ticket B)

PC ticket:
The MDS 2000 allows to print the transaction ticket at the PC station, select the COM or Parallel port where the transaction must be addressed.

Tanks:

Configure the product names and allocate them to the respective tank.

Click on the "add" button and follow the steps to create a new product.

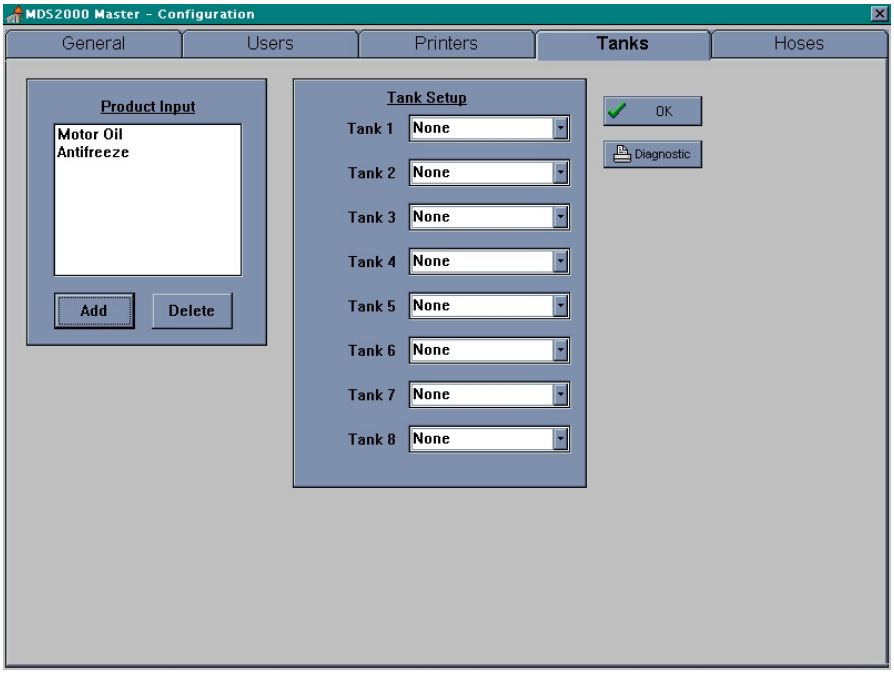

Hose configuration:

Allocate your hose outlets to the respective tank and the respective display ID Nr.

For each selected I/O, enter the hose, tank and display allocation, the correction factor, the PPl and the max. quantity to be dispensed at this outlet.

Then click "save" to save your configuration.

(for more information, see "user manual" point 4: "system menu")

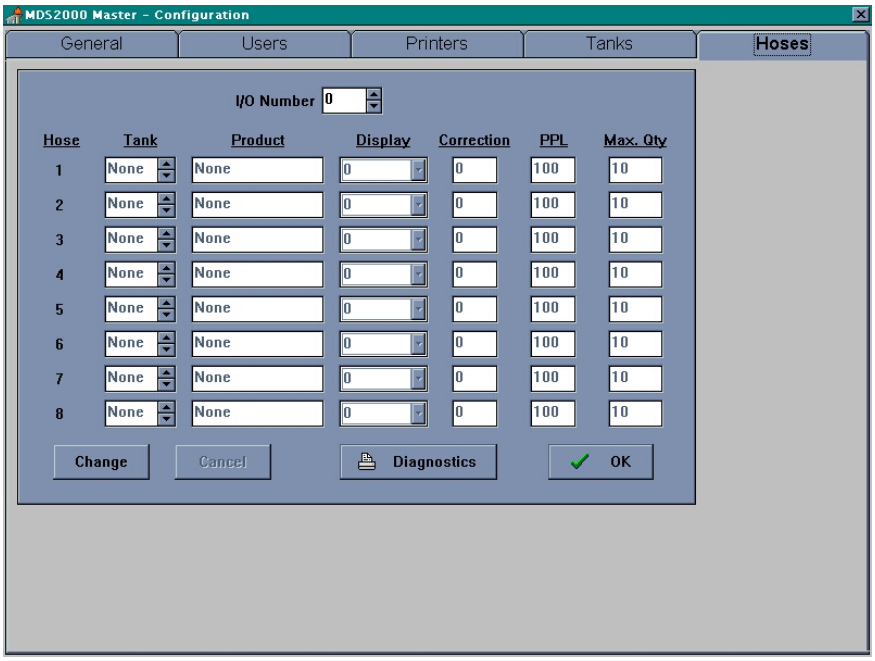

2.3.2 DISPLAY BUTTON

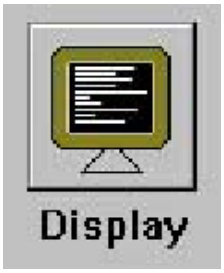

Click on the display button and enter the system PIN number.

Two different buttons appear: - Tank level

- Oil usage

The oil usage button is for statistics by users and by products. It is not available for this moment.

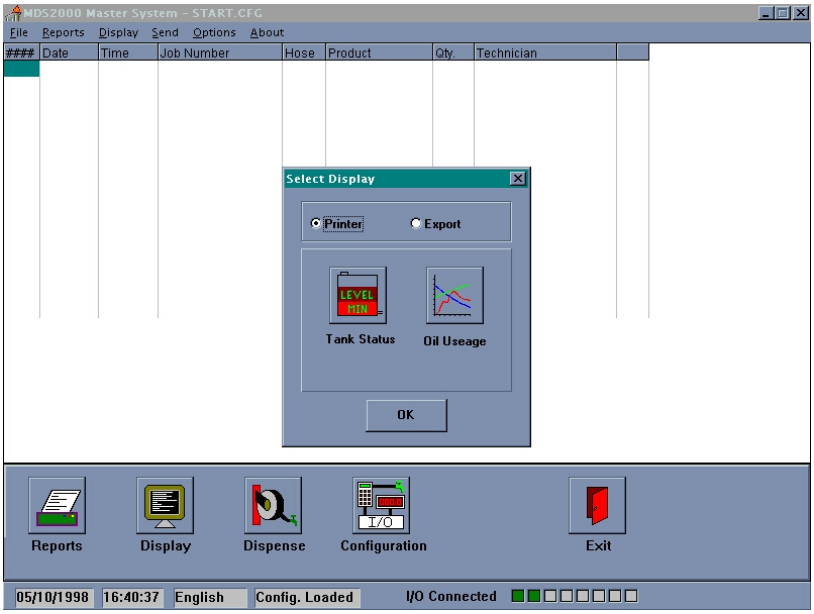

Click on "Tank status"

Click on a tank to configure it.

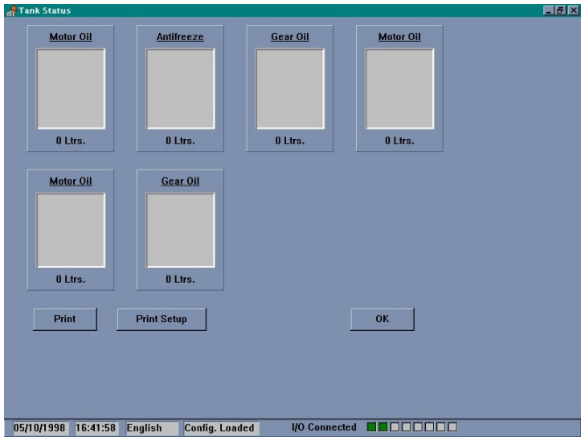

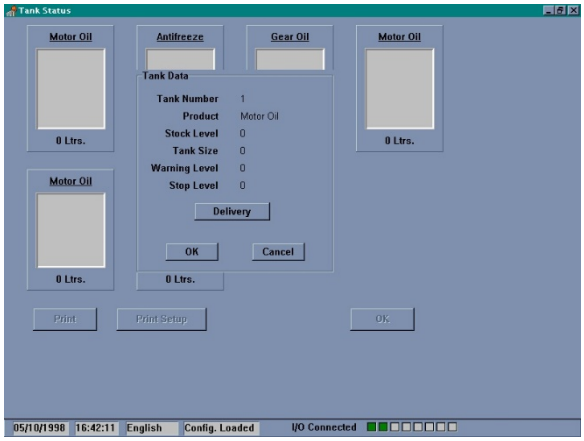

How to proceed:

- The stock level may be in lts or gallons
- The tank size may also be in lts or gallons
- The warning level: when the stock arrives under the warning level, a message will be printed on each transaction ticket and displayed on the keypad when the corresponding hoses are required
- The stop level: it will prevent dispenses of the selected product when the level in the tank is under the stop level limit. This will prevent air to enter the oil line and prevent any risk of impurities entering the line as well

To change any values, just click on it!

2.3.3 REPORT BUTTON

Click on the report button and enter the system PIN number.

Different types of transaction reporting are available:

Report all: No selection, you receive all information

- Report by user: You can select the user with scroll menu
- Report by product: You can select the product with scroll menu
- Report by hose: Type the hose number
- Report by registration: Type the registration number
- Report by job number: Type the right job number

For each report you will have to select a date: from... to...

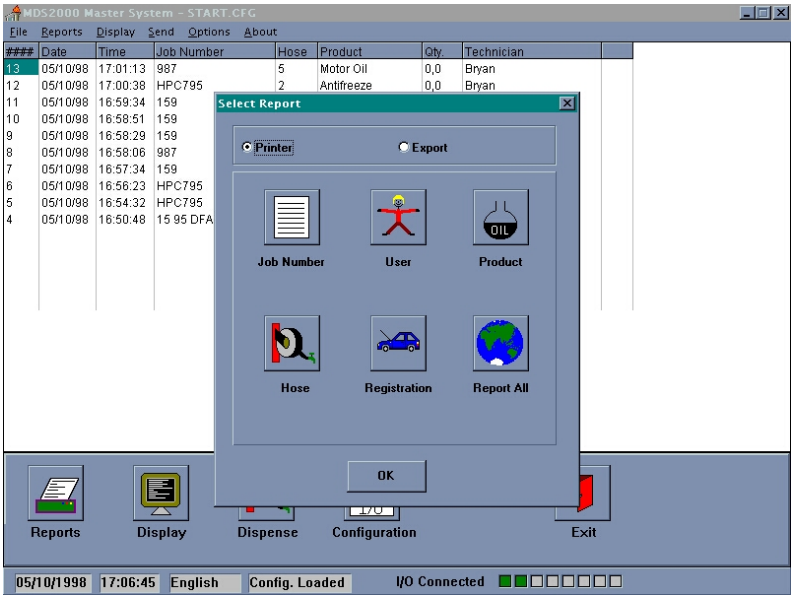

2.3.4 DISPENSE BUTTON

Click on the dispense button.

You use the PC like a standard keypad to make a transaction. If the registration and odometer option is on, it will also appear on this screen.

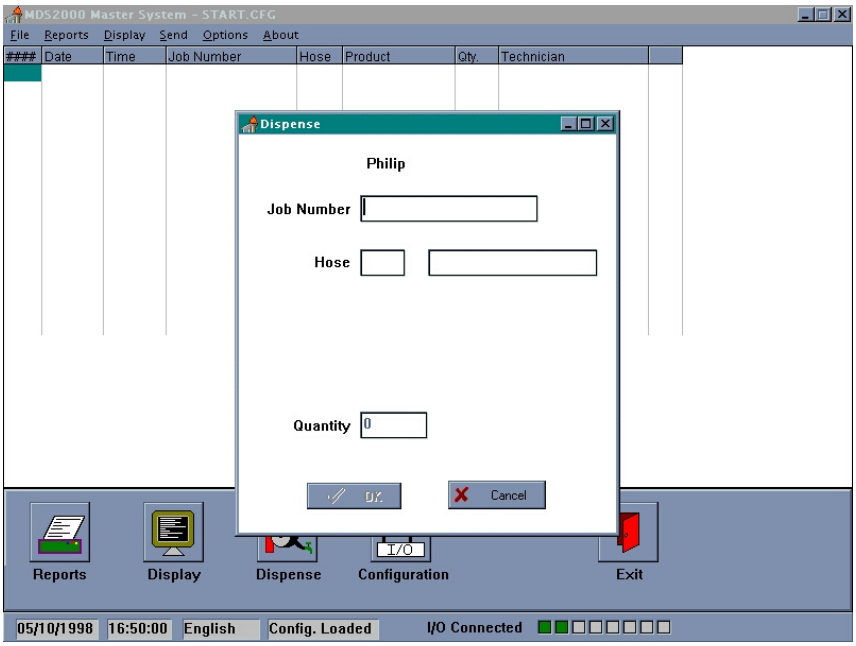

2.3.5 EXIT BUTTON

Just click and you are out of the program.

On the top of the menu bar, the two needed items are the options: SEND & OPTIONS.

If you activate the option SEND, the configuration stored in the memory of your PC will be transferred on the MDS 2000 network.

To be used carefully:

The OPTIONS choice allows you:

1. To change the language of the PC master software.
2. To enable or disable the sound - each time a transaction arrives on the PC hard disk through the MDS 2000 network sound can be heard.
3. To activate "Transactions to disk" which allows you to transfer a copy of each transaction in a ASCII file on your hard disk. Each ASCII file can be treated by any software program (such Excel – Word – et. or into accounting package software).

You will need a special procedure to get this option enabled or disabled.

Please contact your installer.

2.4 Export file possibilities

2.4.1 TWO POSSIBILITIES ARE AVAILABLE

#1.

On request of a transaction report (any available: by Job – Registration – Hose – User – etc.), you have the choice between "Printer" or "Export".

If you choose "Export", an ASCII file will be issued (you have the choice where to place this file). This file is an ASCII file (CSV format) and it is exactly the same as a report issued in standard on the MDS system.

This option is more used for occasional applications (to make "spreadsheet" report). For daily applications, we deeply recommend the 2nd possibility.

#2.

The "Transaction to disk" option is activated. Each time a transaction is terminated and arrived on the screen of the PC, a "copy" is written on the hard disk (or floppy, the place where to copy the file needs to be specified at the activation of the option).

The transaction's copy is an ASCII file (CSV format).

2.4.2 TRANSACTION TO DISK OPTION

2.4.2.1 How is it working?

- Enter the code *** (special procedure)
- Select where you want to place the transaction to disk and define the file
- The file is composed with 16 lines.
  For each line select the information you want (select the line, double click on the required information)
- As last operation, you have to put "End of File" to close the procedure

2.4.2.2 General description

The PC is collecting information from the system, processing and sending the data on a transaction base. The PC is responsible for delivering an ASCII File in a local or shared file system in the customer's computer transfer area, by means of different techniques (or via Lanmanager or FTP, in a network environment, via RS 232 in non-networked environments, via local hard disk, or even diskettes may be possible for emergencies). The customer should then from this area, read and merge data into his own software.

2.4.2.3 Transactions

The PC delivers each transaction in separate files named "transaction nr.".

Each transaction possesses a unique number and so, one transaction is equal to one ASCII file. The numeration is growing from transaction n° "0" to "9999" after the numeration returns to "0" and begins again until "9999".

The transaction is available no later than 1 minute after the transaction has been terminated in the workshop

2.4.2.4 Responsibility

It is the responsibility of the MDS to deliver secured transactions in the DOS file system. It is the responsibility of the customer to pick or to move data's from this area and to remove or to merge transactions when used.

2.4.2.5 Security

The master software secures that each use of the system, generates a transaction. This transaction should then be ready by the customer and controlled for:

Correct Sequence n°:

If sequence n°s are missing, the customer's software should generate a warning.

Action: a. Find the missing transactions and enter it manually

b. Search reason for missing transaction and correct

Correct Job n°:

If job n°s are not recognized, the customer's software should generate a warning.

Action: a. Find the right job n° and enter it manually

b. Search reason for wrong job n° and correct

Correct Part n°:

If part n°s are not recognized, the customer's software should generate a warning.

Action: a. Find the part n° and enter it manually

b. Change part n° in the PC software or in the customer's software so they match.

2.5 Backup - restore or Archive Database

You have first the possibility to backup the database you are using. You have to go into the top menu bar in the "file"\Backup Database.

Enter the system PIN number and choose where you want to make your backup.

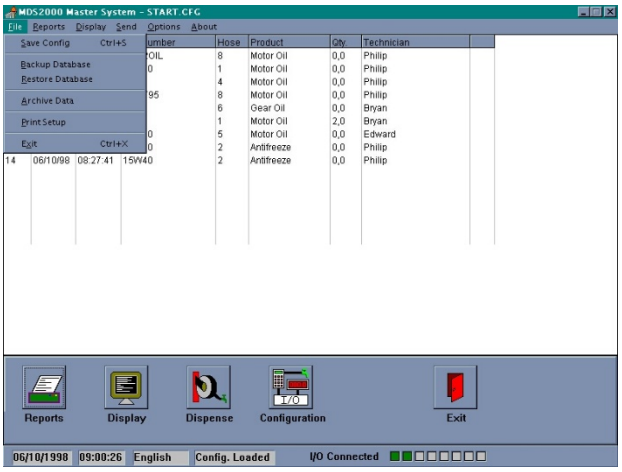

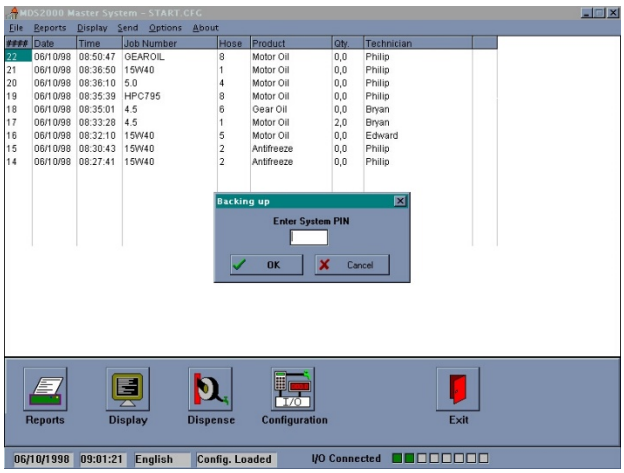

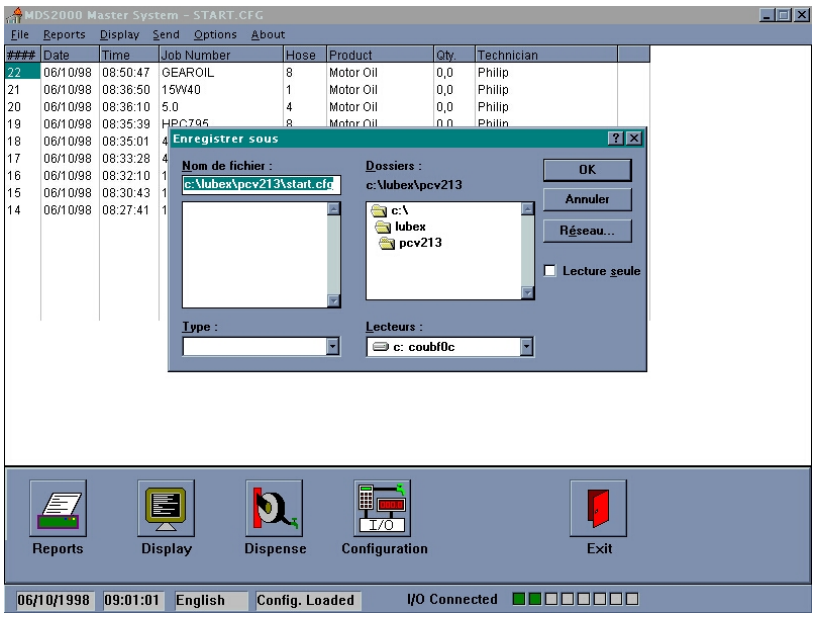

The second possibility you have is to restore a database.

Follow the same step as for the backup, the system will tell you that this will clear the current database.

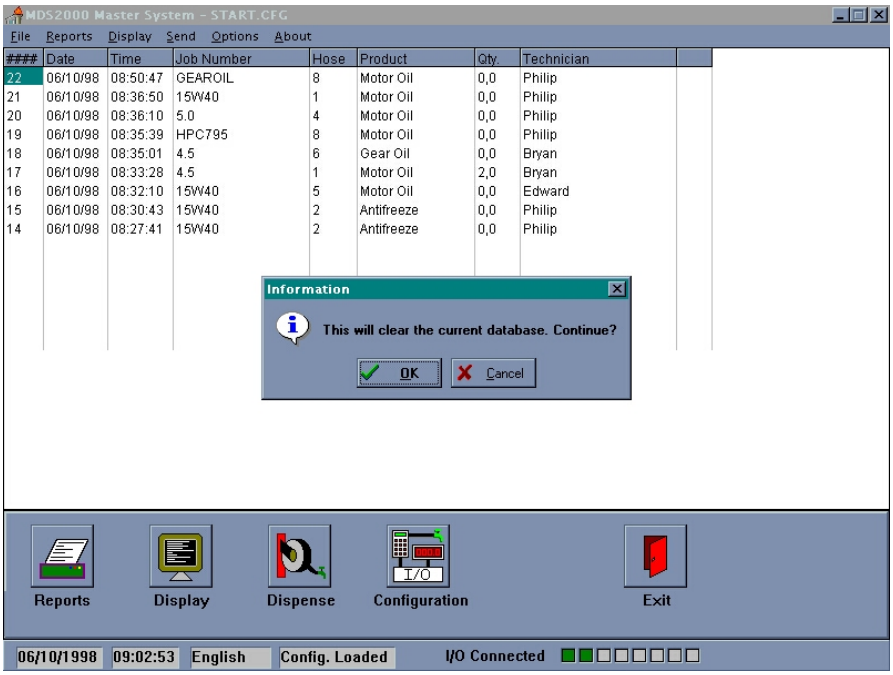

You can also archive your database. Follow the same procedure as to backup.

Control. Manage. Optimize.

Trademarks appearing in this document are the property of their respective entities. Due to continuous research, product improvements and enhancements, Badger Meter reserves the right to change product or system specifications without notice, except to the extent an outstanding contractual obligation exists. © 2021 Badger Meter, Inc. All rights reserved.

www.badgermeter.com