Blancett®
Turbine Flow Meters

Digital Flow Monitor

B2900

Badger Meter®

DSY-PM-01378-EN-10 (March 2024)

User Manual

CONTENTS

Scope of This Manual 5
Safety 5
Terminology and Symbols 5
Considerations 5
Electrical Symbols 6
Introduction 6
Installation. 7
Connecting the B2900 Monitor to a Frequency Output Device. 7
Power Connections 9
Standard 9
Operating the Monitor 10
Buttons 10
Modes of Operation 11
Programming Using Frequency Output Turbine Flow Meters. 11
Enter Programming Mode 11
Menu Structure 12
Liquid 12
Advanced I/O Liquid. 14
Gas. 16
Advanced I/O Gas 18
Liquid (Solar Powered) 20
Gas (Solar Powered) 22
Programming 24
Saving Programmed Parameters 24
Liquid 24
Gas. 38
Save Settings and Return to Run Mode. 38

Troubleshooting Guide 39
Default K-Factor Values 39
Battery Replacement 40
K-Factors Explained 41
Calculating K-factors 41
Modbus Interface 44
Modbus Register / Word Ordering 45
Specifications 48
Part Number Construction 49
Mounting Options and Dimensions 50
Meter Mount 50
Remote Mount 50
Handheld 51
Swivel Mount 52

SCOPE OF THIS MANUAL

This manual is intended to help you get the B2900 flow monitor up and running quickly.

IMPORTANT

Read this manual carefully before attempting any installation or operation. Keep the manual accessible for future reference.

Unpacking and Inspection

Upon opening the shipping container, visually inspect the product and applicable accessories for any physical damage such as scratches, loose or broken parts, or any other sign of damage that may have occurred during shipment.

NOTE: If damage is found, request an inspection by the carrier's agent within 48 hours of delivery and file a claim with the carrier. A claim for equipment damage in transit is the sole responsibility of the purchaser.

SAFETY

Terminology and Symbols

⚠ DANGER Indicates a hazardous situation, which, if not avoided, will result in death or serious personal injury.

⚠ WARNING Indicates a hazardous situation, which, if not avoided, could result in death or serious personal injury.

⚠ CAUTION Indicates a hazardous situation, which, if not avoided, could result in minor or moderate personal injury or damage to property.

Considerations

The installation of the B2900 monitor must comply with all applicable federal, state, and local rules, regulations, and codes.

⚠ WARNING

EXPLOSION HAZARD - SUBSTITUTION OF COMPONENTS MAY IMPAIR SUITABILITY FOR CLASS I, DIVISION 2.

⚠ AVERTISSMENT

RISQUE D'EXPLOSION - LA SUBSTITUTION DE COMPOSANTS PEUT RENDRE CEMATÉRIEL INACCCEPTABLE POUR LES EMPLACEMENTS DE CLASSE I, DIVISION 2.

⚠ WARNING

DO NOT CONNECT OR DISCONNECT EITHER POWER OR OUTPUTS UNLESS THE AREA IS KNOWN TO BE NON-HAZARDOUS.

⚠ AVERTISSMENT

RISQUE D'EXPLOSION. NE PAS DÉBRANCHER TANT QUE LE CIRCUIT EST SOUSTENSION, À MOINS QU'LL NE S'AGISSE D'UN EMPLACEMENT NON DANGEREUX.

IMPORTANT

Not following instructions properly may impair safety of equipment and/or personnel.

Electrical Symbols

Function	Direct Current	Alternating Current	Earth (Ground)	Protective Ground	Chassis Ground
Symbol					

INTRODUCTION

The B2900 flow monitor incorporates state-of-the-art, digital signal processing technology, designed to provide exceptional flexibility at a very affordable price. Though designed for use with Blancett flow sensors, this monitor can be used with almost any flow sensor producing a low amplitude AC output or contact closure signal.

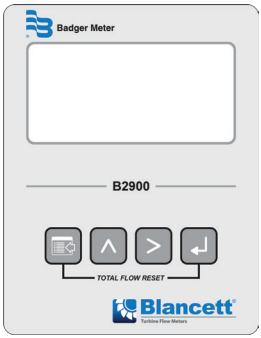

Figure 1: B2900 Flow monitor (NEMA 4X)

This monitor can accept low-level frequency input signals typically found in turbine flow sensors. The output signal for these types of sensors is a frequency proportional to the rate of flow. The B2900 monitor uses the frequency information to calculate flow rate and total flow. Through the use of the programming buttons, you can select rate units, total units and unit time intervals among other functions. If required, the monitor can easily be re-configured in the field. Finally, you can choose between simultaneously showing rate and total, or alternating between rate and grand total.

INSTALLATION

Connecting the B2900 Monitor to a Frequency Output Device

The B2900 monitor has two jumpers for setting the type of signal and the minimum amplitude of the signal that it accepts. First, establish the type of output provided by the flow sensor. The outputs almost always fall into one of two types.

- Type 1 is the unaltered frequency signal coming from an un-amplified magnetic pickup. This signal is normally a sine wave in appearance, and the amplitude of the waveform varies with the flow. Small turbines have comparatively small rotating masses so they produce a smaller amplitude waveform and higher frequencies than larger turbine sensors.
- Type 2 is the frequency signal from the transducer amplified, wave shaped or both to produce a waveform of a specified type and amplitude. Most amplified transducers output a square wave shape at one of many standard amplitudes. For example, a popular amplified output is a 10V DC square wave.

If the flow sensors output signal is type 1, you must also determine the minimum amplitude of the frequency output. The B2900 monitor has a high or low signal sensitivity setting. Use the high signal sensitivity (30 mV) with low amplitude (usually small) turbine flow sensors. Use the low signal sensitivity setting (60 mV) for larger turbines and amplified transducers. See *Figure 2 on page 7*.

Use the high signal sensitivity setting where the minimum signal amplitude is below 60 mV. Setting the sensitivity higher than necessary may allow noise interference.

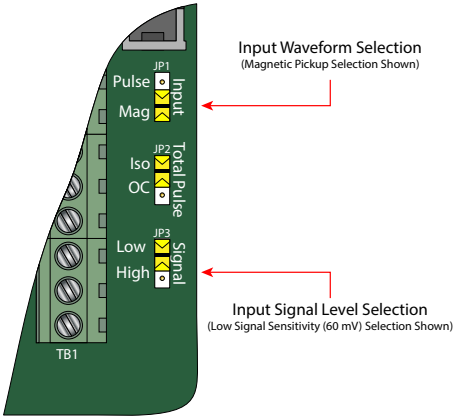

Figure 2: Input jumper settings (NEMA 4X)

When the type of waveform and input signal level (amplitude) are determined, set the jumpers on the B2900 monitor circuit board.

For typical variable reluctance magnetic pickups, set the waveform selection jumper for Mag. Determine the setting for the input level by looking at the magnetic pickup specifications. If the minimum amplitude at the minimum rated flow is greater than 60 mV, use the low signal sensitivity jumper position. See *Figure 2*.

If the minimum signal level is below 60 mV, use the high signal sensitivity jumper position.

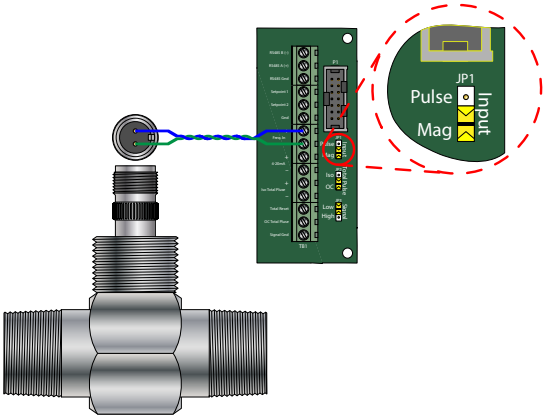

Figure 3: Typical magnetic pickup connection (NEMA 4X)

For amplified input signals, set the input jumper to Pulse and the signal jumper to Low. See *Figure 4 on page 8*.

NOTE: Amplified magnetic pickups require an external power source. The B2900 monitor does not supply power to an amplified pickup.

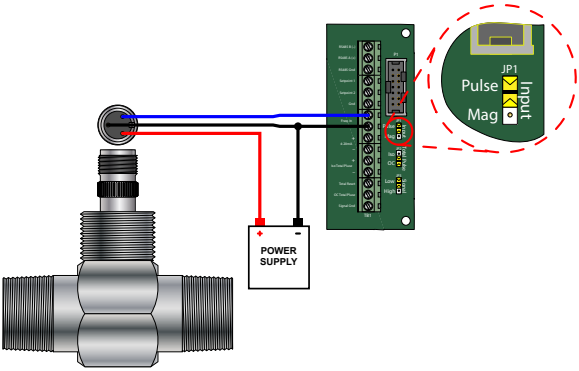

Figure 4: Typical amplified pickup connection (NEMA 4X)

POWER CONNECTIONS

Standard

The power supply used in the B2900 monitor is an internal lithium 3.6V DC D cell that powers the monitor for about six years when no outputs are used. The monitor can also get power from a 4…20 mA current loop. See *Figure 5*. If the current loop is used, a sensing circuit within the monitor detects the presence of the current loop and disconnects the battery from the circuit.

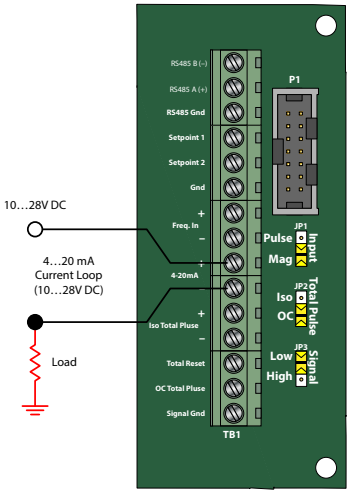

Figure 5: Loop power connections (NEMA 4X)

OPERATING THE MONITOR

Buttons

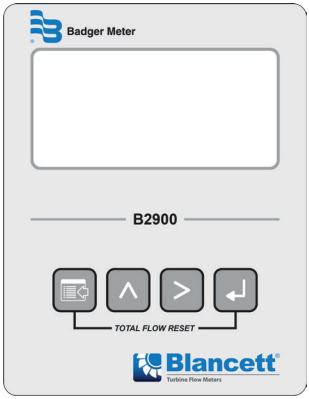

Figure 6: Keypad detail

	MENU	Switches to *Program* mode, press and hold for three seconds to enter *Extended Programming* mode, saves programming information and is used in the reset process
	UP	Scrolls backward through the parameter choices, increments numeric variables and increases display contrast in *Run* mode
	RIGHT	Scrolls forward through the parameter choices, moves the active digit to the right and decreases display contrast in *Run* mode
	ENTER	Advances to the next programming parameter and is used in the reset process

Special Functions

MENU + ENTER	Simultaneously press and hold to reset the current totalizer
UP + RIGHT	Simultaneously press and hold to show the firmware version number, then the grand total

Modes of Operation

The monitor has three modes of operation— *Run*, *Programming* and *Extended Programming* modes.

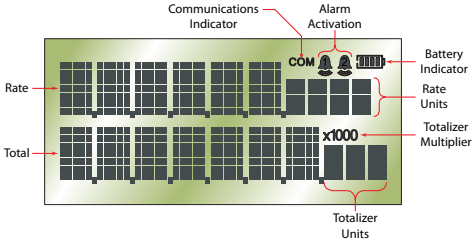

Figure 7: Display annunciators

Run	Normal operating mode
Program	Program variables into the display
Extended Program	Program advanced variables into the display
Test	Diagnostic tool to show input frequency and totalizer counts

If the monitor is a replacement, the turbine's K-factor changed or the monitor is used with some other pulse generating device, you must program it.

Programming Using Frequency Output Turbine Flow Meters

Each Blancett turbine flow meter is shipped with either a K-factor value or frequency data. If frequency data is provided, the data must be converted to a K-factor before programming the monitor. K-factor information, when supplied, can usually be found on the neck of the flow meter or stamped on the flow meter body. The K-factor represents the number of pulses per unit of volume. See *"K-Factors Explained" on page 41*. The K-factor is required to program the monitor.

Enter Programming Mode

To access the *Programming* mode, momentarily press and then release **MENU**. The monitor displays *Fluid*. To access the *Extended Programming* mode, press and hold **MENU** until *Fluid* is displayed. To return to *Run* mode, press **MENU**.

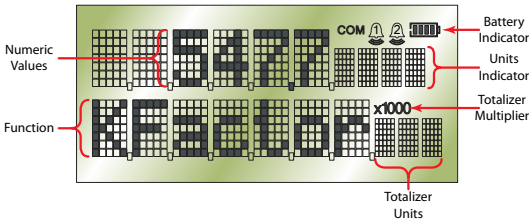

Figure 8: Programming mode display

MENU STRUCTURE

Liquid

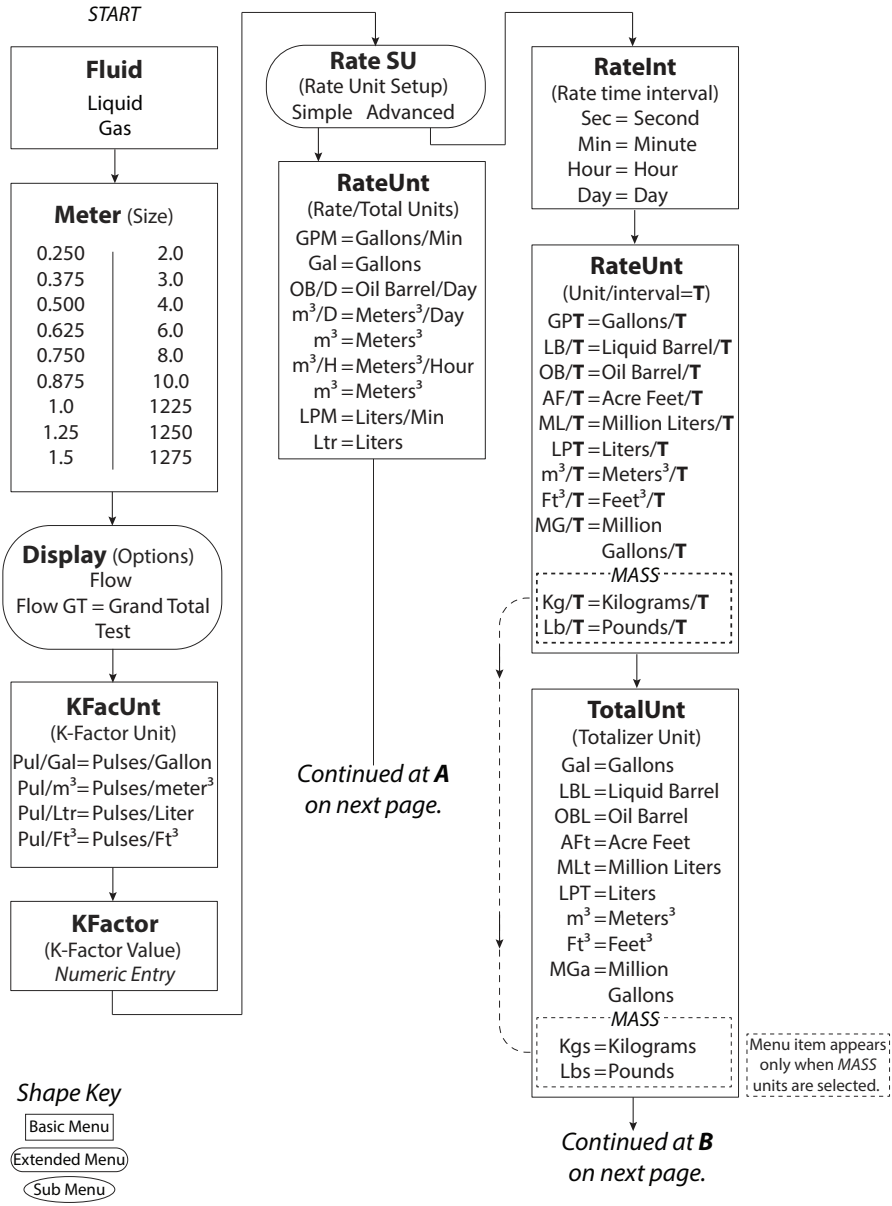

Liquid (continued)

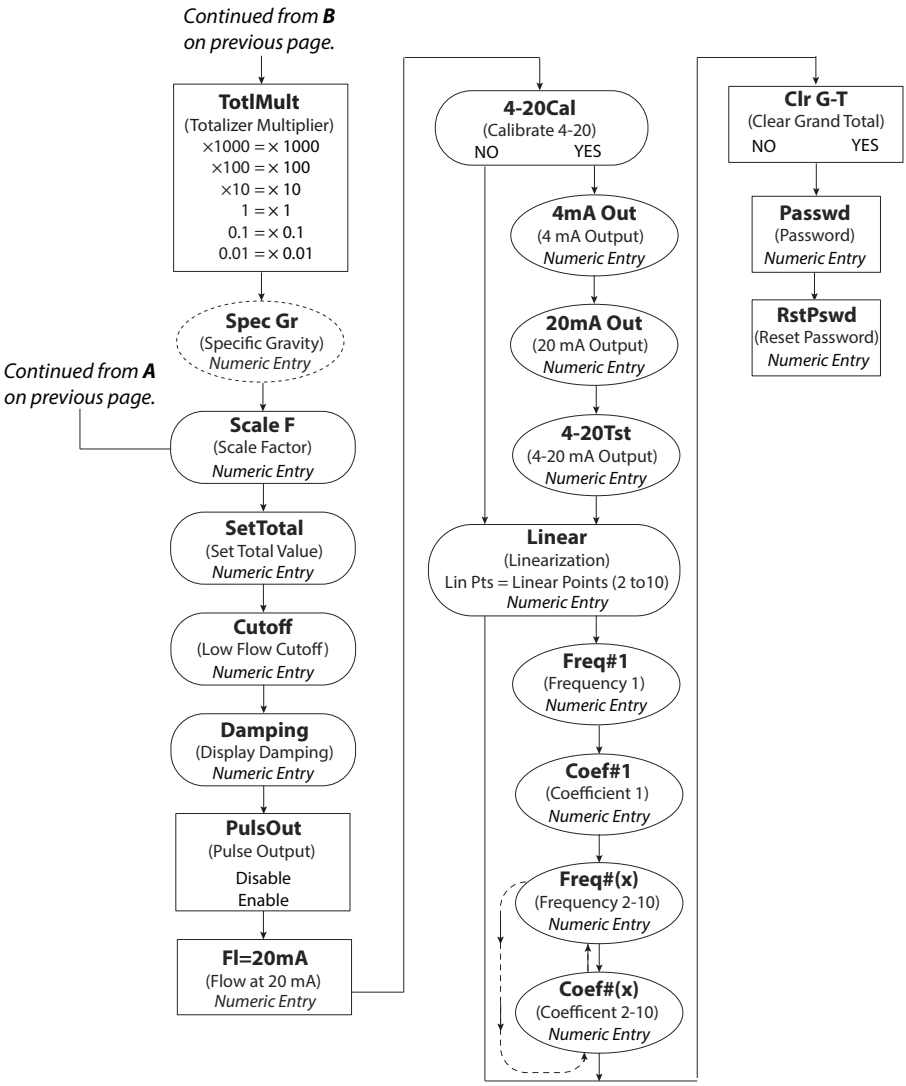

Advanced I/O Liquid

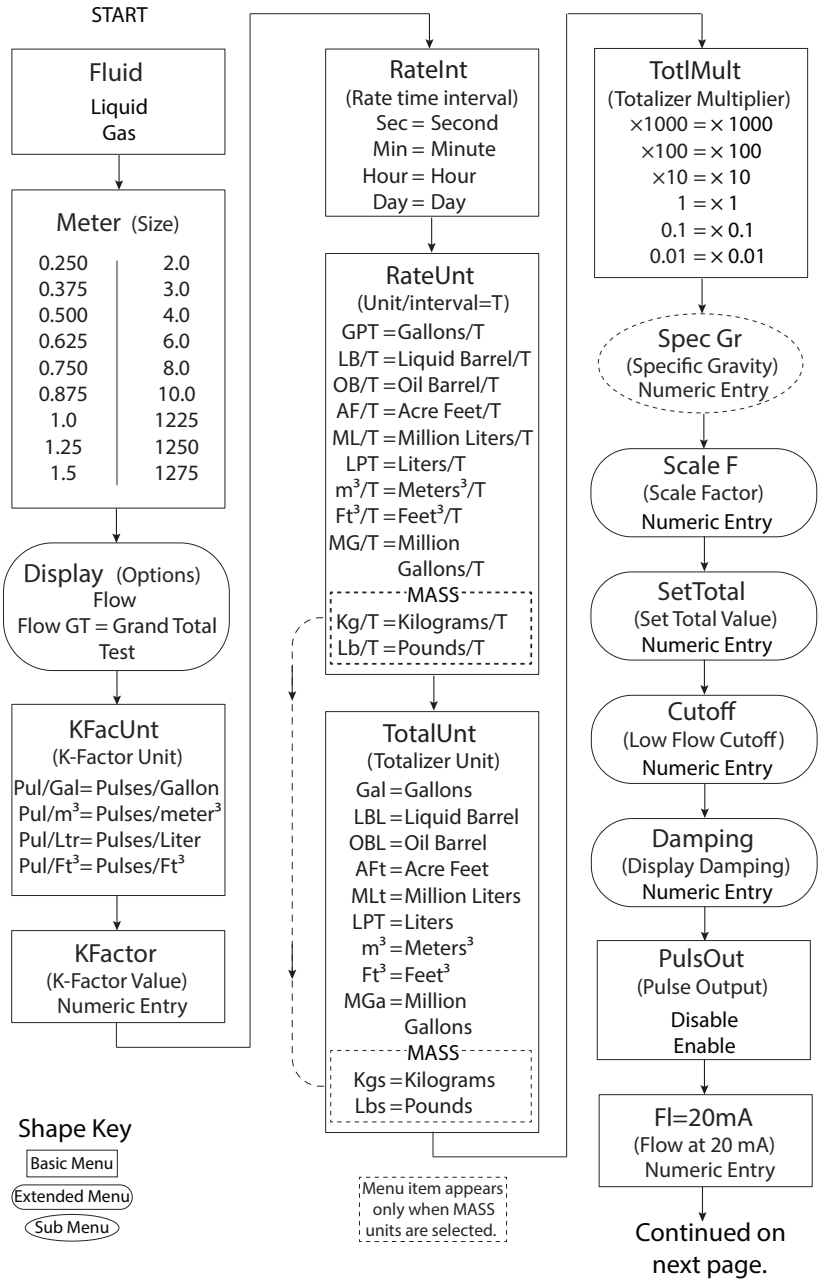

Continued on next page.

Advanced I/O Liquid (continued)

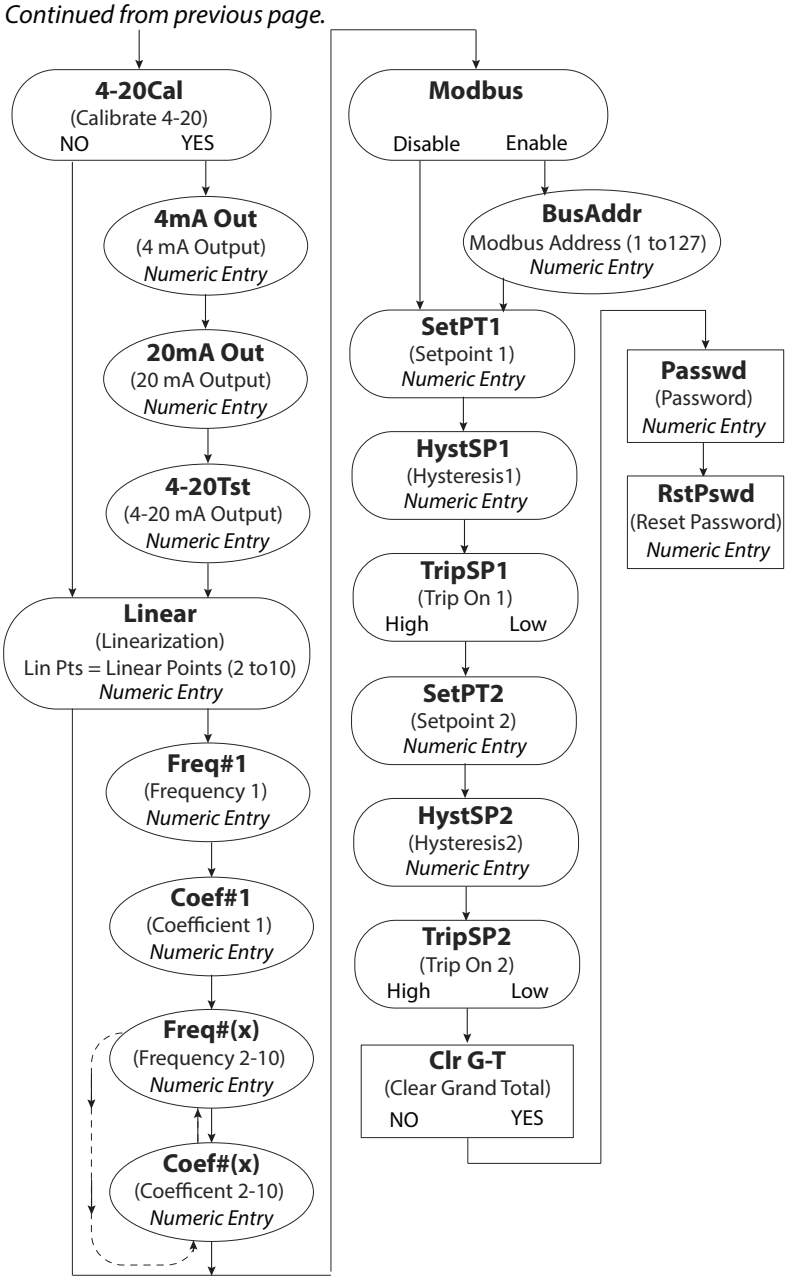

Gas

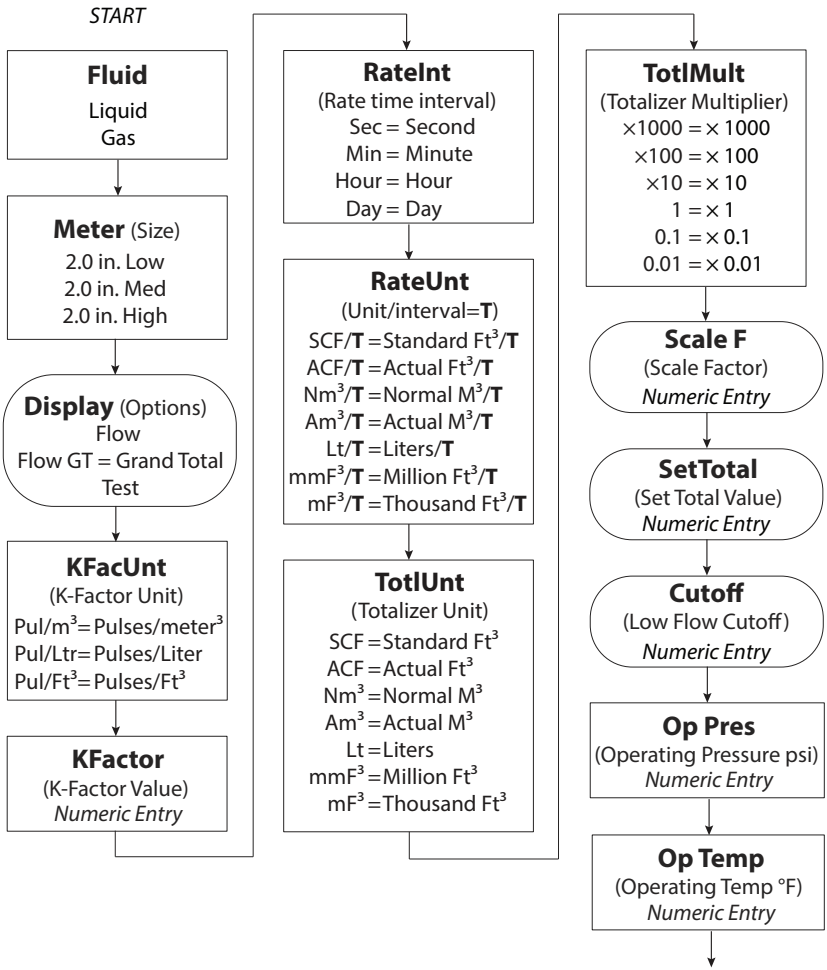

Continued on next page.

Shape Key

Basic Menu

Extended Menu

Sub Menu

Gas (continued)

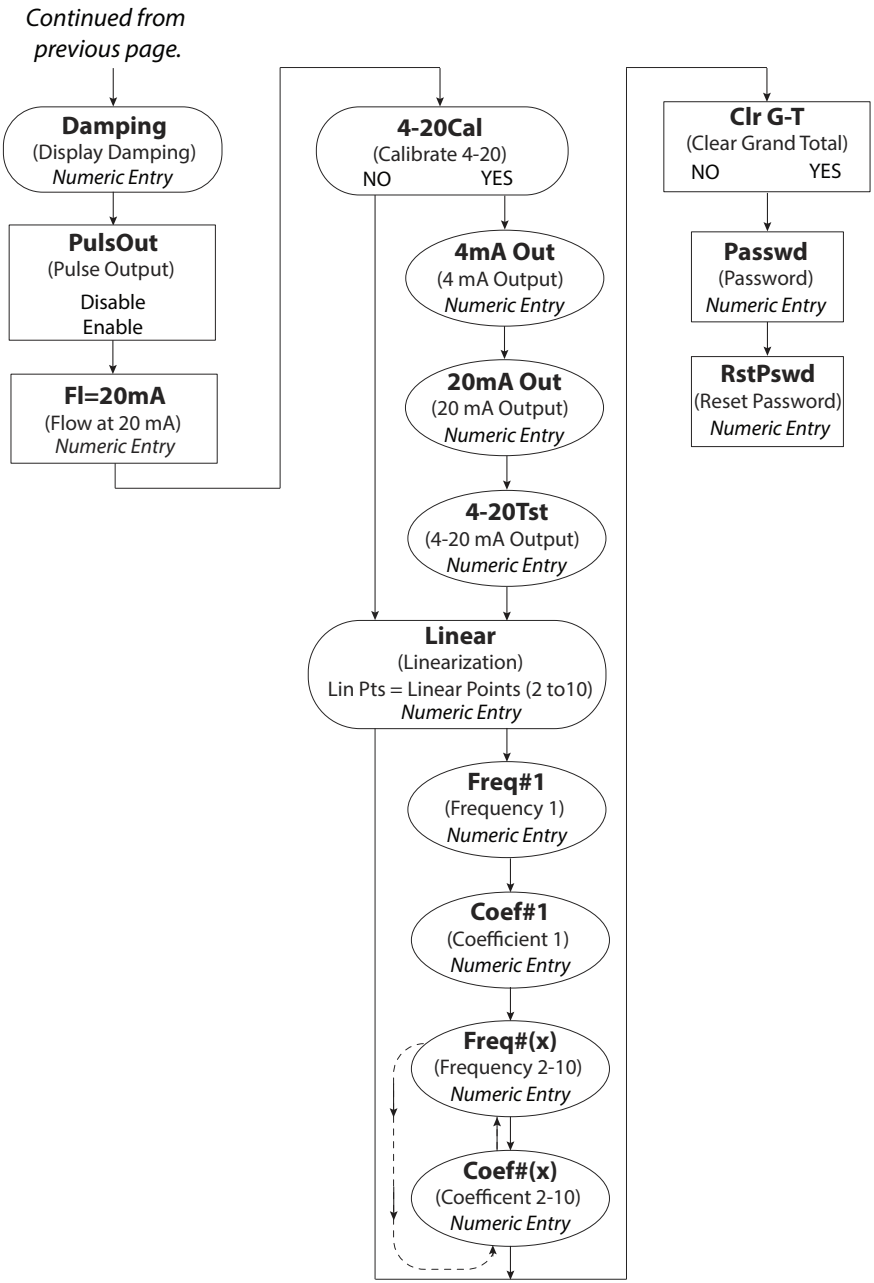

Advanced I/O Gas

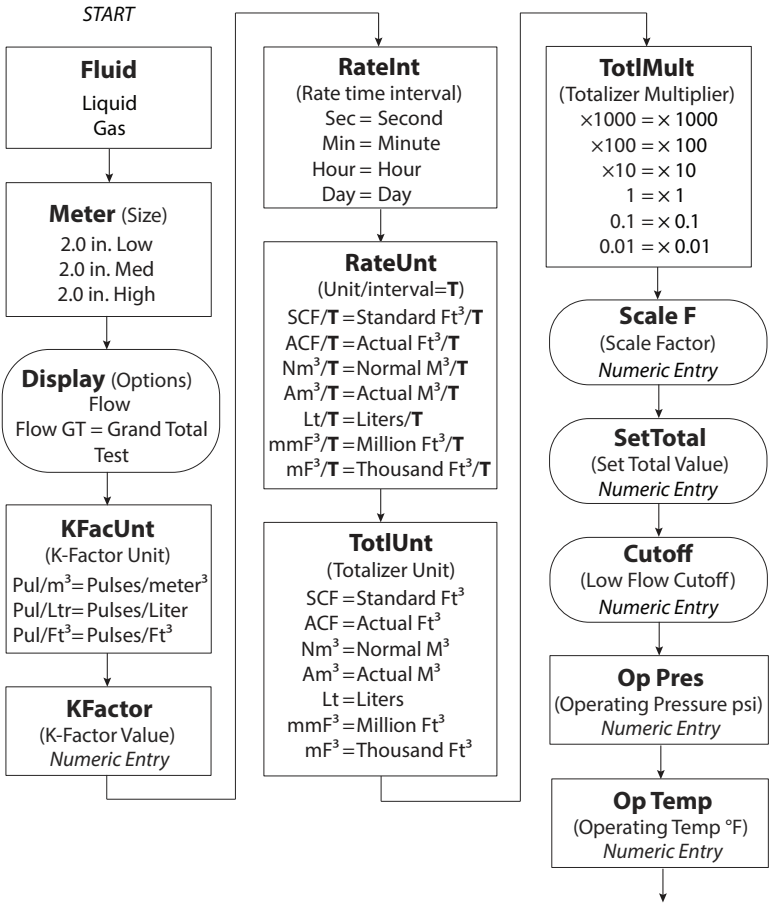

Continued on next page.

Shape Key

Basic Menu

Extended Menu

Sub Menu

Advanced I/O Gas (continued)

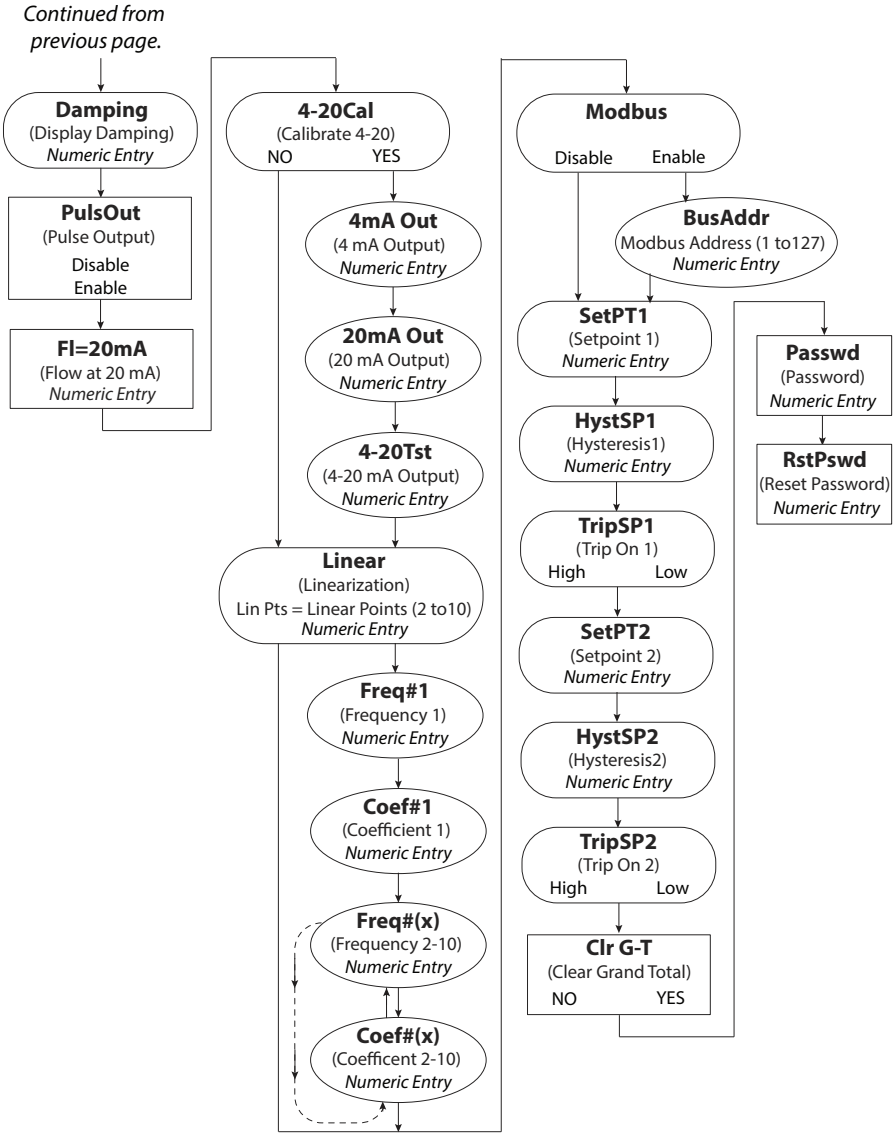

Liquid (Solar Powered)

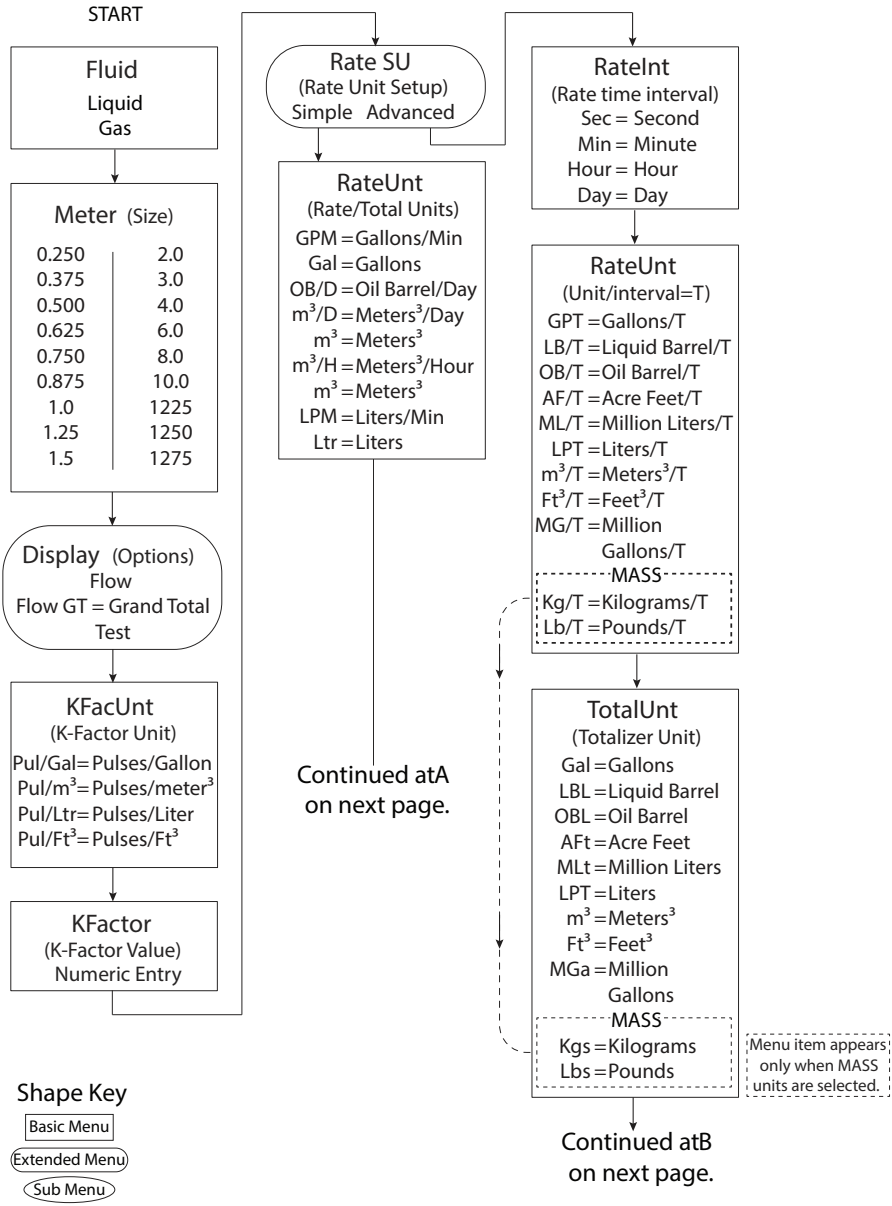

Liquid (Solar Powered) (continued)

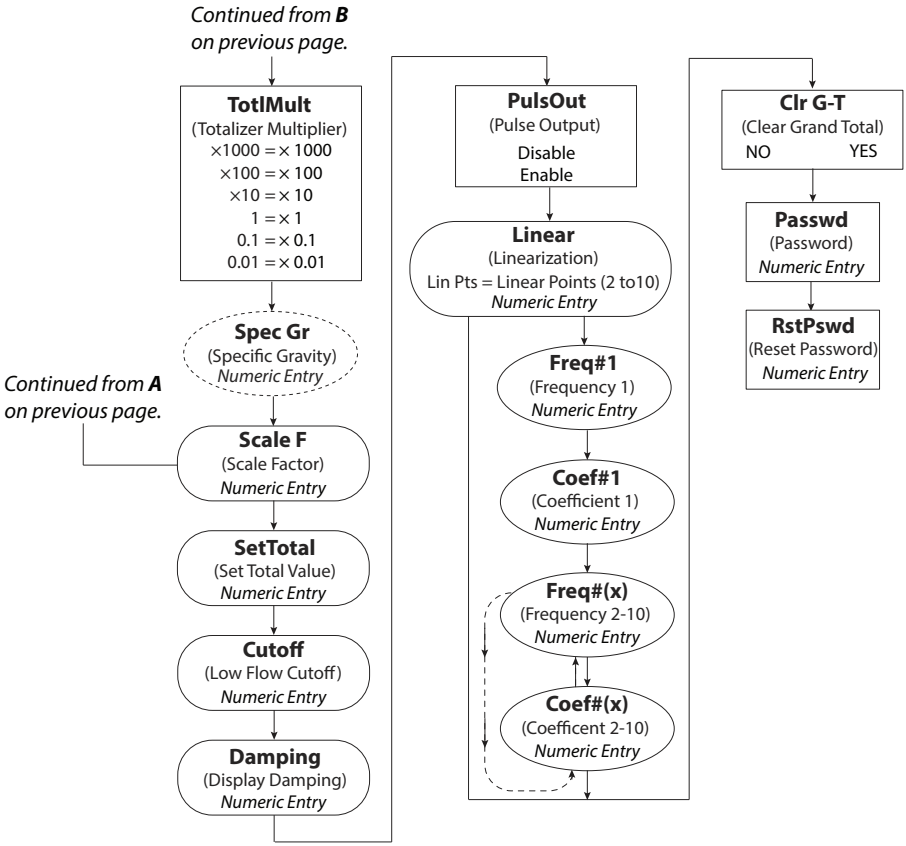

Gas (Solar Powered)

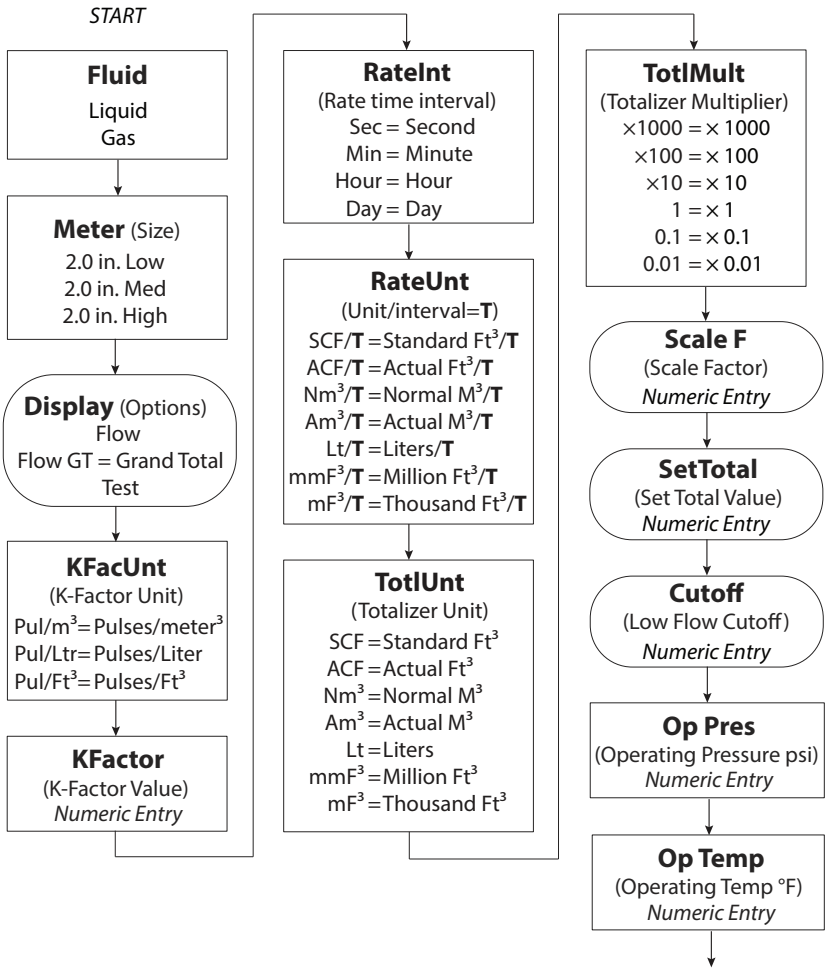

Continued on next page.

Shape Key

Basic Menu

Extended Menu

Sub Menu

Gas (Solar Powered) (continued)

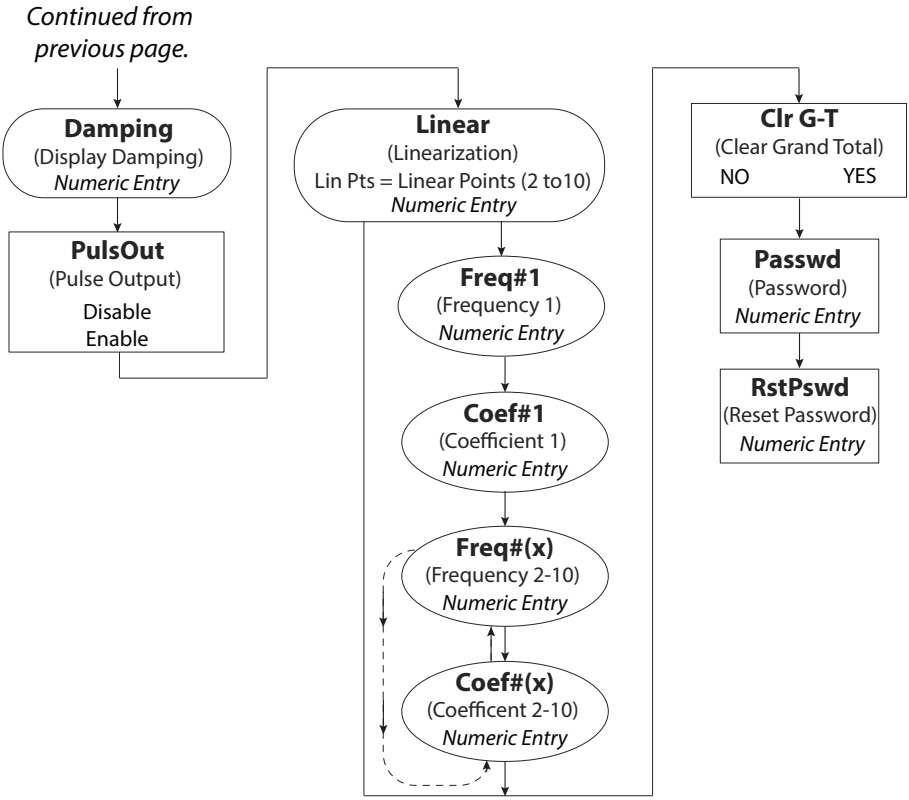

PROGRAMMING

The order of the following programming parameters assumes the meter is set for liquid. Parameters for gaseous fluids can be found in *"Gas" on page 38*.

NOTE: All of the following parameters appear in *Extended Programming* mode. Parameters with an asterisk (*) appear in *Programming* mode as well.

Saving Programmed Parameters

When navigating through the menus with the **ENTER** button, the programmed parameters are not permanently saved. Make sure to use the **MENU** button to save that information before leaving the meter.

IMPORTANT

*If the menu times out before the parameters are saved with the **MENU** button, all that programming information is lost. Make sure to save with the **MENU** button.*

Liquid

Select Fluid*

At the *Fluid* prompt, press **ENTER** to view the current fluid type. If the current fluid type is correct, press **ENTER** to advance to the next parameter. To change the fluid type, press **UP** or **RIGHT** to switch between *Liquid* or *Gas*. Press **ENTER** to advance to the *Meter* parameter.

Select Meter Size*

At the *Meter* prompt, press **ENTER** to display the current meter size. If the current meter size is correct, press **ENTER** to advance to the next parameter. To change the meter size, press **UP** or **RIGHT** to scroll to the correct meter size. Press **ENTER** to advance to the next parameter.

NOTE: The meter size selection refers to the bore of the meter and not the connections size. For a listing of the Blancett turbine bore sizes, see the default K-factor table in *"Default K-Factor Values" on page 39*.

NOTE: In *Programming* mode, the monitor advances to the *KFacUnit* parameter. See *"Select Meter's K-Factor Unit*" on page 26*.

Select Display Function

The B2900 monitor has three display settings, *Flow*, *Grand Total* and *Test*.

Flow

Use the *Flow* setting for normal operation of the monitor. In this mode, the display shows both the instantaneous flow rate and current total simultaneously. See *Figure 9*.

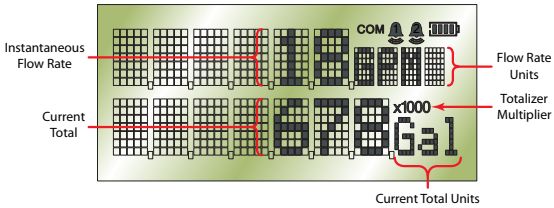

Figure 9: Instantaneous flow rate and current total

Grand Total

The *Flow-GT* setting forces the meter to alternate between the instantaneous flow and the grand total with roll-over counts. See *Figure 10*.

The grand total is the accumulation of all the fluid that has gone through the meter since the last time the grand total was cleared. This totalizer is in addition to the current total totalizer on the display and is always enabled.

In addition, the grand total screen displays the number of times the grand total has reached its maximum count (9,999,999) and rolled over to zero.

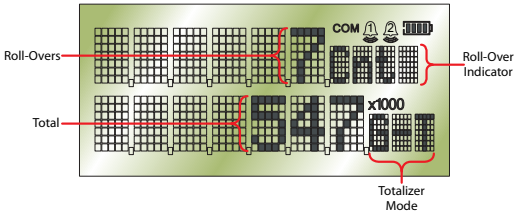

Figure 10: Grand total

Test

The *Test* setting places the monitor into a special diagnostic mode that shows the current input frequency and the accumulated input counts. *Figure 11* shows the layout for test mode values. The *Test* mode makes it possible for you to see the frequency input the monitor is measuring and is very useful in troubleshooting and noise detection.

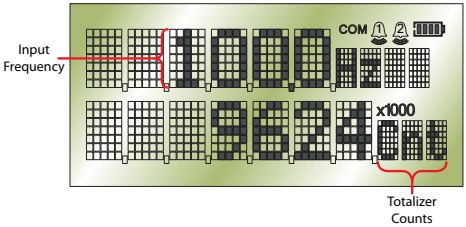

Figure 11: Test mode screen

At the *Display* prompt, press **ENTER** to view the current display setting. If the current display setting is correct, press **ENTER** to advance to the next parameter. To change the display setting, press **UP** or **RIGHT** to scroll through the display options. Press **ENTER** to advance to the *KFacUnit* parameter.

Select Meter's K-Factor Unit*

At the *KFacUnt* prompt, press **ENTER**. The display shows the current K-factor unit. If the current selection is correct, press **ENTER** to advance to the next parameter. To change the K-factor unit, press **UP** or **RIGHT** to scroll to the correct unit, the units should match the units that the meter was calibrated in. Press **ENTER** to advance to the *KFactor* parameter.

Enter Meter's K-Factor*

NOTE: The K-factor supplied with your meter, or calculated from calibration data, is needed to complete this step.

At the *KFactor* prompt, press **ENTER**. The most significant digit in the K-factor flashes. If the current K-factor is correct, press **ENTER** to advance to the next parameter. To change the K-factor, press **UP** to increment the digit until it matches the meter's first K-factor digit. Press **RIGHT** to advance to the next digit. Repeat this process until all K-factor digits have been entered. Press **ENTER** to accept the K-factor and advance to the *RateInt* parameter.

NOTE: The number of digits available before and after the decimal point is determined by the bore size of the flow sensor being used. The largest K-factors are associated with the smallest bore sizes. The maximum allowable K-factor is 99999.9. The minimum must be at least 1.000. If an out of range number is entered, the display flashes Limit and refuses the entry.

Select Rate Interval*

At the *RateInt* prompt, press **ENTER**. The monitor flashes the current time interval. If the current selection is correct, press **ENTER** to advance to the next parameter. To change to an alternate time interval, press **UP** or **RIGHT** to scroll to the required time interval. Press **ENTER** to advance to the *RateUnt* parameter.

Select Flow Rate Units*

At the *RateUnt* prompt, press **ENTER**. The monitor flashes the current rate unit. If the current selection is correct, press **ENTER** to advance to the next parameter. To change to an alternate unit, press **UP** or **RIGHT** to scroll to the required rate unit and press **ENTER** to advance to the *TotlUnt* parameter.

Select Total Units of Measure*

At the *TotlUnt* prompt, press **ENTER**. The monitor flashes the current total units. If the current selection is correct, press **ENTER** to advance to the next parameter. To change to an alternate unit, press **UP** or **RIGHT** to scroll to the required totalization unit. Press **ENTER** to advance to the *TotlMul* parameter.

Select Total Multiplier*

This parameter displays the accumulated flow total in multiples of 10. For example, if the optimum totalization unit is 1000 gallons, the unit total display increments by one digit for every 1000 gallons monitored. In Run mode, at 1000 gallons the total monitor reads 1, at 3000 gallons, the total display reads 3. This feature eliminates having to look at a total, count the digits, and mentally insert commas for each 1000 multiple.

At the *TotlMul* prompt, press **ENTER** . The monitor shows the current total multiplier. If the selection is correct, press **ENTER** to advance to the next parameter. To change to an alternate multiplier, press **UP** or **RIGHT** to scroll to the required multiplier unit and press **ENTER** to advance to the next parameter.

If the *RateUnt* or *TotlUnt* parameter has been set to pounds or kilograms, the monitor advances to the *Spec Gr* parameter. At any other setting, the monitor advances to *PulsOut* in Programming mode. See *"Totalizer Pulse Output*" on page 30*.

*Enter Specific Gravity Value**

Mass readings in the B2900 monitor are not temperature or pressure compensated so it is best to enter the specific gravity of the fluid as close to the system running temperature as possible. As liquids are essentially incompressible, pressure compensation is not necessary for liquids.

At the *Spec Gr* prompt, press **ENTER**. The most significant digit of the current specific gravity flashes. If the current specific gravity is correct, press **ENTER** to advance to the next parameter. To change to an alternate specific gravity, press **UP** to increment the flashing digit until you reach the first digit of the new specific gravity. Press **RIGHT** to move to the next digit. When all digits have been entered, press **ENTER** to advance to the next parameter.

NOTE: If *Gas* was chosen as the fluid, see *"Gas" on page 38* and follow the directions for the gas parameters.

In *Programming* mode, the monitor advances to the *PulsOut* parameter, see *"Totalizer Pulse Output*" on page 30*.

Enter a Scale Factor

The scale factor is used to force a global span change. For example, in *Run* mode, the display is reading a consistent three percent below the expected values at all flow rates. Rather than changing the K-factor and linearization parameters individually, the scale factor can be set to 1.03 to correct the readings. The range of scale factors is from 0.10…5.00. The default scale factor is 1.00.

At the *Scale F* prompt, press **ENTER**. The first digit of the existing scale factor flashes. If the current selection is correct, press **ENTER** to advance to the next parameter. To change to an alternate scale factor, press **UP** to increment the display digit until it matches the first digit of the new scale factor. Press **RIGHT** to advance to the next digit. Repeat for all digits. Press **ENTER** to advance to the *SetTotl* parameter.

NOTE: If the number you enter is out of range, the display flashes *Limit* and refuses the entry.

Preset Total

The preset total parameter sets the totalizer to a predetermined amount. The preset can have seven digits up to 8,888,888.

At the *SetTotl* prompt, press **ENTER**. The monitor displays the current set total. If the set total is correct, press **RIGHT** to advance to the next parameter. To change the set total, press **ENTER** again. The first digit of the current preset total flashes. Press **UP** to increment the display digit until it matches the first digit of the correct preset. Press **RIGHT** to advance to the next digit. Repeat for all digits. Press **ENTER** to advance to the *Cutoff* parameter.

NOTE: If the number you enter is out of range, the display flashes *Limit* and refuses the entry.

Low Flow Cutoff

The flow cutoff shows low flow rates (that can be present when pumps are off and valves are closed) as zero flow on the flow monitor. A typical value would be about five percent of the flow sensor's maximum flow.

Enter the low flow cutoff as an actual flow value. For example, if the maximum flow rate for the flow sensor was 100 gpm, set the low flow cutoff value to 5.0.

At the *Cutoff* prompt, press **ENTER**. The first digit of the current low flow cutoff flashes. If the current selection is correct, press **ENTER** to advance to the next parameter. To change the low flow cutoff, press **UP** to increment the display digit until it matches the first digit of the new low flow cutoff value. Press **RIGHT** to advance to the next digit. Repeat for all digits. Press **ENTER** to advance to the *Damping* parameter.

NOTE: If the number you enter is out of range, the display flashes *Limit* and refuses the entry.

NOTE: If the fluid being measured is set to *Gas*, the monitor advances to *Op Pres* in *Extended Programming* mode. See *"Gas" on page 38*.

Damping Factor

The damping factor is increased to enhance the stability of the flow readings. Damping values are decreased to allow the monitor to react faster to changing values of flow. This parameter can be any value between 0…99 %, with 20 being the default.

At the *Damping* prompt, press **ENTER**. The most significant digit of the current setting flashes. If the current selection is correct, press **ENTER** to advance to the next parameter. To change the damping value, press **UP** to increment the display digit until it matches the new damping value. Press **RIGHT** to advance to the next digit. Press **ENTER** to advance to the *PulsOut* parameter.

Totalizer Pulse Output*

The *PulsOut* parameter can be *Enabled* or *Disabled*. When *Enabled*, the output generates a fixed width 30 mS duration, pulse every time the least significant digit of the totalizer increments. The amplitude of the pulse is dependent on the voltage level of the supply connected to the pulse output and is limited to a maximum 28V DC.

The B2900 monitor provides two types of totalizer pulses. The basic open drain FET output, *Figure 12*, provides a ground referenced output pulse that swings between about 0.7V DC and V_{CC}.

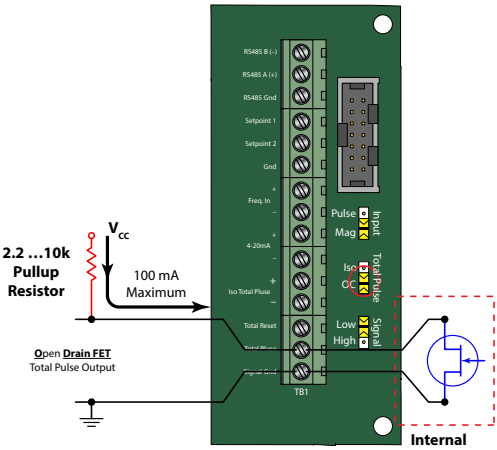

Figure 12: Open drain connections (NEMA 4X)

The isolated pulse output (ISO), *Figure 13*, is an open collector output with the emitter of the transistor connected to the negative output terminal and is not referenced to ground. This output is optically isolated from the input signal for systems that require a totally isolated output pulse.

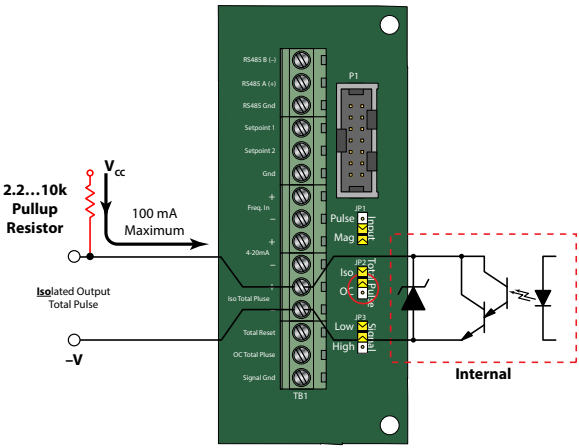

Figure 13: Opto-isolated open collector connections (NEMA 4X)

Both outputs have a maximum current capacity of 100 mA and require a pullup resistor. The value of the pullup resistor is dependent on the supply voltage and the maximum current required by the load device.

Flow at 20 mA

This setting normally represents the maximum rate of the flow sensor connected to the display, but other entries are possible.

At the *Fl=20mA* prompt, press **ENTER**. The first digit of the current setting flashes. If the current setting is correct, press **ENTER** to advance to the next parameter. If the current setting requires a change, press **UP** to increment the display digit until it matches the first digit of the required maximum flow value. Press **RIGHT** to advance to the next digit. Repeat for all of the maximum flow at 20 mA digits. Press **ENTER** to advance to the *4-20Cal* parameter.

In *Programming* mode, the monitor advances to the *Clr G-T* parameter. See *"Clear Grand Total" on page 37*.

4…20 mA Calibration

This setting allows the fine adjustment of the Digital to Analog Converter (DAC) that controls 4…20 mA output. If the output needs to be adjusted for any reason the 4…20 mA calibration procedure is used.

At the *4-20Cal* prompt, press **ENTER**. The monitor displays No. If you do not need to complete the 4…20 calibration, press **ENTER** to advance to the *Linear* parameter. See *"Linearization" on page 32*. To complete the 4…20 calibration, press **UP** or **RIGHT** to change the display to *Yes*. Press **ENTER** to advance to the 4mA Out parameter.

The DAC used in the B2900 monitor is an twelve bit device. The valid entries are 0…4095.

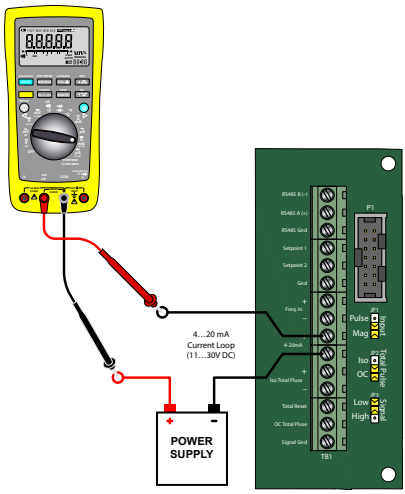

Figure 14: 4…20 mA calibration setup

4 mA Adjustment

To set the 4 mA value, connect an ammeter in series with the loop power supply as shown in *Figure 14 on page 31*. The 4 mA DAC setting is typically 35…50. At the *4mA Out* prompt, press **UP** to increase or **RIGHT** to decrease the current output while monitoring the ammeter. When a steady 4 mA reading is established on the ammeter, press **ENTER** on the monitor to save the output and advance to the *20mAOut* parameter.

20 mA Adjustment

The 20 mA adjustment is performed using the same procedure as the 4 mA adjustment.

4…20 mA Test

The 4…20 mA test simulates the mA output values between 4…20 to check output tracking. At the *4-20 Test* prompt the current output flashes. Press **UP** to increase the simulated mA output or **RIGHT** to decrease in increments of 1 mA. The ammeter should track the simulated mA output. If a 4…20 mA test is not necessary, press **ENTER** to advance to the *Linear* parameter.

NOTE: Pressing **ENTER** when the monitor is in *Test* mode exits the test mode and moves on to the next programming parameter.

Linearization

To increase accuracy, linearize the monitor. The linearization function accepts a maximum of ten points and requires additional calibration data from the meter being used with the monitor. Typically, calibration information can be obtained in three, five and ten points from the flow meter's manufacturer. If linearization is not needed, press **RIGHT** to advance to the Modbus parameter. See *"Modbus" on page 33*. To complete linearization, press **ENTER** at the *Linear* prompt. The meter advances to the *Lin Pts* parameter.

Number of Points

The Lin Pts value displays. If the number of points is set to 0, linearization is disabled. Press **ENTER**. The most significant digit of the number of points entry begins to flash. The first number can be 1 or 0 only. Press **UP** to change the first digit. Press **RIGHT** to move to the least significant digit.

NOTE: If the number you enter is out of range, the display flashes *Limit* and refuses the entry.

Press **ENTER** to advance to the *Freq#1* prompt.

NOTE: If the number of linear points is set to 1 the B2900 monitor assumes you are entering the maximum frequency and coefficient. Further, the meter assumes that the implied first point is at a frequency of 0 Hz and a coefficient of 0.

Frequency

At the *Freq#1* prompt, press **ENTER**. The first digit of the first linear point's frequency input flashes. Press **UP** to increment the numerical values and **RIGHT** to change the position of the number being entered. When the frequency value input is complete, press **ENTER** to advance to the *Coef#1* parameter.

Coefficient

The coefficient is the value applied to the nominal K-factor to correct it to the exact K-factor for that point. The coefficient is calculated by dividing the average (nominal) K-factor for that point by the actual K-factor for the flow meter.

$$\text{Linear Coefficient} = \frac{\text{Nominal K-Factor}}{\text{Actual K-Factor}}$$

At the *Coef#1* prompt, press **ENTER**. The first digit of the coefficient flashes. Press **UP** to increment the digit, and **RIGHT** to move to the next digit. When all digits have been entered, press **ENTER** to advance to the next frequency input.

Continue entering pairs of frequency and coefficient points until all data has been entered. Press **ENTER** to advance to the Modbus parameter.

NOTE: The frequency values must be entered in ascending order. If a lower frequency value is entered after a higher value, the B2900 monitor flashes *Limit* followed by the minimum frequency value acceptable to the display.

Example:

The following is actual data taken from a one inch turbine flow sensor calibrated with water.

Unit Under Test (UUT) Calibration Data Table In GPM					
Actual	**UUT Frequency**	**UUT Actual K-factor**	**(Hz x 60) Nominal K**	**Linear Coefficient**	**Raw Error**
50.02 gpm	755.900 Hz	906.72 counts/ US gal	49.72 gpm	1.0060	0.59%
28.12 gpm	426.000 Hz	908.96 counts/ US gal	28.02 gpm	1.0035	0.35%
15.80 gpm	240.500 Hz	913.29 counts/ US gal	15.82 gpm	0.9987	–0.13%
8.88 gpm	135.800 Hz	917.57 counts/ US gal	8.93 gpm	0.9941	–0.59%
4.95 gpm	75.100 Hz	910.30 counts/ US gal	4.94 gpm	1.0020	0.20%
Nominal K (NK)		912.144		—	—

Table 1: Sample linearization data

In this example, the linear coefficient has already been calculated by the calibration program so all that is required is to enter 5 into the number of linear points *Lin Pts* parameter and then enter, in order, the five frequency, linear coefficient data pairs.

Modbus

The Modbus output parameter can be enabled or disabled. When enabled, communications with the B2900 monitor are completed using the Modbus RTU protocol. See *"Modbus Interface" on page 44* for additional information.

At the *Modbus* prompt, press **ENTER**. The current state of the Modbus output is shown. If the current state is correct, press **ENTER** to advance to the next parameter. To change the modbus setting, press **UP** or **RIGHT** to toggle between states. When the proper state displays, press **ENTER** to advance to the *BusAddr* parameter.

Bus Address

If the Modbus output is enabled, you must choose a valid Modbus address. Every device communicating over the RS485 communications bus using the Modbus protocol must have a unique bus address. Address values range from 0…127 with 0 being the default.

At the *BusAddr* prompt, press **ENTER**. The first digit of the address flashes. If the current setting is correct, press **ENTER** to advance to the next parameter. To change the address, press **UP** to increment the display digit until it matches the first digit of the new bus address. Press **RIGHT** to advance to the next digit. Repeat for all digits of the address. Press **ENTER** to accept the new address and advance to the *Baud* parameter.

Baud

If Modbus is being used, all devices connected to the bus must have the same baud rate setting. Baud is expressed as 'bits per second' and defines the data transmission speed of the network. The B2900 monitor can be changed to use any of the following baud rates: 9600, 19200, 38400, 57600 and 115200. See *"Modbus Interface" on page 44* for additional information.

At the *Baud* prompt, press **ENTER**. The current state of the Baud rate is shown and defaults to 9600. If the current state is correct, press **ENTER** to advance to the next parameter. To change the baud rate setting, press **UP** or **RIGHT** to scroll through the options. When the proper state displays, press **ENTER** to advance to the *SetPt1* parameter.

Set Points

Set points allow the meter to signal when a specific flow condition has been achieved. They are commonly used to indicate high or low flow conditions that need attention. The B2900 monitor has two open collector outputs controlled by the set point function.

The set point transistors have the same current limitations and setup requirements as the totalizing pulse output transistors described previously. See *Figure 12 on page 30* and *Figure 13 on page 30*.

Both set point one and set point two are configured using the same procedures but the hysteresis and tripping conditions are independently set for each set point output.

NOTE: In most instances, the current capacity of an open collector transistor is not sufficient to operate old style counters that relied on relay contact closures. When used with basic counting circuits, a solid-state relay is needed.

Set Point 1

The set point is the flow value at which the output transistor changes state. It is set using the same units as the rate units.

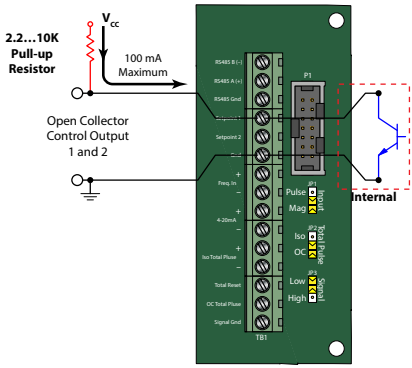

Figure 15: Set point output (NEMA 4X)

At the *SetPt 1* prompt, press **ENTER**. The most significant digit of the current setting flashes. If the current setting is correct, press **ENTER** to advance to the next parameter. To change the current setting, press **RIGHT** to advance to the first digit of the required set point value. Press **UP** to increment the digit until it matches the first number of the required set point. Repeat for all the digits the set point. Press **ENTER** to accept the new set point and advance to the *HystSP1* parameter.

Hysteresis 1

The hysteresis parameter modifies how the output transistor reacts around a set point and prevents an output from turning on and off rapidly when the programmed flow rate is at, or very near, the set point.

For example, a low flow alarm is set to activate when the flow falls below a pre-programmed point. When the flow is reduced to the set point, even small changes of flow above the set point turn the output off, disabling the alarm. Without hysteresis, if the flow rate fluctuates slightly above and below the set point, the output rapidly cycles between on and off states. See *Figure 16 on page 36*. The hysteresis value is set using the same units as the rate units.

At the *HystSP1* prompt, press **ENTER**. The most significant digit of the current setting flashes. If the current setting is correct, press **ENTER** to advance to the next parameter. To change the current setting, press **RIGHT** to advance to the first digit of the new hysteresis value. Press **UP** to increment the digit until it matches the first number of the new hysteresis. Repeat for all the digits of the hysteresis and then press **ENTER** to advance to the *TripSP1* parameter.

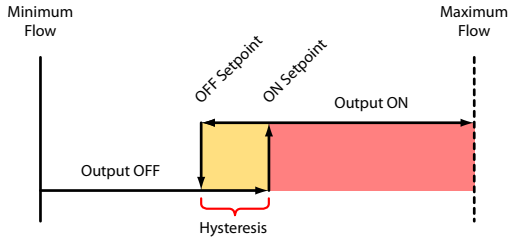

Figure 16: Set point actions

NOTE: Neither the set point nor the hysteresis values are checked for compatibility with the meter size. Check the values to prevent the outputs from working unexpectedly.

Trip SP 1

The trip parameter can be set for either *High* or *Lo*. When set to *High*, the open collector transistor stops conducting and sends the output high when the set point is reached. The output will not go low again until the flow rate falls below the set point minus the hysteresis value. When set to *Lo*, the open collector transistor starts conducting and sends the output low when the set point is reached. The output will not go high again until the flow rate exceeds the set point plus the hysteresis value.

For example, if the set point is 10 gpm, the hysteresis is set to 2 gpm and the trip set point is set to *High*. See *Figure 17*. When the flow goes above 10 gpm, the OC transistor stops conducting and the output goes high. The output stays high until the flow rate drops below 8 gpm, which is the set point (10 gpm) minus the hysteresis (2 gpm).

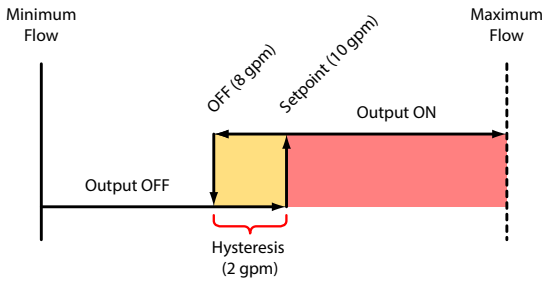

Figure 17: Set point example

At the *TripSP1* prompt, press **ENTER**. The current tripping condition setting displays. If the current setting is correct, press **ENTER** to advance to the next parameter. If the current setting requires a change, press **UP** or **RIGHT** to change to the alternate choice. Press **ENTER** to advance to the *SetPt 2* parameter.

The *SetPt 2*, *HystSP2* and *TripSP2* parameters are set using the same procedures as the *SetPt 1*, *HystSP1* and *TripSP1* parameters. When these parameters have been entered, the monitor advances to the *Clr G-T* parameter.

Clear Grand Total

At the *Clr G-T* prompt, press **ENTER**. The monitor displays *No* on the screen. To clear the grand total, press **UP** or **RIGHT** to change from *No* to *Yes*. Press **ENTER** to advance to the *Passwd* parameter.

The totalizer can also be reset using a hardware reset, as shown in *Figure 18* or by pressing **MENU** and **ENTER** simultaneously.

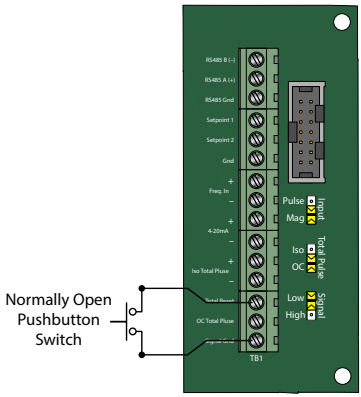

Figure 18: NEMA 4X hardware reset

Password

The password setting restricts access to the *Programming* and *Extended Programming* modes. Initially, the password is set to all zeros and any user can modify the parameter settings. To change the password, press **ENTER** at the *Passwd* prompt. The first digit flashes. Press **UP** to increment the digit and **RIGHT** to advance to the next digit. After entering all digits, press **ENTER** to store the password and advance to *RstPswd*. The new password is now required to enter either programming mode. With this password set, any user is able to reset the stored totals on the monitor.

Reset Password

The reset password parameter restricts resetting the totals on the monitor. The *Password* must also be set to restrict the total reset. Initially, the password is set to all zeros and any user can reset the stored totals on the monitor. To change the password, press **ENTER** at the *RstPswd* prompt. The first digit flashes. Press **UP** to increment the digit and **RIGHT** to advance to the next digit. After entering all digits, press **ENTER** to store the password and return to the *Fluid* parameter. The reset password is now required to reset the totals on the monitor.

NOTE: Entering a password in the *Passwd* screen and leaving the password blank in the *RstPswd* screen allows for total resets (not requiring a password), but restricts programming modification.

Gas

Operating Pressure

At the *Op Pres* prompt, press **ENTER**. The first digit of the current pressure setting flashes. If the current selection is correct, press **ENTER** to advance to the next parameter. To change the operating pressure, press **UP** to increment the digit until it matches the first digit of the correct pressure value. Press **RIGHT** to move to the next digit. When all the digits have been entered, press **ENTER** to advance to the *Op Temp* parameter.

Operating Temperature

At the *Op Temp* prompt, press **ENTER**. The first digit of the current temperature setting flashes. If the current selection is correct, press **ENTER** to advance to the next parameter. To change the operating temperature, press **UP** to increment the digit until it matches the first digit of the correct pressure value. Press **RIGHT** to move to the next digit. When all the digits have been entered, press **ENTER** to advance to the next parameter.

In *Programming* mode the monitor advances to the *PulsOut* parameter, see *"Totalizer Pulse Output*" on page 30*.

In *Extended Programming* mode, the monitor advances to the *Damping* parameter, see *"Damping Factor" on page 29*.

Save Settings and Return to Run Mode

After entering all parameters, press **MENU**. Saving displays on the menu, followed by a blank screen and then the firmware version number. The monitor then returns to *Run* mode.

IMPORTANT

*Settings are not saved until after manually saving with the **MENU** button.*

TROUBLESHOOTING GUIDE

Trouble		Remedy
No LCD Display	Battery	Check battery voltage. Should be 3.6V DC. If the input is 3.4V DC or lower, replace the battery.
	Loop Power	Check 4…20 mA input. Voltage must be within the minimum and maximum supply voltage and capable of supplying enough current to run the display. The input voltage is checked across, or in parallel with, the 4…20 mA terminals. Current is checked with the ammeter in series with the 4…20 mA output.
No Rate or Total Displayed		Check connection from meter pickup to display input terminals. Check turbine meter rotor for debris. Rotor should spin freely. Check programming of flow monitor.
Flow Rate Display Interprets Reading Constantly		This is usually an indication of external noise. Keep all AC wires separate from DC wires. Check for large motors close to the meter pick-up. Check for radio antenna in close proximity. Try disconnecting the pick-up from the monitor pig tail. This should stop the noise.
Flow Rate Indicator Bounces		This usually indicates a weak signal. Replace pick-up and/or check all connections. Examine K-factor.

DEFAULT K-FACTOR VALUES

Liquids			
Meter Bore Size	**Default K-factor**	**Lower Limit**	**Upper Limit**
0.375	20,000	16,000	24,000
0.500	13,000	10,400	15,600
0.750	2750	2200	3300
0.875	2686	2148	3223
1.000	870.0	696.0	1044
1.500	330.0	264.0	396.0
2.000	52.0	41.6	62.0
3.000	57.0	45.6	68.0
4.000	29.0	23.2	35.0
6.000	7.0	5.6	8.0
8.000	3.0	2.4	4.0
10.000	1.6	1.3	2.0

Gas	
Meter Range	**Default K-factor**
Low	325
Medium	125
High	80

BATTERY REPLACEMENT

Battery powered monitors use a single 3.6V DC, D size lithium battery. When replacement is necessary, use a clean, fresh battery for continued trouble-free operation.

Replacement Batteries	
Manufacturer	**Part Number**
Blancett	B300028
Xeno	S11-0205-10-03
Tadiran	TL-5930/F

Table 2: Replacement batteries

1. Unscrew the two captive screws on the front panel to gain access to the battery.
2. Press the tab on the battery connector to release it from the circuit board.
3. Remove the old battery and replace it with new one.
4. Re-fasten the front panel.

NOTE: The battery is held in place with a wire-tie that will need to be cut and replaced (see *Figure 19*). The approval on the product requires the wire-tie.

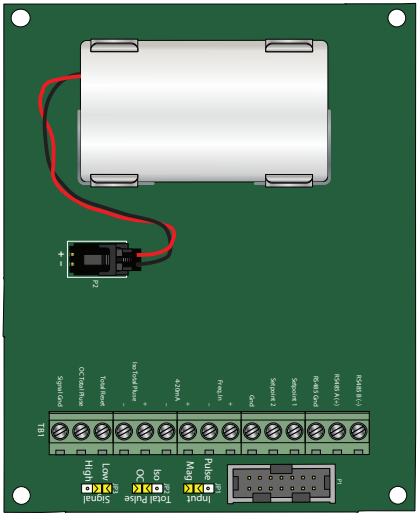

Figure 19: NEMA 4X battery replacement

K-FACTORS EXPLAINED

The K-factor (with regard to flow) is the number of pulses that must be accumulated to equal a particular volume of fluid. You can think of each pulse as representing a small fraction of the totalizing unit.

An example is a K-factor of 1000 (pulses per gallon). This means that if you were counting pulses, when the count total reached 1000, you would have accumulated one gallon of liquid. Using the same reasoning, each individual pulse represents an accumulation of 1/1000 of a gallon. This relationship is independent of the time it takes to accumulate the counts.

The frequency aspect of K-factors is a little more confusing because it also involves the flow rate. The same K-factor number, with a time frame added, can be converted into a flow rate. If you accumulated 1000 counts (1 gallon) in one minute, then your flow rate would be 1 gpm. The output frequency, in Hz, is found by dividing the number of counts (1000) by the number of seconds in a minute (60) to get the output frequency.

$1000 \div 60 = 16.6666$ Hz.

If you were looking at the pulse output on a frequency counter, an output frequency of 16.666 Hz would be equal to 1 gpm. If the frequency counter registered 33.333 Hz (2×16.666 Hz), then the flow rate would be 2 gpm.

Finally, if the flow rate is 2 gpm, then the accumulation of 1000 counts would take place in 30 seconds because the flow rate that the 1000 counts is accumulated, is twice as great.

Calculating K-factors

Many styles of flow meters are capable of measuring flow in a wide range of pipe sizes. Because the pipe size and volumetric units the meter will be used on varies, it may not be possible to provide a discrete K-factor. In the event that a discrete K-factor is not supplied, then the velocity range of the meter is usually provided along with a maximum frequency output.

The most basic K-factor calculation requires that an accurate flow rate and the output frequency associated with that flow rate be known.

Example 1

Known values are:

Frequency	=	700 Hz
Flow Rate	=	48 gpm

$$700 \text{ Hz} \times 60 \text{ sec} = 42{,}000 \text{ pulses per min}$$

$$\text{K-factor} = \frac{42{,}000 \text{ pulses per min}}{48 \text{ gpm}} = 875 \text{ pulses per gallon}$$

Example 2

Known values are:

Full Scale Flow Rate	=	85 gpm
Full Scale Output Frequency	=	650 Hz

650 Hz × 60 sec = 39,000 pulses per min

$$\text{K-factor} = \frac{39{,}000 \text{ pulses per min}}{85 \text{ gpm}} = 458.82 \text{ pulses per gallon}$$

The calculation is a little more complex if the velocity is used because you first must convert the velocity into a volumetric flow rate to be able to compute a K-factor.

To convert a velocity into a volumetric flow, the velocity measurement and an accurate measurement of the inside diameter of the pipe must be known as well as one US gallon of liquid is equal to 231 cubic inches.

Example 3

Known values are:

Velocity	=	4.3 ft/sec
Inside Diameter of Pipe	=	3.068 in.

Find the area of the pipe cross section.

$$\text{Area} = \pi r^2$$

$$\text{Area} = \pi \left(\frac{3.068}{2}\right)^2 = \pi \text{ x } 2.35 = 7.39 \text{ in}^2$$

Find the volume in one foot of travel.

$$7.39 \text{ in}^2 \text{ x } 12 \text{ in. (1 ft)} = \frac{88.71 \text{in}^2}{\text{ft}}$$

What portion of a gallon does one foot of travel represent?

$$\frac{88.71 \text{ in}^3}{231 \text{ in}^3} = 0.384 \text{ gallons}$$

So for every foot of fluid travel 0.384 gallons will pass.

What is the flow rate in gpm at 4.3 ft/sec?

0.384 gallons × 4.3 FPS × 60 sec (1 min) = 99.1 gpm

Now that the volumetric flow rate is known, all that is needed is an output frequency to determine the K-factor.

Known values are:

Frequency	=	700 Hz (By measurement)
Flow Rate	=	99.1 gpm (By calculation)

700 Hz × 60 sec = 42,000 pulses per gallon

$$\text{K-factor} = \frac{42{,}000 \text{ pulses per min}}{99.1 \text{ gpm}} = 423.9 \text{ pulses per gallon}$$

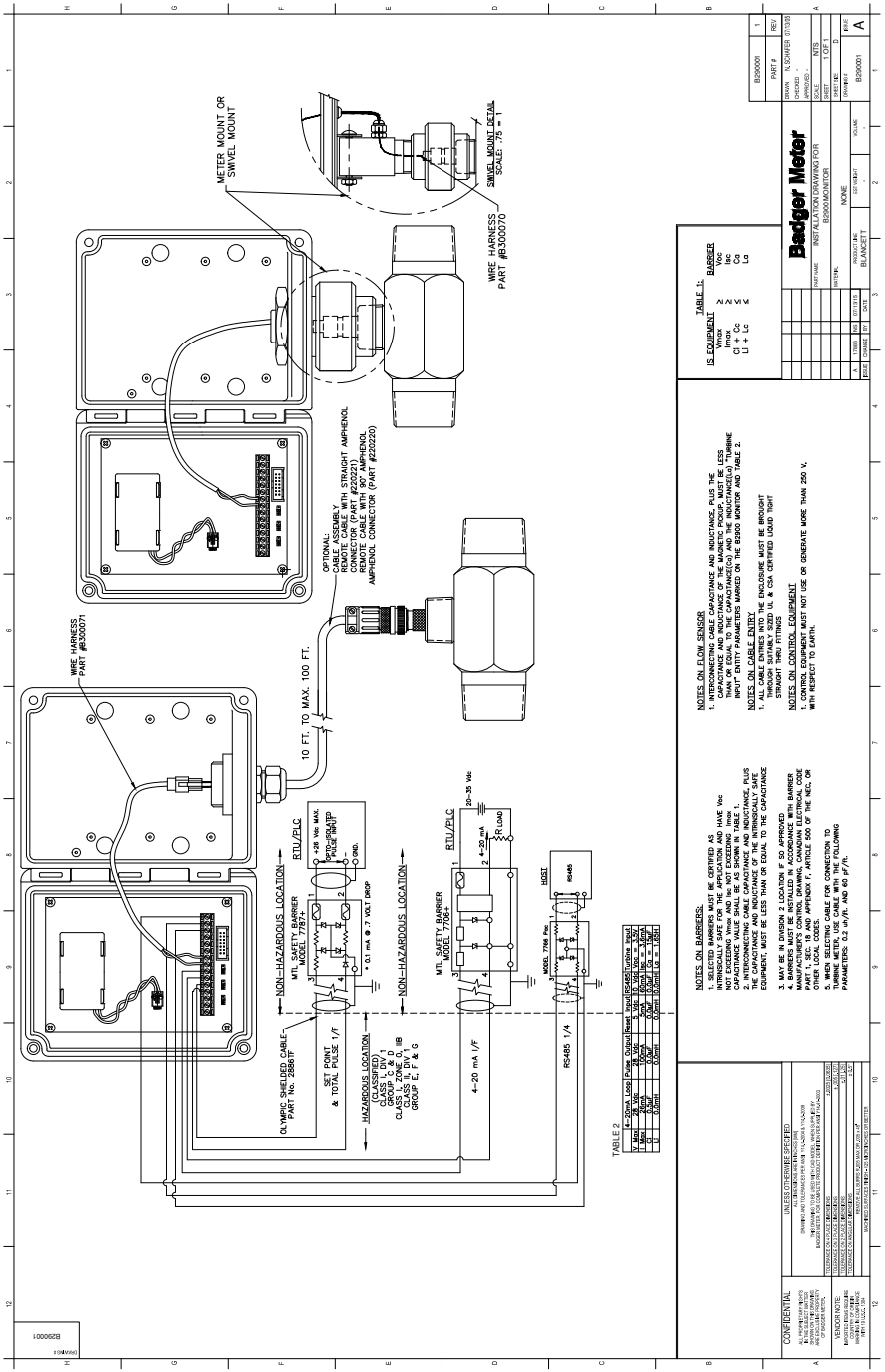
METER MOUNT OR SWIVEL MOUNT
SWIVEL MOUNT DETAIL SCALE: .75 = 1
WIRE HARNESS PART #B300070
OPTIONAL: CABLE ASSEMBLY CONSISTING OF (1) STRAIGHT AMPHENOL CONNECTOR (PART #230221) REMOTE CABLE WITH 90° AMPHENOL AMPHENOL CONNECTOR (PART #230220)
WIRE HARNESS PART #B300071
10 FT. TO MAX. 100 FT.
NON-HAZARDOUS LOCATION
MTL SAFETY BARRIER MODEL 787+
RTU/PLC
2 - 24 Vdc MAX. PULSE INPUT
2 GND.
* 0.1 mA @ 7 VOLT DROP
OLYMPIC SHIELDED CABLE PART No. 28861F
SET POINT & TOTAL PULSE 1/F
HAZARDOUS LOCATION (CLASSIFIED) CLASS I, DIV 1 GROUP C & D CLASS II, DIV 1 GROUP E, F & G
MTL SAFETY BARRIER MODEL 770S+
20-35 Vdc
4-20 mA
R LOAD
4-20 mA 1/F
RS485 1/4
MODEL 7798 Pwr
HOST
RS485
TABLE 2
TABLE 1:
IS EQUIPMENT
BARRIER
Imax
Ic
Ci + Cc
Cg
Li + Lc
Lg
NOTES ON FLOW SENSOR
1. INTERCONNECTING CABLE CAPACITANCE AND INDUCTANCE, PLUS THE CAPACITANCE AND INDUCTANCE OF THE INTRINSICALLY SAFE EQUIPMENT, MUST BE LESS THAN OR EQUAL TO THE CAPACITANCE(Ci) AND THE INDUCTANCE(Li) "TURBINE INPUT" ENTITY PARAMETERS MARKED ON THE B2900 MONITOR AND TABLE 2.
NOTES ON CABLE ENTRY
1. ALL CABLE ENTERING INTO THE ENCLOSURE MUST BE BROUGHT THROUGH SUITABLY SIZED UL & CSA CERTIFIED LIQUID TIGHT STRAIGHT THRU FITTINGS
NOTES ON CONTROL EQUIPMENT
1. CONTROL EQUIPMENT MUST NOT USE OR GENERATE MORE THAN 250 V, WITH RESPECT TO EARTH.
NOTES ON BARRIERS:
1. SELECTED BARRIERS MUST BE CERTIFIED AS INTRINSICALLY SAFE AND MUST HAVE Voc NOT EXCEEDING Vmax AND Isc NOT EXCEEDING Imax CAPACITANCE VALUE SHALL BE AS SHOWN IN TABLE 1.
2. THE INTERCONNECTING CABLE CAPACITANCE AND INDUCTANCE, PLUS THE CAPACITANCE AND INDUCTANCE OF THE INTRINSICALLY SAFE EQUIPMENT, MUST BE LESS THAN OR EQUAL TO THE CAPACITANCE
3. MAY BE IN DIVISION 2 LOCATION IF SO APPROVED BY THE LOCAL AUTHORITY HAVING JURISDICTION. BARRIER MANUFACTURER'S CONTROL DRAWING, CANADIAN ELECTRICAL CODE PART 1, SEC. 18 AND APENDIX F, ARTICLE 500 OF THE NEC, OR ANSI/ISA RP12.06.
5. WHEN SELECTING CABLE FOR CONNECTION TO TURBINE METER, USE CABLE WITH THE FOLLOWING PARAMETERS: Cd ≤ 0.5 μF/ft. AND 40 μF/ft.
Badger Meter
INSTALLATION DRAWING FOR B2900 MONITOR
NONE
BLANCETT
B300001
A
CONFIDENTIAL
UNLESS OTHERWISE SPECIFIED
VENDOR NOTE:
B2900001

MODBUS INTERFACE

Communications	Protocol	Modbus RTU
	Interface	RS485, 2-wire and ground
	Data transmission	Half-duplex
	Baud rates	9600 (default), 19200, 38400, 57600 and 115200
	Word length	8-bits
	Parity	None
	Stop bits	1
	Max. devices on network	127
	Address range	1…127
	Cable	Shielded twisted pair with ground wire minimum 24 awg
Battery Life	9600 Baud	Up to 6 years with Modbus enabled and no loop power
	All other Baud rates	Up to 1 year with Modbus enabled and no loop power

RS485 standards state that a daisy-chained topology is recommended with stubs being as short as possible (much shorter than the main bus length). Use a shielded twisted-pair cable no less than 24 awg for connecting devices on a RS485 network.

The B2900 monitor is rated as a 1/8 unit load device (input impedance equal to 96 kΩ). The RS485 specification states it is capable of supporting 32 standard unit loads (1 standard unit load equals 12 kΩ). In order to determine the maximum number of devices on a network, the user must identify the unit load rating of each device on the network.

The maximum common input voltage range of the B2900 monitor is –7…10V. This differs from the RS485 standard of –7…12V. To make sure this range is achieved, the RS485 ground connection must be tied together in a daisy-chained fashion. The shield of the cable used should be tied to chassis or earth ground on only one end of the network. See *Figure 20 on page 45* for an example configuration and description.

Use a termination resistor of 120 Ω at the end of the bus.

A subset of the standard Modbus commands is implemented to provide access into the data and status of the B2900 monitor. The Modbus commands and their limitations supported by the B2900 monitor can be found in *Table 3 on page 45*.

IMPORTANT

A Modbus ground wire must be connected between the master and all other devices for proper operation.

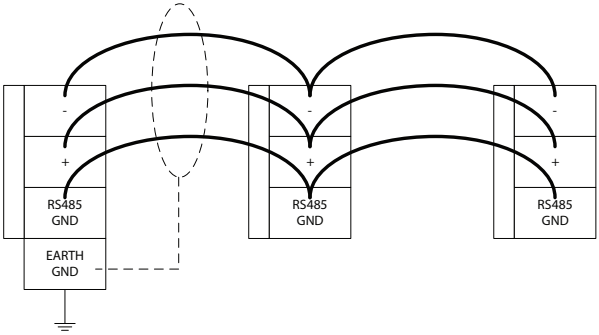

Label	Description
RS485 B(–)	Inverting data signal
RS485 A(+)	Non-inverting data signal
RS485 GND	Voltage reference for inverting and non-inverting signals
EARTH GND	Earth ground used for shield (only at one end of network)

Figure 20: Daisy-chain wiring configuration example

Command	Description
01	Read Coils
03 [1]	Read Holding Registers
05	Force Single Coil

Table 3: Modbus commands

Type	Bits	Bytes	Modbus Registers
Long Integer	32	4	2
Single Precision IEEE754	32	4	2

Table 4: Available data formats

Modbus Register / Word Ordering

The B2900 monitor sends each byte of a 16-bit register in big-endian format. For example, the hex value '1234' is sent as '12''34'. The B2900 monitor provides for big-endian and little-endian word ordering when a master requests data. To accomplish this, the B2900 monitor provides two register map spaces. See *Table 5 on page 46* and *Table 6 on page 46* for little-endian and big-endian register maps. Please note that both spaces provide the same data.

Register Mappings

Little-Endian			
Data Component Name	**Modbus Registers**		**Available Units**
	Long Integer Format	**Single Precision Floating Point Format**	
Spare	40100…40101	40200…40201	—
Flow Rate	40102…40103	40202…40203	Gallons, Liters, MGallons, Cubic Feet, Cubic Meters, Acre Feet, Oil Barrel, Liquid Barrel, Feet, Meters, Lb, Kg, BTU, MBTU, MMBTU, TON Per Second, Minute, Hour, Day
Spare	40104…40105	40204…40205	
Positive Totalizer	40106…40107	40206…40207	
Grand Total Totalizer	40108…40109	40208…40209	
Battery Voltage	40110…40111	40210…40211	x.xx
Spare	40112…40113	40212…40213	—

Table 5: Modbus register map for 'little-endian' word order master devices

For reference: If the B2900 Totalizer = 12345678 hex
Register 40106 would contain 5678 hex (Word Low)
Register 40107 would contain 1234 hex (Word High)

Big-Endian			
Data Component Name	**Modbus Registers**		**Available Units**
	Long Integer Format	**Single Precision Floating Point Format**	
Spare	40600…40601	40700…40701	—
Flow Rate	40602…40603	40702…40703	Gallons, Liters, MGallons, Cubic Feet, Cubic Meters, Acre Feet, Oil Barrel, Liquid Barrel, Feet, Meters, Lb, Kg, BTU, MBTU, MMBTU, TON Per Second, Minute, Hour, Day
Spare	40604…40605	40704…40705	
Positive Totalizer	40606…40607	40706…40707	
Grand Total Totalizer	40608…40609	40708…40709	
Battery Voltage	40610…40611	40710…40711	x.xx
Spare	40612…40613	40712…40713	–

Table 6: Modbus register map for 'big-endian' word order master devices

For reference: If the B2900 Totalizer = 12345678 hex
Register 40606 would contain 1234 hex (Word High)
Register 40607 would contain 5678 hex (Word Low)

Modbus Coil Description	Modbus Coil	Notes
Reset Running Totalizer	1	Forcing this coil ON will reset the running totalizer. After reset, the coil automatically returns to the OFF state.
Reset Grand Totalizer	2	Forcing this coil ON will reset both the running totalizer and the grand totalizer. After reset, the coil automatically returns to the OFF state.
—	3…8	Spares
Alarm Set point 1	9	0 = Set point OFF, 1 = Set point ON
Alarm Set point 2	10	0 = Set point OFF, 1 = Set point ON
—	11…16	Spares

Table 7: Modbus coil map

Opcode 01 – Read Coil Status

This opcode returns the state of the alarm coils. The following Coils are defined:

Coil #	Description
9	Alarm Set point 1
10	Alarm Set point 2
11 and up	Spare

Table 8: Read coil status

Command: <addr><01><00><08><00><02><crc-16>

Reply: <addr><01><01><0x><crc-16>

Opcode 03 – Read Holding Registers

This opcode returns the input holding registers, such as flow rate or totalizer.

NOTE: Each value must be requested individually. Return of a block of registers is not implemented at this time.

Example requesting flow rate in floating point format.

Command: <addr><03><00><C9><00><02><crc-16>

Reply: <addr><03><02><data><data><crc-16>

Opcode 05 – Force Single Coil

This opcode sets the state of a single coil (digital output). The following Coil Registers are defined:

Coil #	Description
1	Reset Totalizer
2	Grand Totals
3 and up	Spares

Table 9: Force single coil

The transition of coil from 0 to 1 will initiate function. This bit is auto reset to 0, so there is no need to set it to 0 after a totalizer reset command.

Command: <addr><05><00><00><FF><00><crc-16>

Reply: <addr><05><00><00><FF><00><crc-16>

SPECIFICATIONS

Display	Common	Simultaneously shows Rate and Total	
		5 x 7 Dot Matrix LCD, STN Fluid	
	6 Digit Rate, 0.5 inch (12.7 mm) numeric		
	7 Digit Total, 0.5 inch (12.7 mm) numeric		
	Engineering Unit Labels 0.34 in. (8.6 mm)		
	Annunciators	Alarm 1(🔔), Alarm 2 (🔔), Battery Level (▮▮▮▮▮), RS485 Communications (COM)	
Power	Auto switching between internal battery and external loop power; includes isolation between loop power and other I/O		
	Battery	3.6V DC lithium D Cell gives up to 6 years of service life Note: Modbus enabled at baud rate of 19,200 or higher without loop power reduces battery life to 1 year	
	Loop	4…20 mA, two wire, 25 mA limit, reverse polarity protected, 7V DC loop loss	
Inputs	Magnetic Pickup	Frequency Range	1…3500 Hz
		Frequency Measurement Accuracy	±0.1%
		Over Voltage Protection	28V DC
		Trigger Sensitivity	30 mVp-p (High) or 60 mVp-p (Low) - (selected by circuit board jumper)
	Amplified Pulse	Direct connection to amplified signal (pre-amp output from sensor)	
Outputs	Analog 4…20 mA	4…20 mA, two-wire current loop	
		25 mA current limit	
	Totalizing Pulse	One pulse for each Least Significant Digit (LSD) increment of the totalizer	
		Pulse Type (selected by circuit board jumper)	Opto-isolated (Iso) open collector transistor
			Non-isolated open drain FET
		Maximum Voltage	28V DC
		Maximum Current Capacity	100 mA
		Maximum Output Frequency	16 Hz
		Pulse Width	30 mSec fixed
	Status Alarms	Type	Open collector transistor
			Adjustable flow rate with programmable dead band and phase.
		Maximum Voltage	28V DC
		Maximum Current	100 mA
		Pullup Resistor	External required: 2.2k ohm minimum, 10k ohm maximum
Modbus Digital Communications	Modbus RTU over RS485, 127 addressable units / 2-wire plus ground network, selectable baud rate: 9600, 19200, 38400, 57600 or 115200, long integer and single precision IEEE754 formats; retrieve: flow rate, job totalizer, grand totalizer, alarm status and battery level; write: reset job totalizer, reset grand totalizer		
Data Configuration and Protection	Two four-digit user selectable passwords; level one password enables job total reset only, level two password enables all configuration and totalizer reset functions		

Certifications	Safety	Intrinsically Safe Class I Division 1, Groups C, D; Class II, Division 1 Groups E, F, G			
	Entity Parameters	4…20 mA Loop: Vmax = 28V DC	Imax = 26 mA	Ci = 0.5 µF	Li = 0 mH
		Pulse Output: Vmax = 28V DC	Imax = 100 mA	Ci = 0 µF	Li = 0 mH
		Reset Input: Vmax = 5V DC	Imax = 5 mA	Ci = 0 µF	Li = 0 mH
		RS485: Vmax = 10V DC	Imax = 60 mA	Ci = 0 µF	Li = 0 mH
		Turbine Input: Voc = 2.5V	Isc = 1.8 mA	Ca = 1.5 µF	La = 1.65 H
	EMC	IEC61326-1; 2004/108/EC			
Measurement Accuracy	0.05%				
Response Time (Damping)	1…100 seconds response to a step change input, user adjustable				
Environmental Limits	–22…158° F (–30…70° C); 0…90% humidity, non-condensing;				
Materials and Enclosure Ratings	Polycarbonate, stainless steel, polyurethane, thermoplastic elastomer, acrylic; NEMA 4X/IP 66 meter, remote and swivel mount; NEMA/UL/CSA Type 4X (IP-66)				
Engineering Units	Liquid	US Gallons, Liters, Oil Barrels (42 gallon), Liquid Barrels (31.5 gallon), Cubic Meters, Million Gallons, Cubic Feet, Million Liters, Acre Feet			
	Gas	Cubic Feet, Thousand Cubic Feet, Million Cubic Feet, Standard Cubic Feet, Actual Cubic Feet, Normal Cubic Meters, Actual Cubic Meters, Liters			
	Rate Time	Seconds, minutes, hours, days			
	Totalizer Exponents	0.00, 0.0, X1, x10, x100, x1000			
	K-factor Units	Pulses/US Gallon, Pulse/cubic meter, pulses/liter, pulses/cubic foot			

PART NUMBER CONSTRUCTION

				-		-
Model						
Blancett B2900 Display	**B29**					
Model						
Advanced		**A**				
Mounting						
Meter			**M**			
Remote			**R**			
Swivel			**S**			
Handheld			**H**			
Units of Measure						
Customer Selectable					**CS**	

MOUNTING OPTIONS AND DIMENSIONS

Meter Mount

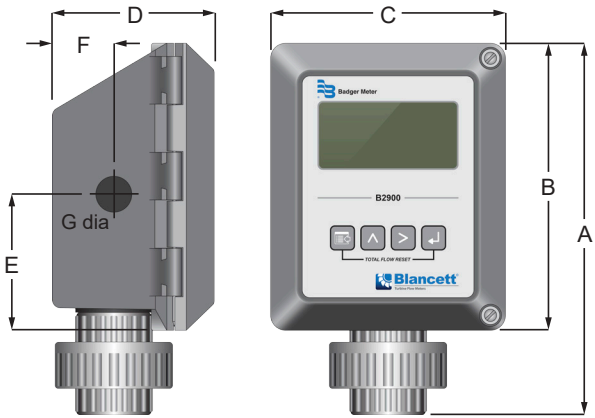

A	B	C	D	E	F	G dia
9.25 in. (235.0 mm)	7.00 in. (177.8 mm)	5.75 in. (146.0 mm)	4.00 in. (101.6 mm)	3.45 in. (87.6 mm)	1.50 in. (38.1 mm)	0.875 in. (22.2 mm)

Remote Mount

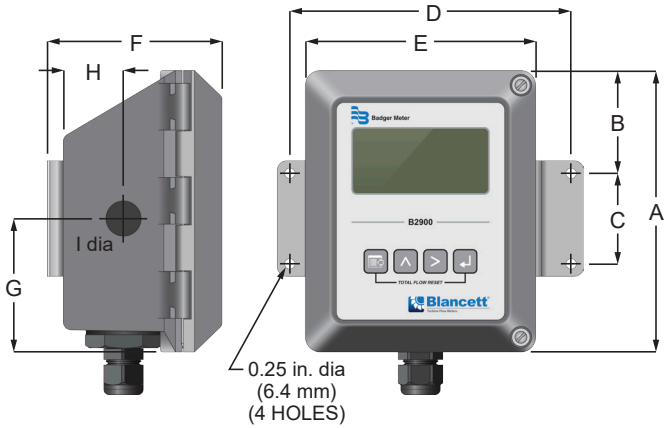

A	B	C	D	E	F	G	H	I dia
7.00 in. (177.8 mm)	2.40 in. (61.0 mm)	2.25 in. (57.2 mm)	7.00 in. (177.8 mm)	5.75 in. (146.0 mm)	4.38 in. (111.2 mm)	3.45 in. (87.6 mm)	1.50 in. (38.1 mm)	0.875 in. (22.2 mm)

Handheld

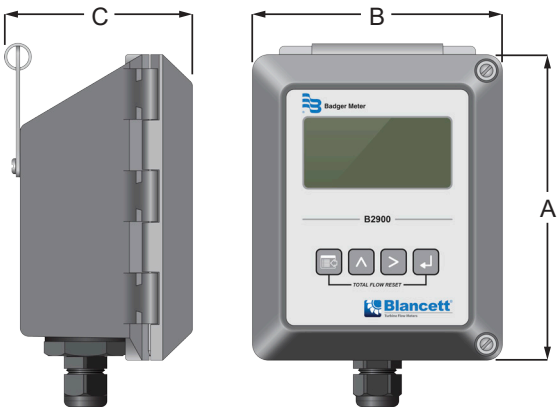

A in. (mm)	B in. (mm)	C in. (mm)
7.00 (177.8)	5.75 (146.0)	4.38 (111.2)

Swivel Mount

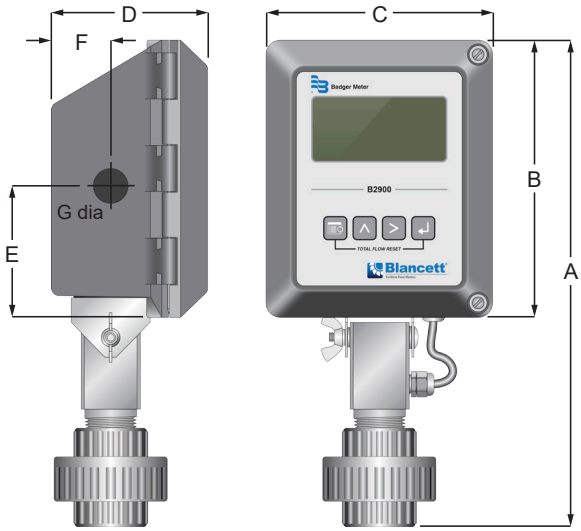

A	B	C	D	E	F	G dia
12.25 in. (311.2 mm)	7.00 in. (177.8 mm)	5.75 in. (146.0 mm)	4.00 in. (101.6 mm)	3.45 in. (87.6 mm)	1.50 in. (38.1 mm)	0.875 in. (22.2 mm)

Control. Manage. Optimize.

Blancett is a registered trademark of Badger Meter, In. Other trademarks appearing in this document are the property of their respective entities. Due to continuous research, product improvements and enhancements, Badger Meter reserves the right to change product or system specifications without notice, except to the extent an outstanding contractual obligation exists. © 2024 Badger Meter, Inc. All rights reserved.

www.badgermeter.com