Preso®
Differential Pressure Flow Meters

Ellipse® Pitot Tube Meter

AHR Annular Low Pressure Wet Tap Meter

Badger Meter

PTT-UM-00375-EN-04 (August 2021)

User Manual

CONTENTS

Introduction. 3

Specifications 3

Pipe Orientation and Sensor Mounting 4

Installation Instructions, Single Support 4

Installation Instructions, Double Support 5

Location Instructions 6

Flow Curve 7

INTRODUCTION

The Preso patented elliptical design outperforms and provides greater accuracy than traditional differential pressure flow measurement devices. This differential pressure flow meter is designed with a series of ports facing the upstream velocity pressures, as well as flow sensing ports strategically located ahead of the trailing edge flow separation.

The multi-ported, self-averaging flow element consists of an elliptical shape with two independent flow sensing chambers. The impact velocity sensing holes (high pressure) are located along the leading edge and the true static sensing holes (low pressure) are on the exterior probe side. Model AHR comes with instrument shutoff valves with provisions to accept a transmitter or direct indicating meter.

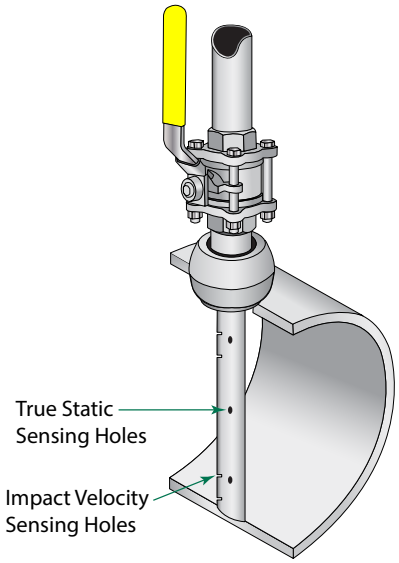

Figure 1: AHR pressure sensing holes

SPECIFICATIONS

Applications	Liquid (without system shutdown), air, gas
Pipe Sizes	2…48 inches (50…1220 mm)
Pressure	150 psi (1034 kPa) maximum
Temperature	150° F (66° C) maximum
Accuracy	±0.75% of reading
Turndown Ratio	17:1 with no vacuum effect
Standard Components	T-type head, 316 SS 1/4 in. or 1/2 in. FNPT connection CS compression fitting with SS ferrule 316 SS isolation ball valve, NPT CD reducer coupling CS 3000 lb weld fitting, ASTM A105 CS nipples, schedule 40 316 SS Ellipse sensor 316 SS ID tag with wire Instrument valves (2 per sensor) 1/4 in. or 1/2 in., CS
Reynolds Number	Greater than 75,000 maintains most accurate flow measurements Less than 75,000 consult factory for estimated results
Resonance	If greater than 0.8, use double support.

Table 1: Specifications

PIPE ORIENTATION AND SENSOR MOUNTING

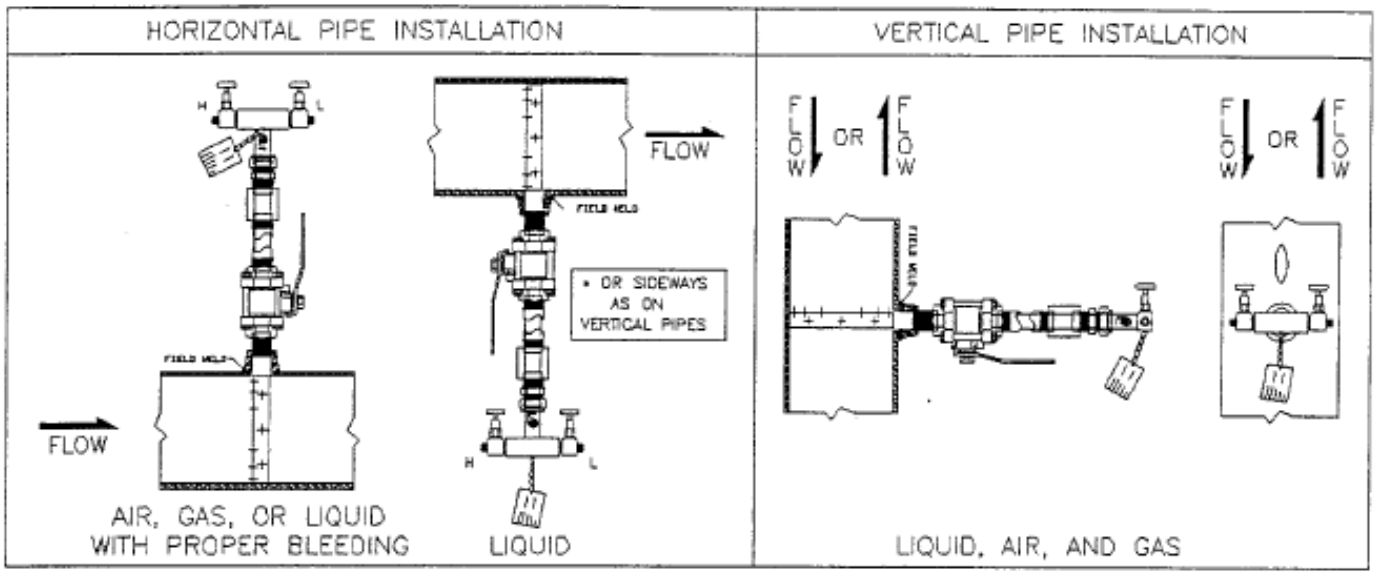

Figure 2: Orientation and mounting

INSTALLATION INSTRUCTIONS, SINGLE SUPPORT

1. Choose the proper location to install the AHR Ellipse using AGA/ASME standards (or equivalent). See *"Location Instructions" on page 6*.
2. Grind the surface of the pipe where the AHR Ellipse is to be inserted to provide a clean area for welding.
3. Weld the supplied weld-o-let to the pipe using standard codes for your application. Protect the threads during the welding process.
4. Thread the close (short) nipple into the weld connector. Install the supplied 3-piece isolating ball valve.
5. Open the isolating ball valve. Mount the high-pressure drilling machine onto the ball valve. Drill a hole through the pipe wall according to the following table.

Model / Sensor	Weld Connector	Drill Bit
AHR (7/8 in.)	1-1/4 in.	1-1/8 in.
AHR1 (1-1/4 in.)	1-1/2 in.	1-3/8 in.

NOTE: There is no need for a drilling machine if it is not a hot tap installation or if the system is not pressurized.

6. Withdraw the drill bit through the isolating ball valve. CLOSE the ball valve and dismantle the drilling machine. Make sure there is no leakage at the valve and close nipple connections. The ball valve is to remain completely closed until step 10.
7. Thread the supplied cage (long) nipple into the isolating ball valve. Install the supplied reducer (1-1/4 in. x 1 in. coupling) on the cage nipple.
8. Thread the supplied packing gland onto the reducer.
9. Install the instrument valves (optional) at the pressure connections on the AHR head. Make sure the valves are FULLY CLOSED before proceeding.
10. Insert the Ellipse AHR through the packing gland and cage nipple until it reaches the isolating ball valve. Slightly tighten the compression nut of the packing gland and attach the safety chain to the AHR. Open the isolating ball valve and push the sensor down by hand until it reaches the opposite side of the pipe.

⚠CAUTION

THE ELLIPSE AHR MUST BE MANUALLY HELD IN ITS FULLY INSERTED POSITION UNTIL THE COMPRESSION NUT HAS BEEN COMPLETELY TIGHTENED IN STEP 11 AND THE SAFETY CHAIN HAS BEEN PROPERLY ATTACHED.

11. While holding the Ellipse AHR in its fully inserted position, align the arrow on the sensor head with the flow direction.

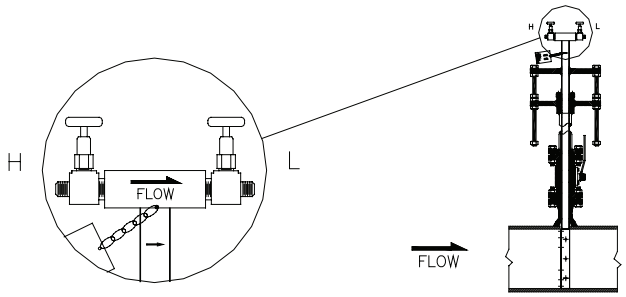

Figure 3: Sensor alignment

12. Completely tighten the packing gland to prevent leakage.
13. Connect the instrument lines to the sensor head valves, then connect the lines to a gage or transmitter.

INSTALLATION INSTRUCTIONS, DOUBLE SUPPORT

NOTE: For non-hot tap installations only.

1. Follow steps 1 through 10 under *"Installation Instructions, Single Support" on page 4*. Size the hole used for the double support according to the following table.

Model / Sensor	Weld Connector	Drill Bit
AHR (7/8 in.)	1/2 in.	1/2 in.
AHR1 (1-1/4 in.)	1 in.	7/8 in.

2. Weld the double support weld-o-let making sure that it is centered with the drilled hole.
3. Install the Ellipse AHR sensor through the two holes. Make sure that the double support pin passes through the guide ring. See *Figure 4*.

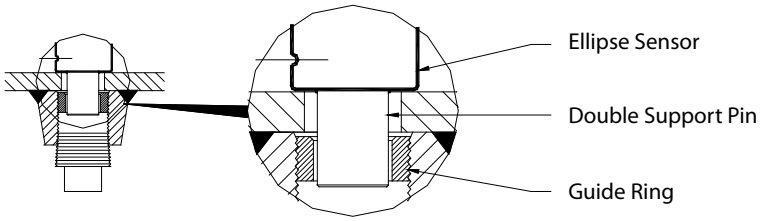

Figure 4: Double support pin

4. Align the arrow on the sensor head with the direction of flow as in step 11, *"Installation Instructions, Single Support" on page 4*.
5. Check that the AHR Ellipse is in the correct orientation and spans the inside of the pipe. Tighten the compression nut manually. Using a wrench, tighten the compression nut an additional 1-1/4 turns.
6. Install the plug into the end of the double support weld-o-let. Tighten the plug to prevent leakage.

LOCATION INSTRUCTIONS

Straight pipe requirements: Accuracy is affected by the piping configurations due to the disturbances of the flow profile. A fully developed symmetrical flow profile is achieved with the minimum upstream and downstream recommended lengths.

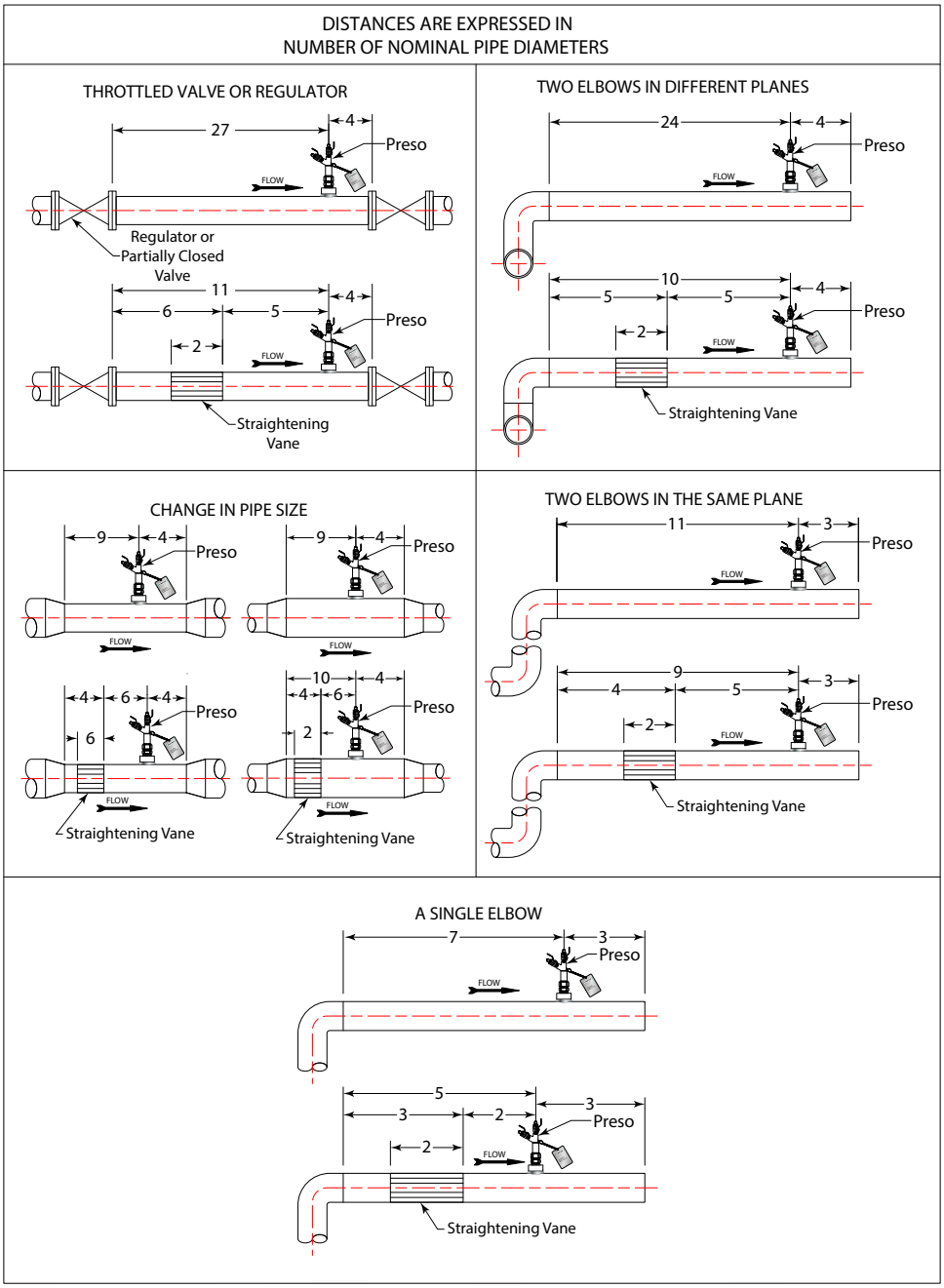

Figure 5: Location instructions

FLOW CURVE

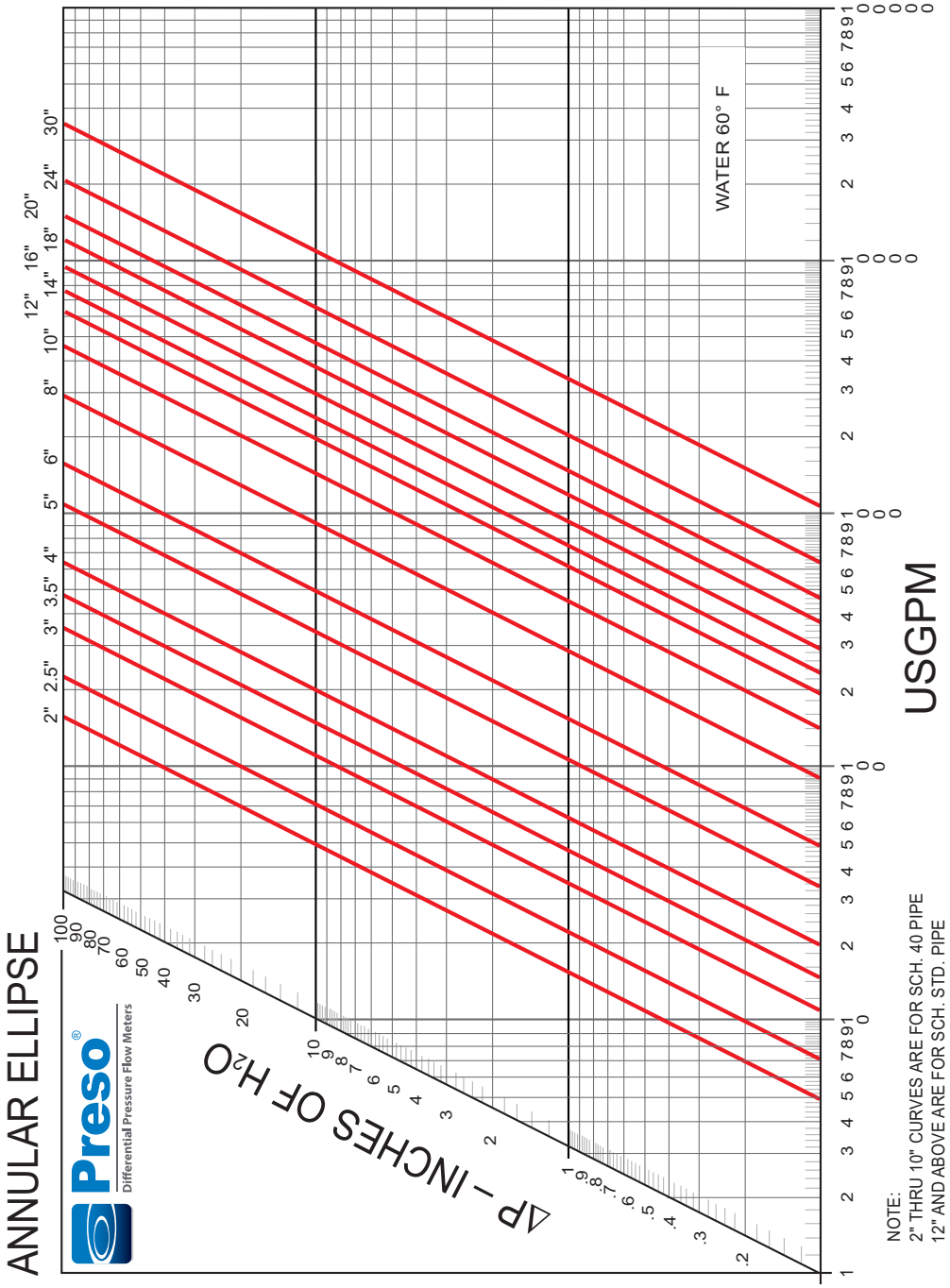

Figure 6: Flow curve

Control. Manage. Optimize.

Preso and Ellipse are registered trademarks of Badger Meter, Inc. Other trademarks appearing in this document are the property of their respective entities. Due to continuous research, product improvements and enhancements, Badger Meter reserves the right to change product or system specifications without notice, except to the extent an outstanding contractual obligation exists. © 2021 Badger Meter, Inc. All rights reserved.

www.badgermeter.com