Dynasonics® Ultrasonic Flow Meters

Transducers

DT94 Doppler

INTRODUCTION

This document explains how to install doppler transducers on the outside of a closed pipe. The transducers can be installed on vertical or horizontal pipes.

Doppler flow meters transmit ultrasound through the pipe wall into the flowing liquid. The ultrasound reflects off particles or gas bubbles suspended in the liquid. The frequency shift of the reflected ultrasound is directly related to the speed of the moving particles or bubbles. Particles should be larger than 35 micron.

⚠ WARNING

EQUIPMENT SHALL BE PROTECTED FROM UV LIGHT.

⚠ WARNING

EQUIPMENT TO BE PROTECTED FROM IMPACT.

PRE-INSTALLATION REQUIREMENTS

NOTE: Protect all parts until installation is complete.

Select a Transducer Location

Select a location for the transducers on a section of pipe that has at least 10 pipe diameters upstream of the transducers and 5 pipe diameters downstream. See *"Figure 2: Piping configuration and transducer positioning" on page 2*.

For example, if a 2 in. pipe is being measured, the minimum upstream pipe in front of the transducer should be 20 in. and the minimum downstream pipe behind the transducer should be at least 10 in.

Pipe runs shorter than the minimums may sometimes be used, but with reduced accuracy. There is no way to determine how much accuracy is sacrificed without doing in-field testing.

For installations where the 10/5 pipe diameters rule cannot be followed, divide the total length of available straight pipe into thirds and mount the rail with 2/3 of the pipe upstream and 1/3 of the pipe downstream.

Standard Temperature
Standard Pipe System (DT94)

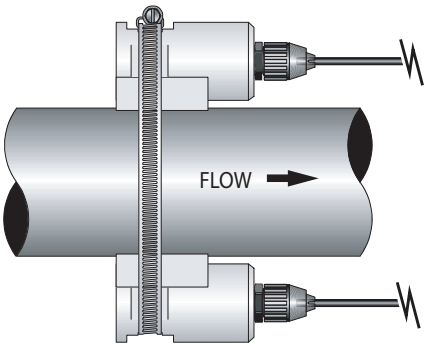

Top View of Pipe

A full pipe is absolutely essential for making accurate flow measurements. The flow meter cannot determine if the pipe is full or not. If the pipe is partially full, the meter will over-report the amount of flow by the percentage of the pipe that is not filled with liquid or may not detect any flow.

Install the mounting system in an area where the transducers will not be inadvertently bumped or disturbed.

Avoid installations on downward flowing pipes unless adequate downstream head pressure is present to overcome partial filling of—or cavitation in—the pipe.

For the best accuracy, mount the Doppler transducer 180 degrees apart and facing one another. If there are high amount of particles that block the ultrasound from passing through the pipe, mount the transducers side by side.

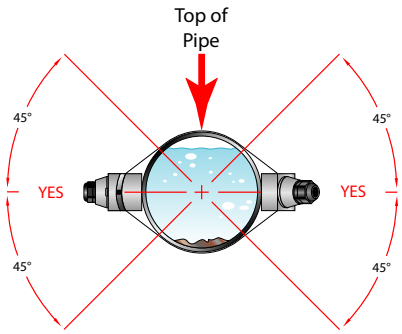

Figure 1: Transducer positioning for horizontal pipes

Badger Meter

HYB-UM-04746-EN-01 (April 2025)

Installation Guide

Piping Configurations and Transducer Positioning

Figure 2 shows the number of pipe diameters required downstream and upstream of the transducers for various piping configurations.

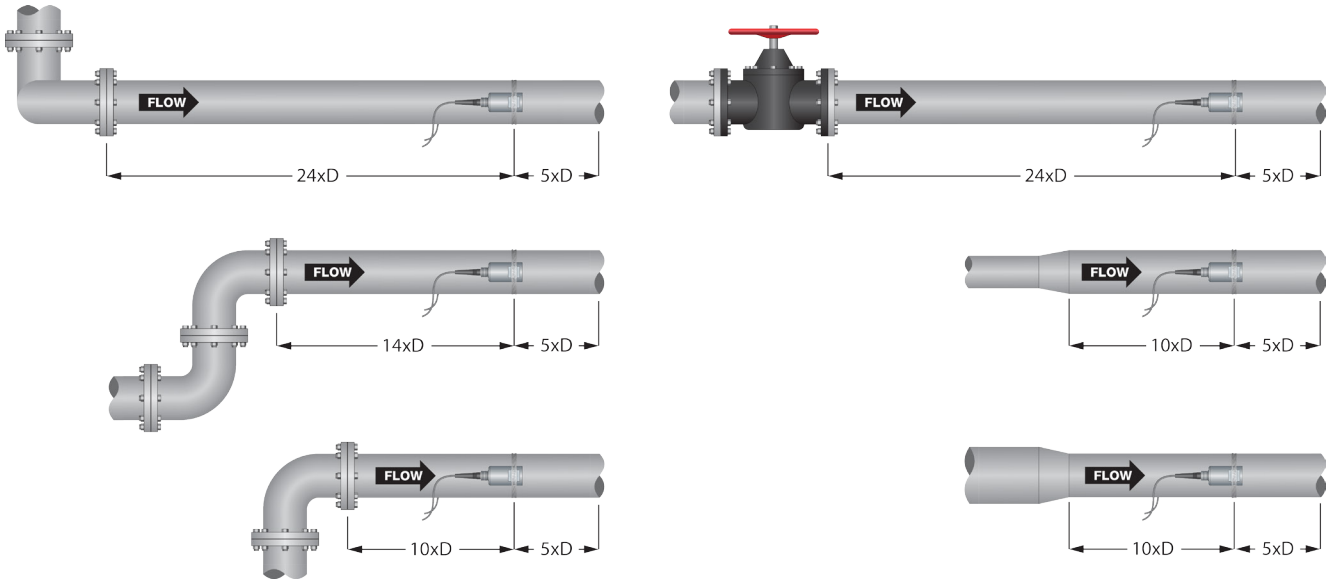

Figure 2: Piping configuration and transducer positioning

The system will provide repeatable measurements on piping systems that do *not* meet these pipe diameter requirements, but the accuracy of the readings may be influenced.

Partially-Filled Pipe Situations

In some locations, the process pipe may be momentarily only partially filled. Examples include: lack of back pressure, insufficient line pressure and gravity flow applications.

To eliminate these situations:

- Do not install the transducers at the highest point of the pipeline.
- Do not install the transducers in a vertical, downward flow section of pipe.

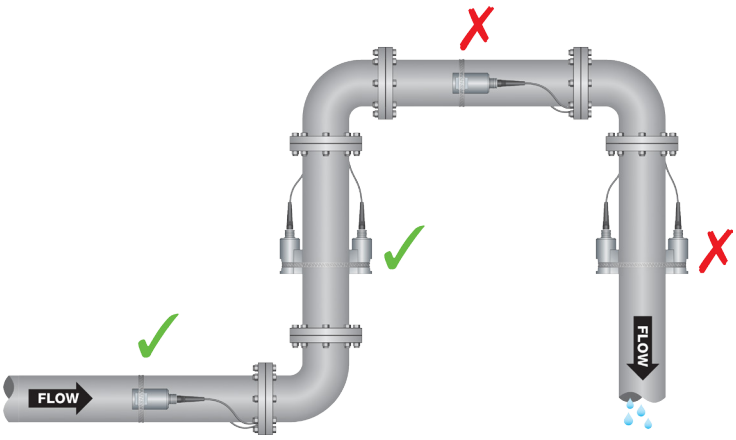

Figure 3: Transducer orientation

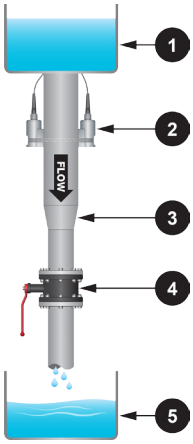

1	Supply Tank
2	Transducers
3	Pipe Restriction
4	Valve
5	Batching Tank

Figure 4: Transducer vertical mount, flow down

Pipe Material

Pipes must be good conductors of ultrasound and not block or scatter the signal. Most pipe materials will allow the signal to pass through. They include: stainless steel, PVC, CPVC, ABS, polypropylene, PVDF, copper, copper nickel, ductile iron and aluminum.

Wound fiberglass and concrete pipes typically trap air and are not suitable for these transducers. Some galvanized pipes may scatter the ultrasonic signal.

Any liners in the pipe need to adhere to the pipe walls. Total wall thickness and liner should not exceed 10 in. (254 mm). New mortar-lined ductile iron pipes may have air trapped in the lining initially. Letting the pipe soak will allow water to displace the air and allow the signal to pass through.

Paint with good adhesion to the pipe typically allows the ultrasonic signal to pass through. If there is blistering or peeling paint, sand the paint off before installing the transducers.

Test the signal strength before permanently installing the transducers.

INSTALLATION

Mount the Transducers onto the Pipe

After selecting a mounting location and determining the proper transducer spacing, mount the transducers onto the pipe:

1. Clean the surface of the pipe. If the pipe has external corrosion or dirt, wire brush, sand or grind the mounting location until it is smooth and clean. Paint and other coatings, if not flaked or bubbled, do not need to be removed. Plastic pipes typically do not require surface preparation other than soap and water cleaning.
2. Wrap the strap around the pipe in the area where the transducers are to be mounted. Leave the strap loose enough to allow the transducers to be placed underneath. If multiple straps are being used, it can be beneficial to wrap electrical tape around all but one strap connection to secure the strap worm screws in place.
3. Place a single bead of couplant, approximately 1/8 inch (3 mm) thick by 1/2 inch (12 mm) wide, on the flat face of each transducer.
   See *Figure 5*. Couplant is provided with the transducers. Generally, a silicone-based grease is used as an acoustic couplant, but any good quality grease-like substance that is rated to not flow or shrink at the operating temperature of the pipe is typically acceptable.

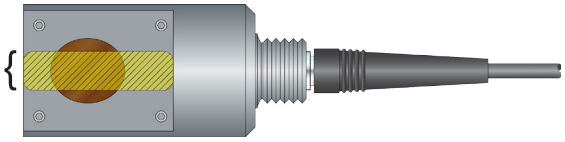

Figure 5: Application of couplant

Conditions	Couplant	Timeframe
Pipe surface temperature under 130° F (55° C), dry pipe	P.N. D002-2011-001 or D002-2011-008 Dow Corning 111 Grease	1 year
Pipe surface temperature under 350° F (177° C), dry or submerged, permanent mount	P.N. D002-2011-002 Dow Corning 732 multi-purpose sealant	Product life
Pipe surface temperature under 350° F (177° C), dry pipe	P.N. D002-2011-011 or D002-2011-012 Dow Corning 340 heat sink compound	Product life
Pipe surface temperature under 350° F (177° C), dry pipe, silicone not permitted	P.N. D002-2011-009 Molykote G-N; non-silicone	1 year
Pipe surface temperature under 120° F (49° C), dry pipe	P.N. D002-2011-014 Aquasonic 100 water soluble ultrasound transmission gel	Less than 4 hours

Timeframes are based on conditions where the transducers and couplant are not disturbed.

To check the condition of the couplant, monitor for any decreases in the signal strength and check for any physical changes to the couplant.

4. Place each transducer under the strap with the flat face—amber plastic window—positioned towards the pipe. The notch on the back of the transducer provides a mounting surface for the strap. The transducer cables must be facing in the same direction and in the downstream direction for proper operation. Pull the strap through until it loosely fits around the pipe. Rotate the screw so it is parallel to the strap and tighten the screw slightly to help hold the transducer onto the pipe. Verify that the transducer is true to the pipe and all air is expelled out of the gap between the transducer faces and the pipe as necessary. Tighten the strap screw to secure the transducers to the pipe.

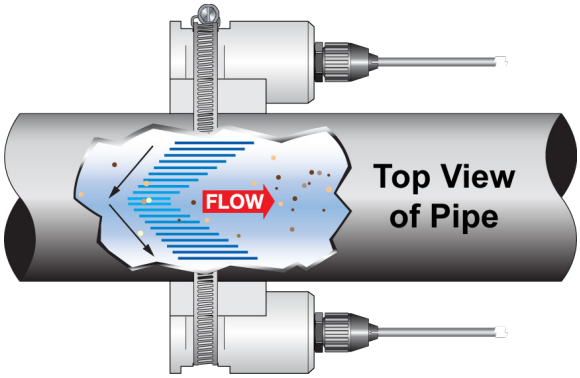

Figure 6: Transducer placement

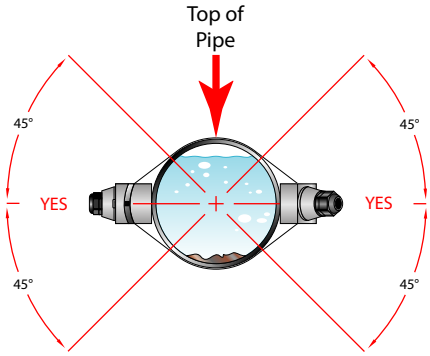

Figure 7: Transducer positioning

5. Avoid high voltage cable trays and conduits when routing the transducer cables to the transmitter or the handheld.
6. If the signal strength is too low, mount the transducers side by side.

NOTE: Doppler transducers may be mounted on the same pipe as transit time transducers without encountering acoustic crosstalk.

DT94 Doppler Transducer Dimensions

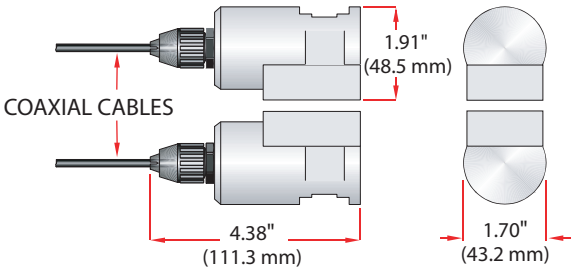

Figure 8: DT94 doppler transducer dimensions

Dynasonics is a registered trademark of Badger Meter, Inc. Other trademarks appearing in this document are the property of their respective entities. Due to continuous research, product improvements and enhancements, Badger Meter reserves the right to change product or system specifications without notice, except to the extent an outstanding contractual obligation exists. © 2025 Badger Meter, Inc. All rights reserved.