Flow Sensor Installation into Cast Iron Pipe

Models 225/226 Hot Tap Sensors

THE SYSTEM

Municipal water companies and other industries have used cast iron pipe for years. It has proven economical to use and exhibits some good qualities for this type service.

THE PROBLEM

Cast iron pipe does present some problems when installing service taps or instrumentation such as pressure sensors or flow probes. In larger pipe sizes service saddles become expensive and difficult to install. The use of a welded fitting would provide a simple solution if ductile steel pipe were being used, but cast iron does not weld easily and the welding operation can affect the pipe's structural integrity within the heat zone of the weld.

THE SOLUTION

For the above reasons, it has become common practice to drill a hole in the pipe wall and tap with a standard AWWA tapered thread. A corporation stop capable of accepting the instrument or other pipe fittings is then threaded directly into the pipe wall.

The attached drawing shows a method of installing the Badger Meter® Hot Tap Sensor, using a Ford Meter Box Co. 2 in. full port #FB1600 Ball Corp. This Ball Corp. has a 2 in. AWWA tapered (CC or CS) threaded inlet and 2 in. NPT outlet, allowing it to thread directly into the pipe wall, while accepting standard 2 in. NPT fittings.

Equipment Required:

1 Badger Meter PN#813145-1211 Model 225B Hot Tap Sensor w/o valve and nipple.

1 Badger Meter, Inc. Model HTT Hot Tap Installation Tool. (One tool can be used for installing or removing any number of sensors under pressure.)

1 Standard 2 in. NPT bronze coupling (2.2 in. face-to-face).

1 3 in. long schedule 80 red brass nipple.

1 Ford Meter Box Co. #FB1600-7 Ball Corp. valve.
Inlet 2 in. AWWA taper external thread.
Outlet 2 in. NPT internal thread.

Ford Meter Box Company
P.O. Box 443
Wabash, IN 46992-0443
www.fordmeterbox.com

NOTES

1. The assembled coupling, nipple, and valve must project from the inside pipe wall a minimum of 8-1/2 in. and a maximum of 11-1/2 in. to allow a correct sensor insertion depth of 1-1/2 in.
2. Badger Meter does not warrant piping, fittings, and valves not purchased from Badger Meter, Inc.
3. The users and installers of this assembly are entirely responsible for the correct drilling, tapping, assembly and protection of those components. We recommend review of AWWA standards C600 for valve and fitting installation, C800 for threading details, and C151 for pipe wall thickness.

   As required by these standards the assembly should be protected by enclosing in a valve box or otherwise restrained to prevent stress on all parts of the assembly, especially on the threads tapped in the cast iron pipe. Care must be taken in tapping depth so that full thread engagement results without excessive stress on the threads. Pipe wall thickness should be chosen to provide effective thread engagement of 4 threads if possible and 3 threads as a minimum. (See AWWA C151, table A.2.)
4. A total of 50 in. from the outside of the pipe should be provided as clearance for use of the hot tap installation tool if the pipe is to remain pressurized during installation or removal.

Advantages

1. Simple installation procedure.
2. Universal components allow a minimum inventory to handle all pipe size requirements.
3. Economically priced.
4. Sensor can be installed and removed without system interruption.

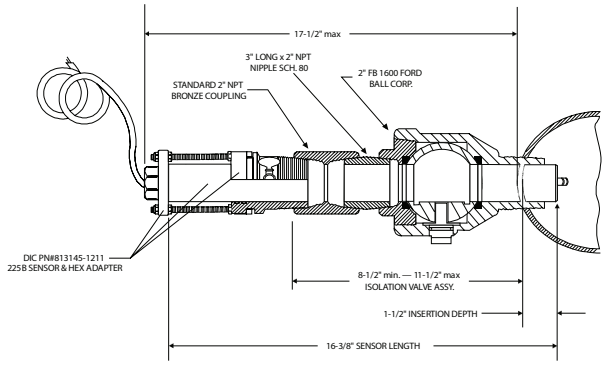

NOTE: ALL DIMENSIONS ARE FOR REFERENCE ONLY.
CUTTING TOOL MAY BE REQUIRED FOR ADDITIONAL CLEARANCE

Badger Meter

IND-AS-01223-EN-03 (October 2021)

Application Data Sheet

Control. Manage. Optimize.

Data Industrial is a registered trademark of Badger Meter, Inc. Other trademarks appearing in this document are the property of their respective entities. Due to continuous research, product improvements and enhancements, Badger Meter reserves the right to change product or system specifications without notice, except to the extent an outstanding contractual obligation exists. © 2021 Badger Meter, Inc. All rights reserved.

www.badgermeter.com