Hot Tap Tool

Model HTT for Hot Tap 225B, 226B and 226SS

DESCRIPTION

The Model HTT is a tool used with the Hot Tap Versions of the 200 Series flow sensors to safely install or remove those sensors from a pressurized pipe system. It is designed to work only with Model 225B, 226B or 226SS flow sensors.

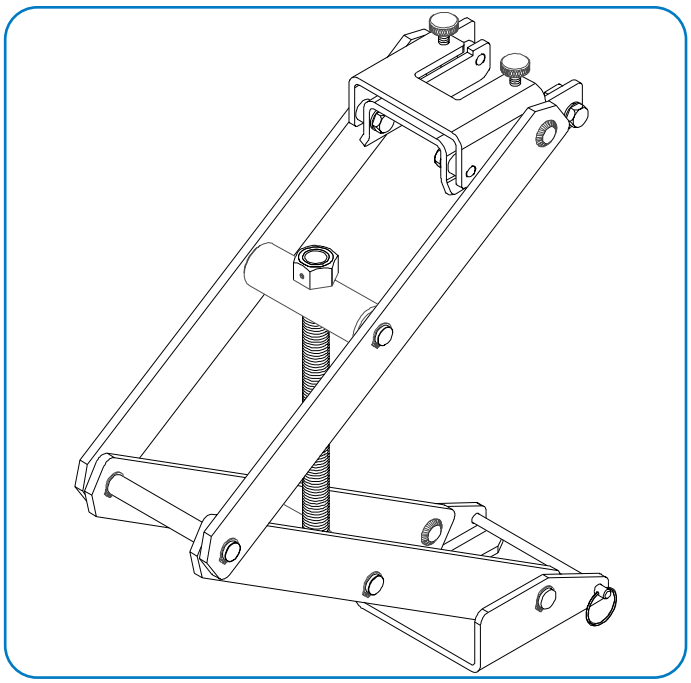

INSTALLING INTO A PRESSURIZED SYSTEM

Pre-Installation Considerations

When choosing where to install the sensor make sure that there is clearance around and above the pipe as well as easy access so you can use the Model HTT. Make sure that the pipe meets the straight pipe and orientation requirements of the flow sensor itself.

Before you start, calculate the distance (D) between the top of the sensor hex mounting adapter and the bottom of the positioning collar (the top of the hex nut). To do so, **ADD** the H dimension, pipe wall thickness, and insertion depth, and **SUBTRACT** the total from the overall sensor length. See the example and formula below, and refer to *Figure 1*.

Example: The sensor is installed in an 8 in. schedule 80 pipe, with a pipe wall thickness of 1/2 in. If the overall sensor length is 16-3/8 in. and the H dimension is 10 in., the D value is calculated as follows:

D = Overall length – (H + pipe wall thickness + Insertion Depth)

D = 16-3/8 in. – (10 in. + 1/2 in. + 1-1/2 in.)

D = 16-3/8 in. – 12 in.

D = 4-3/8 in.

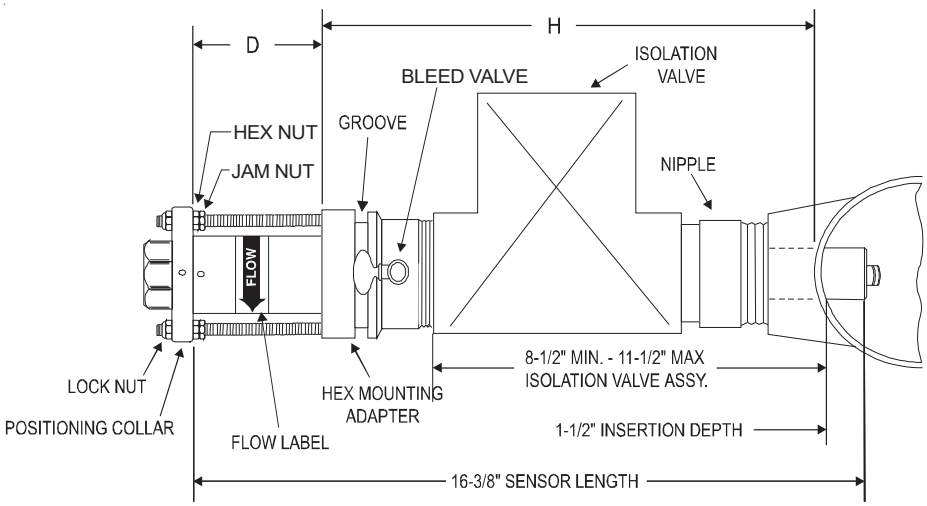

Figure 1: Hot tap flow sensor drawing

Badger Meter

SEN-QS-01699-EN-02 (November 2021)

Quick Start Manual

Installation

To install the hot tap flow sensor into a pressurized pipeline, follow these steps. Use *Figure 1 on page 1* and *Figure 2* for reference.

1. Set one set of hex/jam nuts so that the distance between the top surface of the hex nut and the top surface of the hex mounting adapter is equal to the D dimension calculated in the pre-installation considerations.
2. Adjust the other two sets of hex/jam nuts 1-1/2 in. (38.10 mm) below the first jam nut, to allow clearance for the HTT top yoke.
3. Fully extend the HTT by turning the drive nut counterclockwise with a 15/16 in. socket or box wrench (customer supplied) until the drive nut contacts the tool. Slide the positioning collar into the tool top yoke.
4. Remove the split ring and clevis pin from the HTT and slide the tool bottom yoke into the groove on the sensor hex mounting adapter. Secure by replacing the clevis pin and split ring.
5. Mark the sleeve 2-3/4 in. (69.85 mm) from the impeller end of the metal sleeve. This mark is a stopping point to make sure the impeller/bearing is not damaged.
6. Open the bleed petcock valve on the hex mounting adapter to relieve the pressure resulting from the sensor sleeve insertion.
7. Carefully hand insert the flow sensor sleeve assembly into the hex mounting adapter until the mark lines up with the top of the hex mounting adapter. At this point the sleeve will have been inserted past the top two O-rings in the adapter, approximately 1…1-1/4 in. (25.40…31.75 mm). Take care not to push the sensor past the mark on the sleeve as the impeller could be damaged if it strikes the closed valve.
8. Rotate the HTT so that the threaded rod with the adjusted hex/jam nuts is centered in the top yoke of the tool.
9. Rotate the flow sensor sleeve so that the positioning collar holes align with the threaded rods. Make sure that the flow direction label is in the general direction and that the positioning collar is located in the recessed area of the top yoke.
10. Slide the top yoke of the HTT over the positioning collar and secure it by tightening the two thumbscrews on the top of the yoke.
11. Close the bleed petcock valve and slowly open the isolation valve.
12. Slowly turn the 15/16 in. drive nut clockwise to insert the flow sensor sleeve assembly through the valve and into the pipeline.
13. Carefully guide the three threaded studs of the hex mounting adapter through the holes of the flow sensor positioning collar.
14. Carefully lower the flow sensor until the positioning collar contacts the hex nut preset for the correct depth adjustment.
15. Install the three lock nuts onto the threaded rods, tightening only the lock nut on the threaded rod with the preset hex/jam nut.
16. Bring the two remaining lock nuts down until they just contact the positioning collar. Do not tighten yet.
17. Remove the HTT by loosening the two thumbscrews, removing the clevis pin and then sliding the insertion tool off the sensor.
18. Bring the two remaining sets of hex/jam nuts up to the underside of the positioning collar and tighten.
19. Align the flow sensor by first loosening the two set screws in the side of the positioning collar with a 3/32 in. Allen wrench.
20. Align the flow sensor sight holes along the pipe axis using the alignment rod (supplied in the installation kit). Verify that the flow label arrow on the flow sensor matches the liquid flow direction inside the pipe.
21. Tighten the positioning collar set screws.

NOTE: As a backup for the flow label arrow, there is a small hole located beside the sight hole on the upstream side of the sensor.

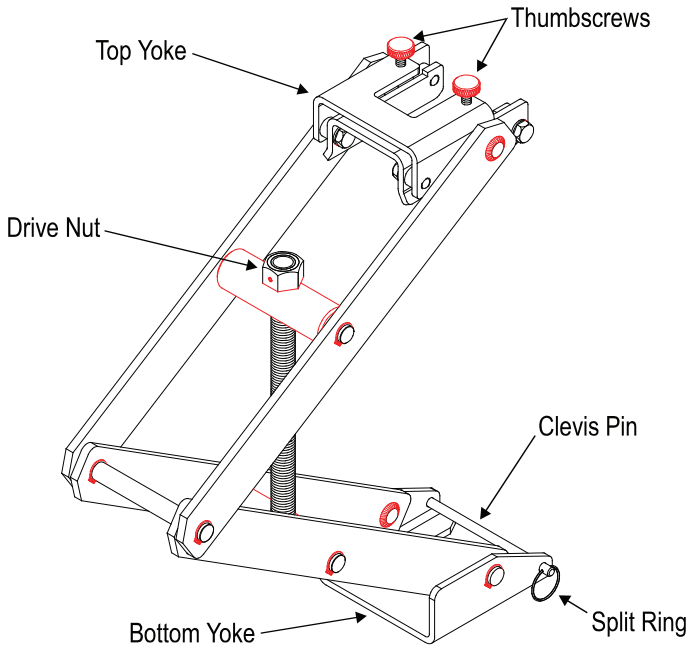

Figure 2: Model HTT Parts

REMOVAL FROM A PRESSURIZED PIPELINE

⚠WARNING

DO NOT REMOVE THE LOCK NUTS FROM THE THREADED RODS ABOVE THE POSITIONING COLLAR WITHOUT THE HOT TAP TOOL CONNECTED. SERIOUS INJURY COULD RESULT.

Use *Figure 1 on page 1* and *Figure 2 on page 2* for reference.

1. Adjust the HTT opening by rotating the drive nut with a 15/16 socket or box wrench (customer supplied) until the distance between the top and bottom yoke is approximately equal to the distance between the groove on the hex mounting adapter and the bottom surface of the flow sensor positioning collar.
2. Remove the split ring and clevis pin on the HTT.
3. Slide the HTT bottom yoke into the groove in the hex mounting adapter and secure by replacing the clevis pin and split ring.
4. To permit clearance for the top yoke, lower two of the three pairs of jam nuts under the sensor positioning collar to a minimum of 1-1/2 in. (38.10 mm) below the positioning collar. Then position the top yoke so the threaded rod with the remaining jam nuts are centered in the yoke.
5. Slide on the yoke, adjusting with drive nut as necessary.
6. Make sure the positioning collar is located in the recessed area of the yoke by adjusting the drive nut until the top yoke is snug against the bottom of the sensor positioning collar. Then tighten the thumb screws located on the top of the tool.
7. Remove the three lock nuts above the collar and slowly withdraw the flow sensor by rotating the drive nut of the HTT counterclockwise with a 15/16 socket or box wrench until drive nut bottoms out on the tool.
8. Close the gate or ball valve fully.
9. Open the flow sensor bleed valve located on the hex mounting adapter to relieve pressure between the valve and sensor.
10. Once all pressure is relieved, remove the HTT and remove the flow sensor from the hex mounting adapter.

Control. Manage. Optimize.

Data Industrial is a registered trademark of Badger Meter, Inc. Other trademarks appearing in this document are the property of their respective entities. Due to continuous research, product improvements and enhancements, Badger Meter reserves the right to change product or system specifications without notice, except to the extent an outstanding contractual obligation exists. © 2021 Badger Meter, Inc. All rights reserved.

www.badgermeter.com