Preso®
Differential Pressure Flow Meters

Ellipse® Pitot Tube Meter

AHF Annular Flanged Hot Tap Meter

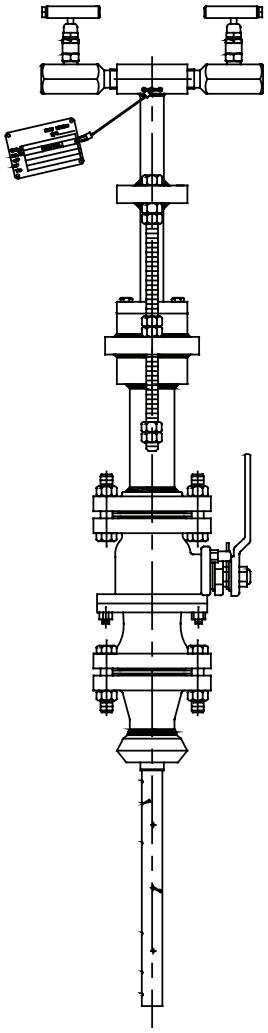

Badger Meter

PTT-UM-00512-EN-03 (August 2021)

User Manual

CONTENTS

Pipe Orientation and Sensor Mounting 3

Installation Instructions, Single Support 3

Installation Instructions, Double Support 5

Location Instructions 6

Flow Curve 7

PIPE ORIENTATION AND SENSOR MOUNTING

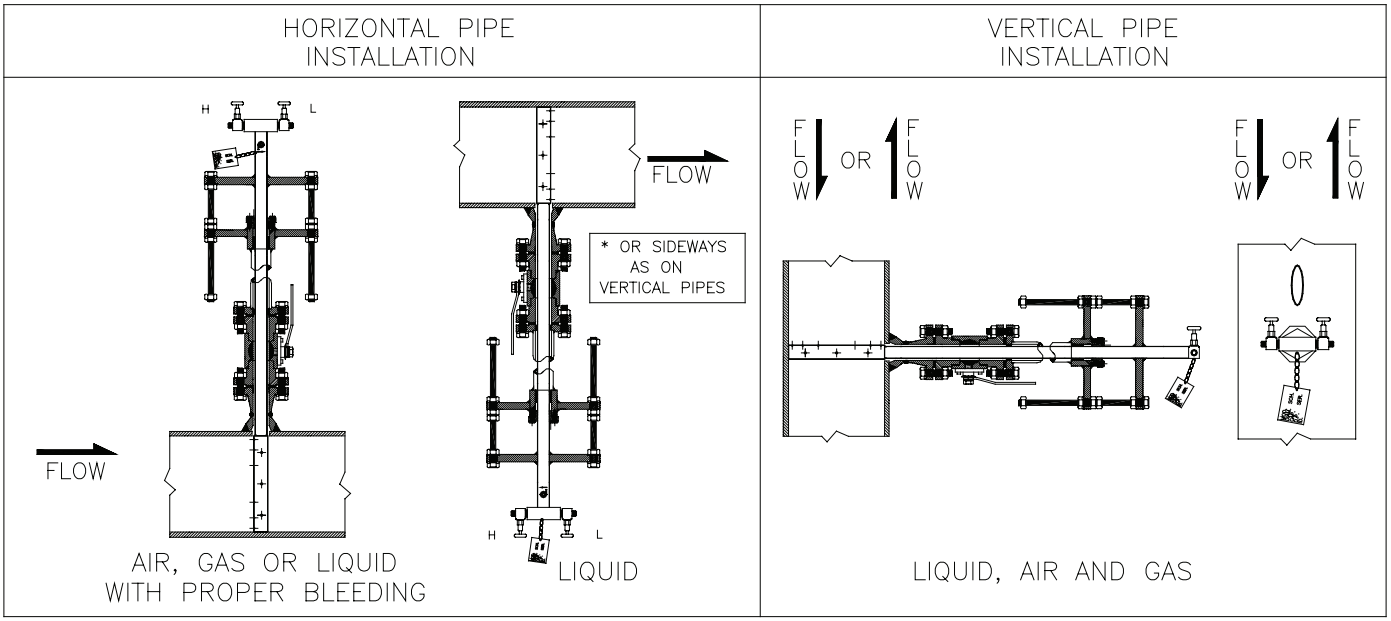

Figure 1: Orientation and mounting

INSTALLATION INSTRUCTIONS, SINGLE SUPPORT

1. Choose the proper location to install the AHF Ellipse using AGA/ASME standards (or equivalent). See *"Location Instructions" on page 6*.
2. Grind the surface of the pipe where the AHF Ellipse is to be inserted to provide a clean area for welding.
3. Weld the mating flange assembly to the pipe. Align the holes as shown below. Allow a 1/16 in. weld gap between the mounting flange and the pipe.

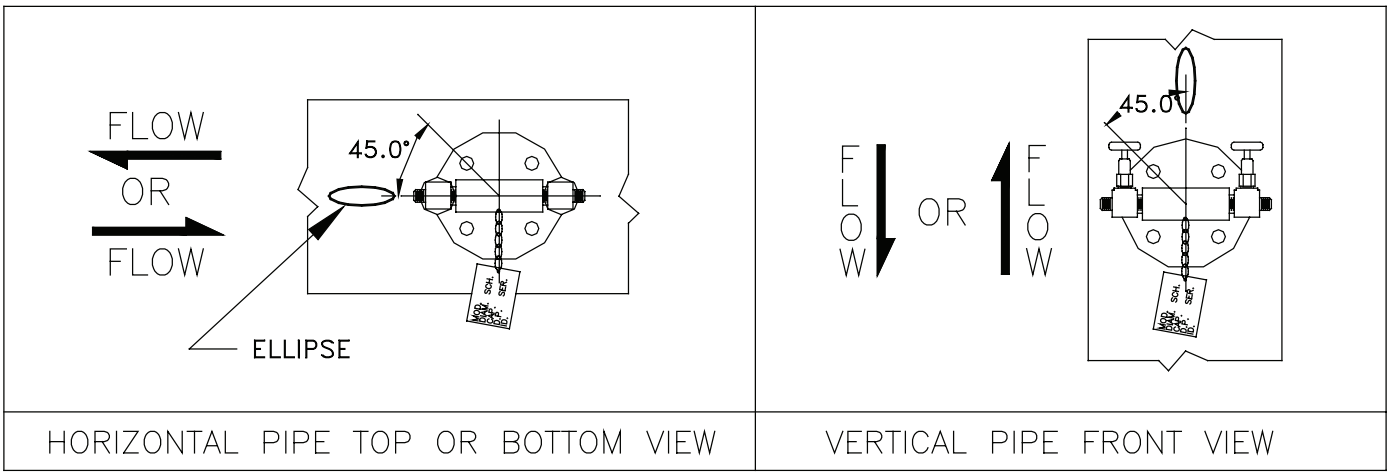

Figure 2: Horizontal and vertical pipe installations

4. Mount the flanged ball valve onto the mating flange assembly just welded in step 3.

5. Mount the high pressure drilling machine onto the ball valve. Open the ball valve. Drill a hole through the pipe wall according to the following table.

Model / Sensor	Weld Connector	Drill Bit
AHF (7/8 in.)	1-1/2 in.	1-1/8 in.
AHF1 (1-1/4 in.)	2 in.	1-3/8 in.
AHF2 (2-1/4 in.)	3 in.	2-1/2 in.

NOTE: There is no need for a drilling machine if it is not a hot tap installation or if the system is not pressurized.

6. Withdraw the drill bit through the isolating ball valve. CLOSE the ball valve and dismantle the drilling machine. Make sure there is no leakage at the valve and close nipple connections. The ball valve is to remain completely closed until step 9.
7. Mount the flanged cage nipple, weldneck flange and packing gland with threaded rods assembly by bolting it into the isolating flanged ball valve. Align the arrow on the sensor head with the direction of flow. See *Figure 3*.

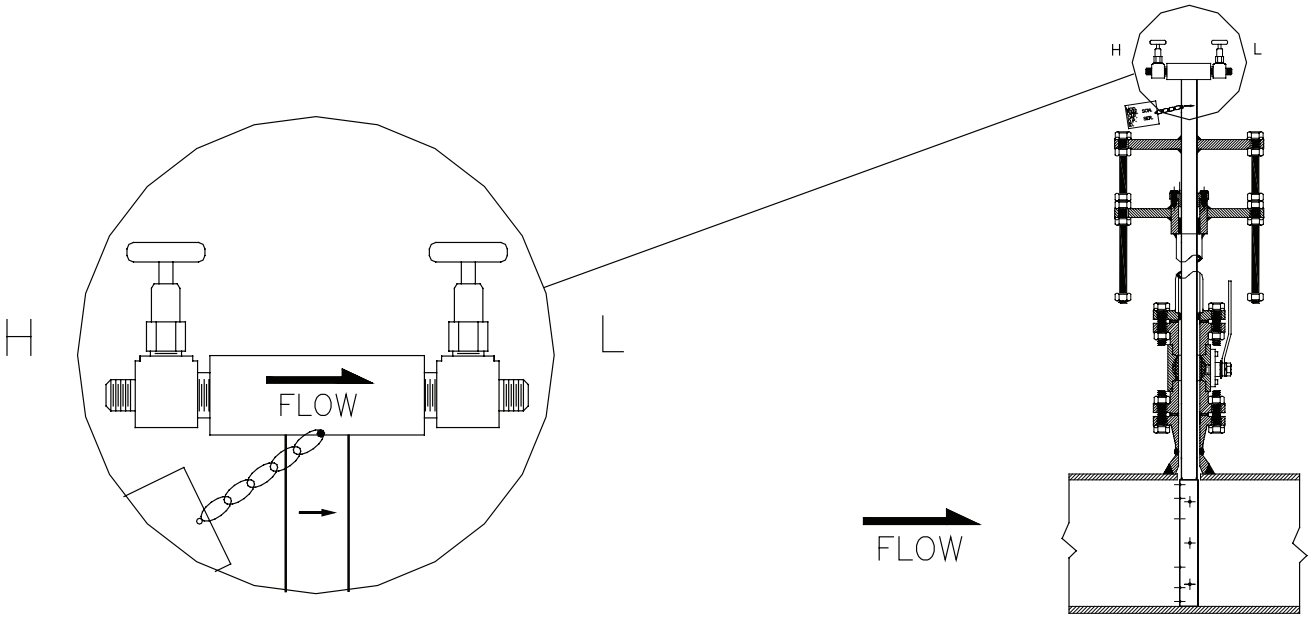

Figure 3: Sensor alignment

8. Install the instrument valves (optional) at the pressure connections located on the AHF Ellipse sensor head. Make sure the valves are FULLY CLOSED.
9. Open the isolating ball valve. Using a wrench, turn the threaded insertion rods clockwise into the pipe until the AHF Ellipse sensor reaches the opposite pipe wall.
10. Connect the instrument lines to the sensor head valves. Connect the lines to a gage or transmitter.

INSTALLATION INSTRUCTIONS, DOUBLE SUPPORT

NOTE: For non-hot tap installations only.

1. Follow steps 1 through 6 under *"Installation Instructions, Single Support" on page 3*. At 180° from—and on the same plane as—the previously drilled hole, grind the surface of the pipe to provide a clean area for welding. Drill a hole and deburr, especially on the inside of the pipe. Size the hole used for the double support according to the following table.

Model / Sensor	Weld Connector	Drill Bit
AHF (7/8 in.)	1/2 in.	1/2 in.
AHF1 (1-1/4 in.)	1 in.	7/8 in.
AHF2 (2-1/4 in.)	3 in.	2-3/4 in.

2. Weld the double support weld-o-let making sure that it is centered with the drilled hole (1/16 in. weld gap recommended).
3. Install the AHF Ellipse sensor through the two holes. Make sure that the double support pin passes through the guide ring. See *Figure 4*.

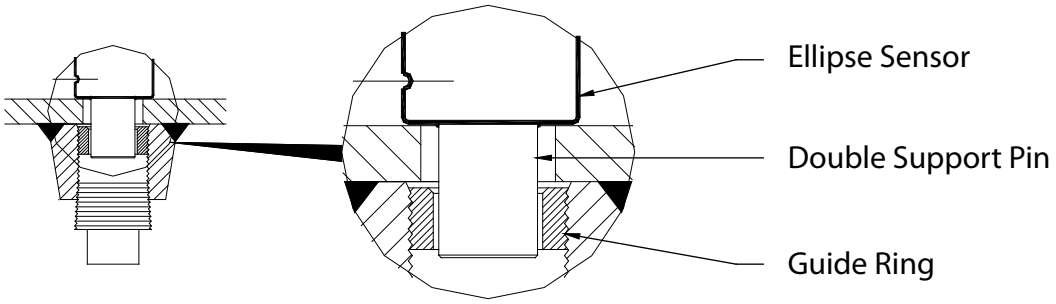

Figure 4: Double support pin

4. Align the arrow on the sensor head with the direction of flow as in step 7, *"Installation Instructions, Single Support" on page 3*.
5. Check that the AHF Ellipse is in the correct orientation and spans the inside of the pipe. Tighten the threaded insertion rods until the sensor reaches the other end of the pipe.
6. Install the plug into the end of the double support weld-o-let. Tighten the plug to prevent leakage.

LOCATION INSTRUCTIONS

Straight pipe requirements: Accuracy is affected by the piping configurations due to the disturbances of the flow profile. A fully developed symmetrical flow profile is achieved with the minimum upstream and downstream recommended lengths.

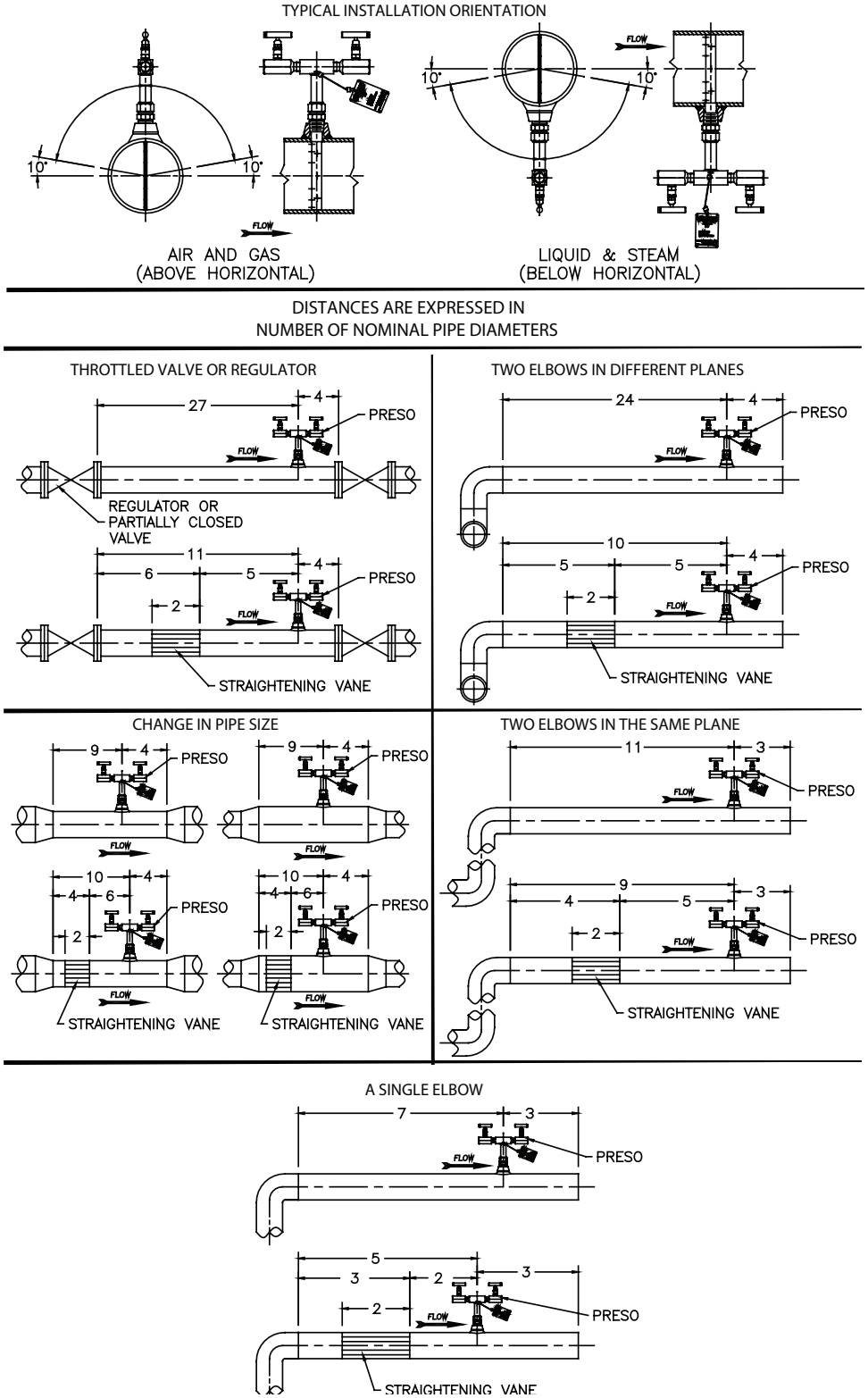

Figure 5: Location instructions

FLOW CURVE

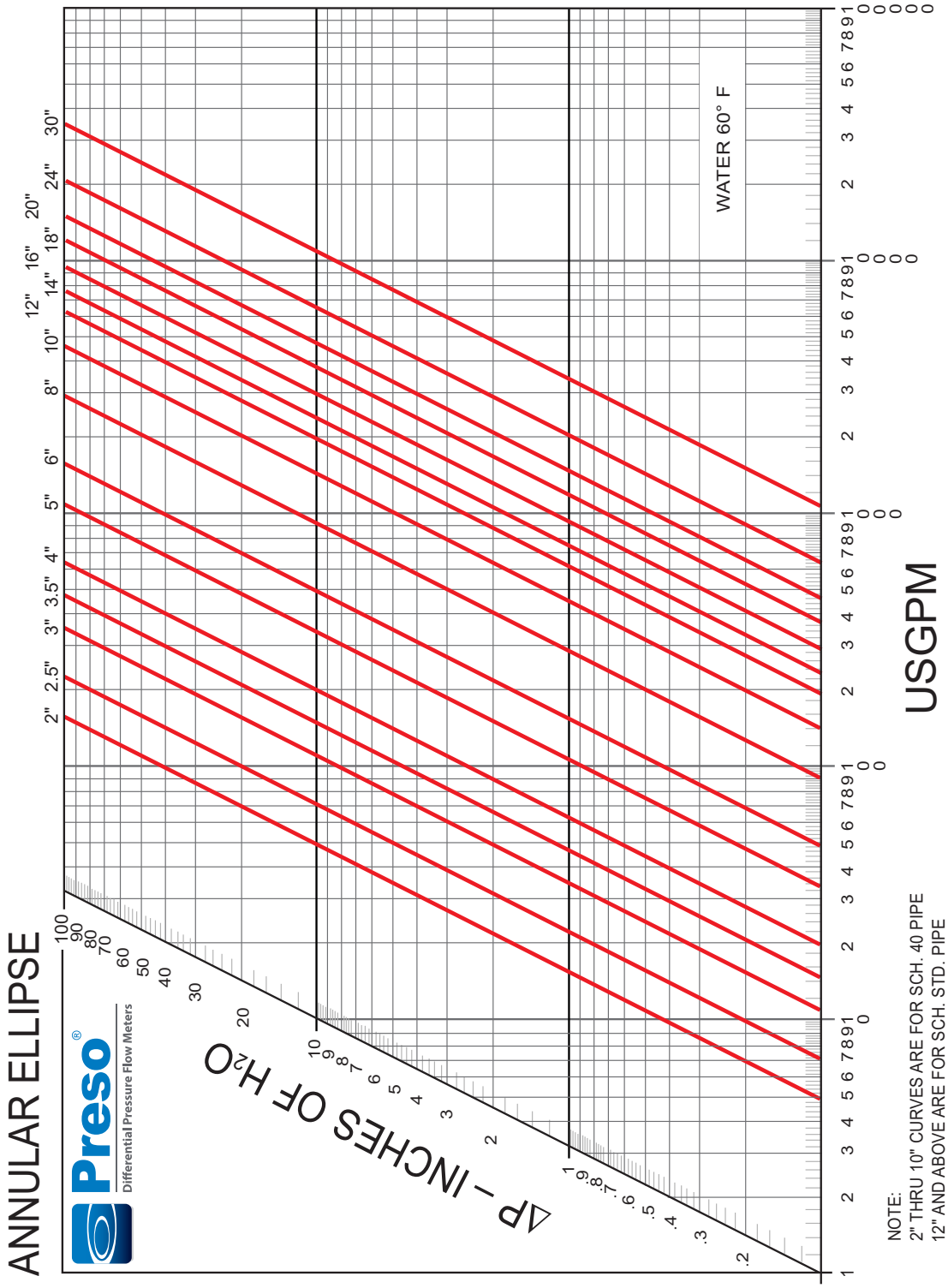

Figure 6: Flow curve

Control. Manage. Optimize.

Preso is a registered trademark of Badger Meter, Inc. Other trademarks appearing in this document are the property of their respective entities. Due to continuous research, product improvements and enhancements, Badger Meter reserves the right to change product or system specifications without notice, except to the extent an outstanding contractual obligation exists. © 2021 Badger Meter, Inc. All rights reserved.

www.badgermeter.com