Chlorine Measurement In Potable Water

Monitoring residual chlorine concentration in potable water systems is of increasing importance due to implementation of safe drinking water standards under the Clean Water Act. The surface water treatment rule requires that systems serving more than 3300 persons continuously monitor residual chlorine at the point where the water enters the distribution system. Residuals must be maintained above 0.2 PPM at all times, and a violation occurs if the residual falls below 0.2 for more than 4 hours.

The measurement required to monitor residual chlorine will depend on the type of chlorination being practiced in a given water system. Free chlorine monitoring is the most commonly used type of measurement due to the use of only chlorine in the disinfection of most water systems. However, some large water systems practice "chloramine treatment", where both chlorine and ammonia are added to the water to produce a "monochloramine" residual. For these systems, a total chlorine measurement is required in order to properly measure the monochloramine in the system.

Analytical Methods

There are two commonly used laboratory procedures for measuring residual chlorine, amperometric titration and DPD colorimetric. The amperometric titration is the standard against which all other methods are compared. The DPD colorimetric procedure is much simpler than amperometric titration and is more suitable for quick field tests. Amperometric measurements are generally used by larger water systems with more extensive laboratory facilities, while DPD tests are used by a much larger group of small and medium size water utilities.

Both laboratory procedures produce similar results in most measurement applications, with an accuracy of approximately ± 0.1 PPM. There is, however, one application in which the DPD procedure will often produce erroneous results. When a DPD free chlorine test is run on a sample containing a significant concentration of monochloramine, the measured free chlorine value will often be too high. This is due to an interference with the free measurement caused by monochloramine.

Chlorine Chemistry

The terminology used in the chlorination business is sometimes a bit confusing, with terms such as "residual chlorine", "free chlorine", "combined chlorine", and "total chlorine" often used incorrectly. These terms really describe the chlorine compound or compounds that exist in a given solution. The meaning of these terms is not difficult to understand, but requires an understanding of the basic chlorine solution chemistry.

When chlorine gas is added to water, it immediately reacts to form hypochlorous acid (HOCl) according to the following equation 1. If sodium hypochlorite is used, the reaction is simply the dilution of the hypochlorite ion according to equation 2. Note that gas chlorination tends to acidify the sample by adding hydrochloric acid, while hypochlorination increases the pH of the sample by the addition of sodium hydroxide. Regardless of the form of chlorine added, hypochlorous acid is the resulting chlorine form.

(1) $$Cl_2 + H_2O \Rightarrow HOCl + H^+ + Cl^-$$

(2) $$NaOCl + H_2O \Rightarrow HOCl + Na^+ + OH^-$$

The hypochlorous acid formed in the chlorination process undergoes a reversible equilibrium reaction which is pH dependent as shown in equation 3. HOCl, as previously mentioned, is called hypochlorous acid and OCl^- is called hypochlorite ion. Taken together, the total concentration of HOCl and OCl^- is called "Free Chlorine". HOCl will predominate at pH less than 7.5 while OCl^- is the dominate form above 7.5.

(3) $$HOCl \Leftrightarrow H^+ + OCl^-$$

Free chlorine is generally recognized as an excellent disinfectant, and is often the form of chlorine that exists as water enters the distribution system. However, free chlorine is quite reactive and will not carry throughout a some distribution systems without excessively high concentrations at the feed point. In addition, trace organics in the raw water can react with free chlorine to form halogenated organics (THM). In order to eliminate such problems, free chlorine is sometimes reacted with ammonia prior to the distribution system to produce a chlorine residual consisting of only monochloramine. This method of treatment is called "Chloramine Treatment". Free chlorine reacts rapidly and completely with ammonia according to equation 4 when the pH is above 7.

(4) $$HOCl + NH_4^+ + OH^- \Rightarrow NH_2Cl + 2H_2O$$

Monochloramine is also a disinfectant, though not as reactive as free chlorine. It is sufficiently stable to carry throughout a large water distribution system, providing protection at remote points, and is the reason that chloramine treatment is used in many large cities. Chloramine treatment is also frequently used to minimize THM formation when raw water contains larger amounts of organic material.

When only trace amounts of ammonia are present prior to chlorination, or when large dosages of chlorine are used, small amounts of dichloramine ($NHCl_2$) and trichloramine (NCl_3) can sometimes be formed. While these are generally not found in significant amounts in potable water systems, their formation is the result of the reactions in equations 5 and 6.

(5) $$HOCl + NH_2Cl \Rightarrow NHCl_2 + H_2O$$

(6) $$NHCl_2 + HOCl \Rightarrow NCl_3 + H_2O$$

The total concentration of monochloramine, dichloramine, and trichloramine in a water sample is referred to as "Combined Chlorine". In chloramine treated water, this value is normally 100% monochloramine, since the amount of ammonia added is sufficient to convert all free chlorine to NH_2Cl. The term "Total Chlorine" or "Total Residual Chlorine" refers to the total concentration of both free and combined chlorine in solution. The term "Residual Chlorine" is really a generic term that could refer to either free chlorine, combined chlorine, or total chlorine.

Continuous Chlorine Monitors

There are basically 4 types of on-line chlorine monitors used for continuous measurement of potable water, amperometric monitors, colorimetric monitors, selective ion electrode monitors, and polarographic membraned probes.

Amperometric Monitors

The most widely used monitoring systems employ the amperometric principle of measurement. These are adaptations of the amperometric titration, although not working in exactly the same way. In this type of monitor, sample flows into a chamber where chemicals are added to condition the sample for measurement. The measuring chamber contains a pair of noble metal electrodes across which a polarization voltage is applied. Chlorine in the conditioned sample (or iodine in systems where potassium iodide is added) generates a current between the two electrodes proportional to the amount of halogen in the sample. The resulting current is amplified and displayed on an associated electronic instrument that also provides outputs and alarm relays.

Amperometric type monitors generally require a continuous supply of electrolyte and often also contain some method for keeping the measuring electrodes clean (scouring plastic balls are often used). Chemical pumps, electrode cleaning, and sample filtration requirements often result in frequent maintenance. Operating chemicals can run upwards of $1000.00 per year.

Colorimetric Monitors

The second most common type of on-line monitor is the colorimetric type system. This type of analyzer is an automated DPD chemistry set. As with the amperometric monitor, this type of system requires that sample be pumped into a reaction chamber where modified DPD chemicals are added. The resulting color formed in the chamber is proportional to the amount of chlorine in the sample, and is measured with a colorimeter incorporated into the reaction chamber.

Colorimetric monitors require reagent replacement on a regular basis, usually every 1-2 weeks. The sample tubing used in these monitors is small diameter and subject to clogging unless samples are well filtered. In addition, sample turbidity and optical fouling can affect the results of the measurement. As with the amperometric monitor, regular maintenance is essential. Operating chemical costs run about $500.00 per year.

Selective Ion Electrode Monitors

This type of monitor is not widely used in potable water treatment because of its inability to measure free chlorine. However, it is sometimes used where total chlorine measurement is desired. The monitor is similar to an amperometric monitor where incoming sample is mixed with buffer and potassium iodide in a measuring chamber. The iodine released by the reaction of KI with chlorine in the sample is measured using a selective ion electrode in the reaction chamber.

As with the amperometric monitor, operating expenses are high, generally running $1500.00 per year or more. Frequent service is often required, but this type of monitor is capable of very high sensitivity.

Polarographic Membraned Probes

On-line monitors using direct sensing probes have gained increasing use in the market over the past 5 years. Analytical Technology's Series A15 monitors are based on this type of sensor, providing continuous measurement of either free or combined chlorine residuals without the use of chemical reagents.

Polarographic membraned probes can best be compared with Dissolved Oxygen sensors. The sensor consists of a pair of noble metal electrodes housed in a non-conductive shell and isolated from the sample by a chlorine permeable membrane. One significant advantage to this measurement system is that the measured sample never comes in contact with the measuring electrodes. This fact greatly reduces potential for electrode poisoning from other constituents in the sample, such as heavy metals. The membraned chlorine sensor is show schematically below:

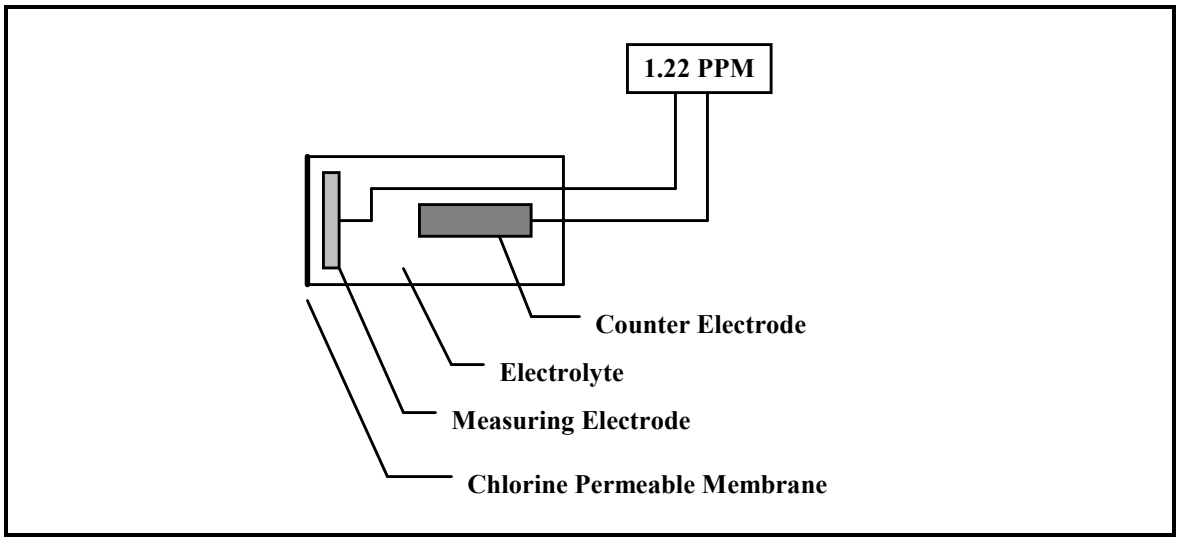

Chlorine Sensor Schematic

In operation, the membraned sensor functions as a chlorine driven battery. Chlorine in solution diffuses through the permeable membrane at the tip of the sensor. Once inside the sensor, the chlorine contacts a catalytic measuring electrode, where the chlorine is reduced to chloride. This reaction causes a current to flow between the counter electrode, which serves as an electron source, and the measuring electrode, with the current being directly proportional to chlorine concentration. The current is amplified and the resulting concentration displayed on a digital display. A separate temperature element (not shown) measures sample temperature to correct the sensor signal for the change in diffusion rate with temperature.

ATI has developed two types of chlorine sensors, one for monitoring free chlorine and a second for monitoring combined chlorine, often used for total chlorine measurement in chloramine treated water. For water plant use, these sensors are normally used with a constant head overflow assembly that automatically regulates the flow past the sensor, regardless inlet flow variations. The result is a system that will operate with very little maintenance, with only monthly or bimonthly sensor service required. Sensor service can be done quickly and easily when needed, and membranes and electrolyte expenses are generally less than $75.00 per year.

Sample Conditioning

Polarographic membraned sensors normally do not require sample conditioning of any kind. They tolerate suspended solids relatively well, but they are subject to membrane fouling due to oils or grease in the sample. This is normally not a problem in potable water systems or in wastewater plant effluents. However, certain industrial water streams can contain materials that can quickly foul chlorine membranes.

High pH can cause a loss of sensitivity in free chlorine monitors. Generally, free chlorine sensors will work well as long as the pH remains below 8.0. Should the pH of a sample stream run consistently higher than 8.0, a buffer system is needed to reduce the sample pH. The system shown below is available from ATI to handle applications with unusually high pH conditions. Chloramine monitors do not require pH control, even at high pH.

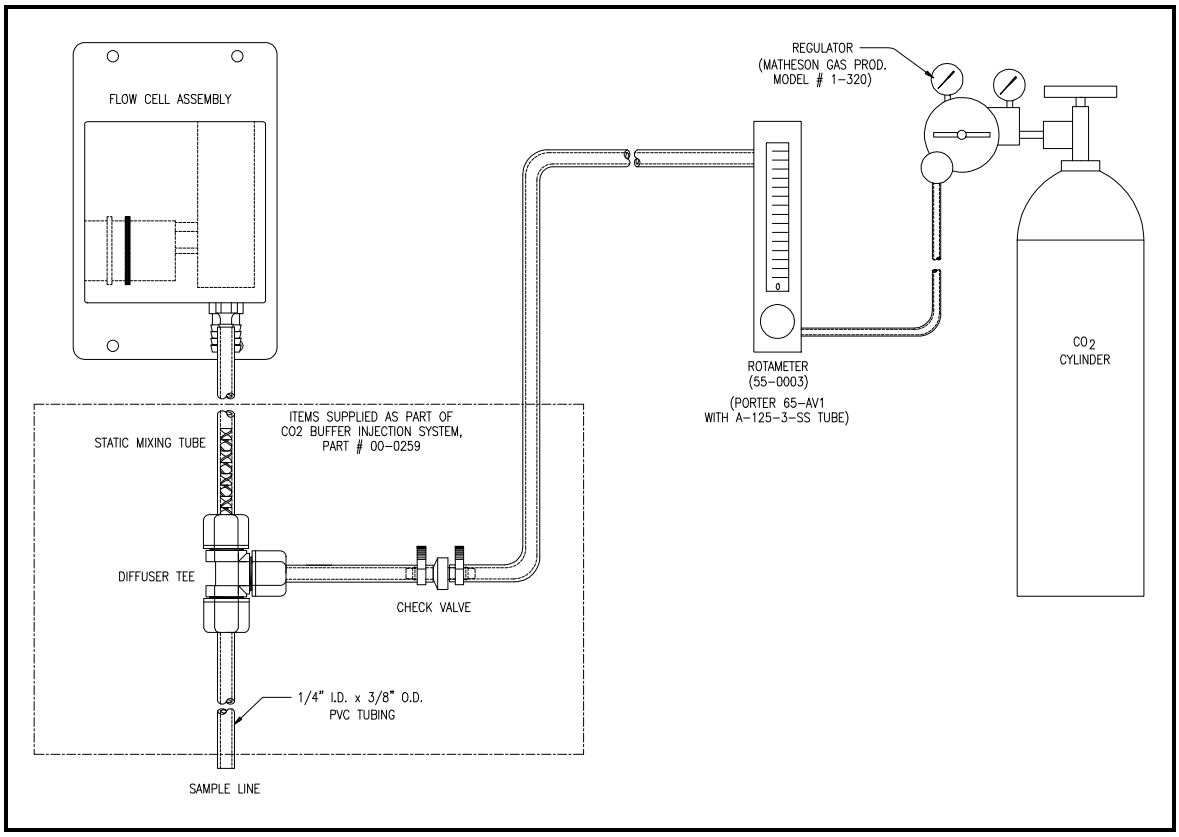

Typical CO_2 Buffer System

Installation of residual chlorine monitors in most water systems is relatively simple and can be done in a few hours. ATI can assist you with any questions you might have regarding the proper application, installation, and operation. For assistance, simply call the 800-959-0299 or fax our technical sales department at 610-917-0992.