Cox
Turbine Flow Meters

Flow Computer

Model 4050

Badger Meter

CXX-UM-01850-EN-02 (November 2021)

User Manual

CONTENTS

Scope of This Manual . . . 5
Typographic Conventions . . . 5
Safety Considerations. . . . 5
Terminology and Symbols . . . 5
Safety Rules and Precautionary Measures . . . 5
Description . . . 7
Optional Cards and Features . . . 7
Installation. . . . 8
Wiring. . . . 8
Manifold . . . 9
Operating the Flow Computer . . . 10
Front Panel Keypad . . . 10
Remote Control. . . . 11
Using the Remote Control or Front Panel Keypad . . . 14
Manifold System . . . 14
Menu Flowchart . . . 15
Navigating the Menus . . . 16
Primary Menu . . . 16
Secondary Menu . . . 16
Changing the Menu Option Names and Unit Labels . . . 18
Programming Mode. . . . 19
Enter Programming Mode . . . 19
Exit Programming Mode . . . 19
Programming Mode Options . . . 19
Setup Auto/Manifold Auto-ranging Trip Points . . . 20
Setup Comms . . . 20
Edit Curve . . . 21
Ch Setup . . . 21
Clear Totals. . . . 22
Sort Curve . . . 22
Analog Inputs . . . 22
Set Viscosity/Set SG . . . 22
Sort Vis/SG/Temp. . . . 23
Relays . . . 23

Cards Fitted . . . 23
RS232/RS485 . . . 24
Command Structure. . . . 24
General Address . . . 24
Computer Interface Information . . . 25
Pin Settings . . . 25
Code Example. . . . 25
Special Instructions . . . 27
Calibrating the PT100 . . . 27
Description of Unit Calculations . . . 27
K-Factor Calculation . . . 27
Hz/u – K-factor system . . . 29
Specifications . . . 30

SCOPE OF THIS MANUAL

This manual describes how to install and program the Model 4050 flow computer. The electronic version of this manual is available on our website at *www.badgermeter.com*.

IMPORTANT
Read this manual carefully before attempting any installation or operation.

Typographic Conventions

- Items in **bold** text and all capitals are items on the software screens that you need to select or choose by pressing a key, highlighting an option, checking a box or another similar way.
  Example: Press the **View Report** key.
- Items that are *italicized* are names of options, boxes, columns and fields. In most cases, first letters are capitalized.
  Example: The value displays in the *Status Information* field.
- Messages and special markings are shown in quotation marks.
  Example: "Service Stopped" displays in the title bar.

NOTE: Names, addresses and other customer-related information displayed in screen examples were created for demonstration purposes. No actual customer information is included.

Unpacking and Inspection

When you open the shipping container, visually inspect the product and applicable accessories for any physical damage such as scratches, loose or broken parts, or any other sign of damage that may have occurred during shipment.

NOTE: If you find damage, request an inspection by the carrier's agent within 48 hours of delivery and file a claim with the carrier. A claim for equipment damage in transit is the sole responsibility of the purchaser.

SAFETY CONSIDERATIONS

Terminology and Symbols

⚠ DANGER Indicates a hazardous situation, which, if not avoided, *will* cause death or serious personal injury.

⚠ WARNING Indicates a hazardous situation, which, if not avoided, *could* cause death or serious personal injury.

⚠ CAUTION Indicates a hazardous situation, which, if not avoided, *could* cause minor to moderate personal injury or damage to property.

SAFETY RULES AND PRECAUTIONARY MEASURES

The manufacturer accepts no responsibility whatsoever if the following safety rules and precaution instructions, and the procedures as described in this manual, are not followed.

- Modifications of the flow computer implemented without preceding written consent from the manufacturer will result in the immediate termination of product liability and warranty period.
- Installation, use, maintenance, and servicing of this equipment must be carried out by authorized technicians.
- Check the mains voltage and information on the manufacturer's nameplate before installing the flow computer.
- Check all connections, settings, and technical specifications of the various peripheral devices supplied with the flow computer.
- Never open the enclosure.
- Never touch the electronic components (ESD sensitivity).

- Never expose the system to heavier conditions than allowed according to the casing classification (see manufacturer's nameplate).
- If the operator detects errors or dangers, or disagrees with the safety precautions taken, inform the owner or the principal responsible party.
- Adhere to the local labor and safety laws and regulations.

DESCRIPTION

Designed to meet the ever-changing requirements of flow metering, the Model 4050 flow computer can be tailored to virtually any flow application. It can accept up to three meters, correct for temperature changes and produce a usable output in any flow unit. The Model 4050 flow computer can work with manifold systems and switch relays with adjustable trigger points. This output can be used to change valve states and select active flow meters.

Each Model 4050 flow computer is programmed to your individual requirements, and software is written for each unit when required. Each Model 4050 flow computer comes standard with a frequency input card, an analog input card, a relay card and a communication card. Other cards are optional as shown below. Please contact your distributor for additional options.

Optional Cards and Features

Frequency Input Card	3 frequency inputs	32-point linearization curve Programmable factor for unit conversion Programmable cutoff points down to 0.02 seconds
Analog Input Card	16-bit resolution	
	Six analog process inputs	Used for temperature, flow, density, viscosity, and pressure (absolute, barometric, gauge or differential) sensors 0…10V or 4…20 mA 5-point linearization curve Programmable mass factor for unit conversion
Analog Output Card	16-bit resolution	
	Three analog outputs	Used for connection to remote facilities such as alarms, indicators, chart recorders, Programmable Logic Controllers (PLCs) and more
		0…10V or 4…20 mA
		Configurable analog output reference parameter
Pulse Output Card	Three collector outputs	Transistor-transistor Logic (TTL) or Open
		Used for retransmission of rate or output of pulses per unit volume of total
		Can connect to remote indicators, totalizers or Programmable Logic Controllers(PLCs)
Relay Card	Three volt-free relays	Deployable for alarm purposes Can be used to control solenoid valves or pump starters with a batching unit or controller
Communication Card	RS232 and RS485 interfaces	Monitor parameters or program calibration data
	Serial or parallel port	Connection to panel or desk-mounted printers Option of time and date indication
Main Display	Alphanumeric with red dot matrix characters	
	Exceptionally wide viewing range	5.98 in. (152 mm) × 0.71 in. (18 mm)
	Three display fields	Left: five characters for parameter identity or designation Center: readout of quantity being measured Right: units of measurement
	Customization	Units Test Routines Buzzer
Data Entry	All calibration data is entered using the handheld infrared remote control after a successful passcode entry	
	To prevent incorrect data entry, when two Model 4050 flow computers are positioned in close proximity, the reception of the computer that is not being addressed can be inhibited by a sequence of keystrokes on the front panel of that computer (See *"Disabling and Enabling the Remote Control" on page 13* for more information)	

INSTALLATION

Wiring

The Wiring section describes how to wire the manifold and metering system to the flow computer terminals.

Diagram of the Flow Computer Back

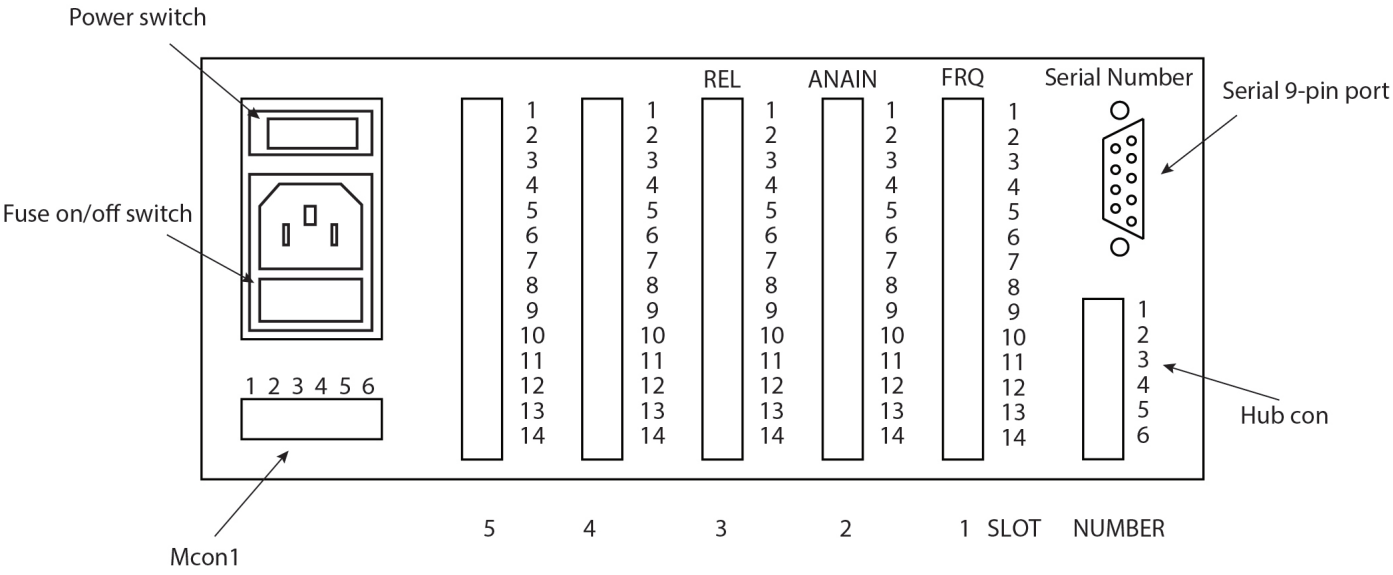

Figure 1: Chart of terminals

Terminals

Terminal Number	Terminal Name		
	RELAYS	**ANALOG IN**	**FREQUENCY**
	Slot 3	**Slot 2**	**Slot 1**
1	NO RELAY 1	+SIG 1V OR I	SPECIAL IP
2	C RELAY 1	0V	SPECIAL IP
3	NO RELAY 2	+SIG 2V OR I	EXITATION VOLTAGE
4	C RELAY 2	0V	+ SIGNAL 1
5	NO RELAY 3	+RTD PROBE	- SIGNAL 1 or 0V
6	C RELAY 3	0V	0V
7	—	+RTD PROBE	EXITATION VOLTAGE
8	—	0V	+ SIGNAL 2
9	—	-RTD	- SIGNAL 2 or 0V
10	—	0V	0V
11	—	-RTD	EXITATION VOLTAGE
12	—	0V	+ SIGNAL 3
13	—	+12V Output	- SIGNAL 3 or 0V
14	—	0V	0V

Mcon1 Inputs

Mcon1	Input
1	+24V DC input 100…200 mA (depends on cards fitted)
2	0V
3	0V
4	+24V DC output repeated from input 1 or when on Main supply
5	Optional relay C
6	Optional relay NO

Mains input 80…265 AC auto. Fuse 1.0 A.

Hub Connector Setup

Hub Connector	Setup
1	Fused 5V DC
2	Open Collector Output
3	SW1 input
4	SW2 input
5	SW3 input
6	0V

Total Inhibit Input

By shorting SW1 terminals 3 and 6 on the Hub Connector, the totalization on all inputs are inhibited from counting up.

Manifold

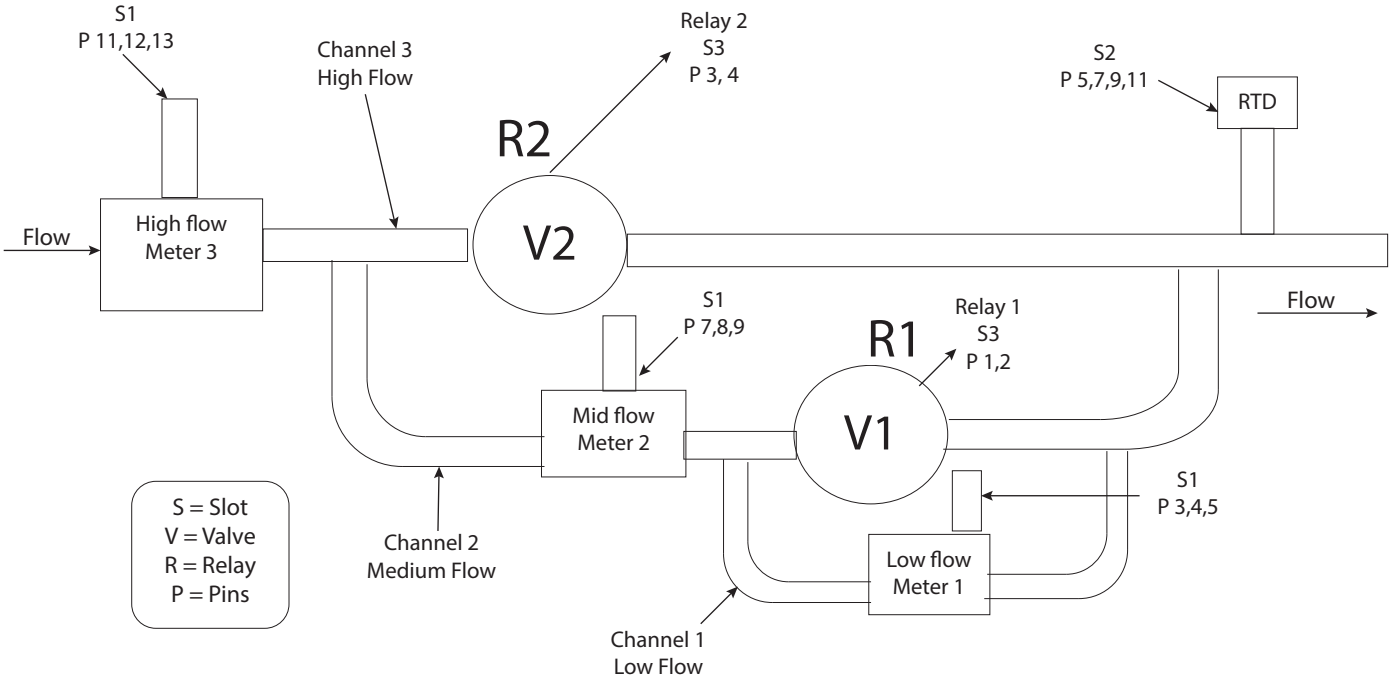

Figure 2: Manifold system installation example

OPERATING THE FLOW COMPUTER

Use the front panel keypad (*Figure 3*) and the remote control (*Figure 4*) to program the Model 4050 flow computer. The remote has more functions than the front panel keypad.

Front Panel Keypad

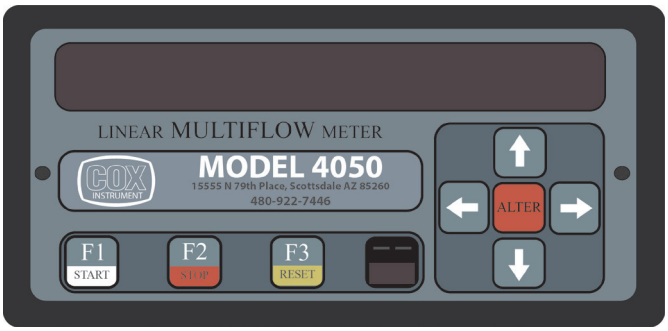

Figure 3: Front panel keypad

Key	Key Name	Key Function
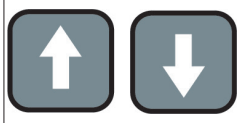	**Up Arrow** **Down Arrow**	Scrolls through information screens.
	Left Arrow **Right Arrow**	Toggles between *Primary* and *Secondary* menus.
	ALTER	Selects option to be changed.
	F1/START	Activates function 1
	F2/STOP	Activates function 2
	F3/RESET	Activates function 3

Remote Control

Figure 4: Remote control

⚠CAUTION

KEEP THE REMOTE CONTROL IN A SAFE AND SECURE PLACE FOR COMPLETE SECURITY.

Key	Key Name	Description
	Up Arrow **Down Arrow**	Scrolls through information screens.
	Left Arrow **Right Arrow**	Toggles between *Primary* and *Secondary* menus.
	ALTER	Selects option to be changed.
	SHIFT	Prepares the remote to execute a secondary function for a key, noted in the sub-label on each key.
	ENTER	Used to enter information or back out of a menu.
	CLEAR	Used to clear data.

Key	Key Name	Description
EXP UNIT	**EXP/UNIT**	Used to set an exponent when entering numbers. Sub-function is used to change the unit type.
. +/−	**. +/−**	Used to enter a decimal point when entering numbers. Sub-function is used to change a value to negative or positive.
0 PRE−	**0/PRE-**	Used to enter 0.
1 BATCH	**1/BATCH**	Used to enter 1. Sub-function activates batching function.
2 F1	**2/F1**	Used to enter 2. Sub-function activates function 1.
3 F2	**3/F2**	Used to enter 3. Sub-function activates function 2.
4 F3	**4/F3**	Used to enter 4. Sub-function activates function 3.
5 F4	**5/F4**	Used to enter 5. Sub-function activates function 4.
6 CODE	**6/CODE**	Used to enter 6. Sub-function lets you enter a code to enter Programming mode.
7 TEST	**7/TEST**	Used to enter 7.
8 HELP	**8/HELP**	Used to enter 8.
9 FACTOR	**9/FACTOR**	Used to enter 9.

Front Panel Test Mode

NOTE: You must use the front panel keypad to enter *Front Panel Test* mode.

Use *Front Panel Test* mode to enable or disable the remote, test the remote reception, view the Serial number, and turn the audible keyclick ON or OFF.

Press **LEFT/RIGHT** arrows on the front panel at the same time to enter *Front Panel Test* mode. Press **UP/DOWN** arrows to display the menu options. Press **ALTER** to toggle each option.

Menu Option	Description
ENABLE IR	Enable or disable the remote control
KEY CLICK	Enable or disable the audible keyclick
TEST REMOTE	Test the remote control. The last input is displayed on the right
MAN 0000	Display the serial number of your computer
ALTER TO EXIT	Press **ALTER** to exit *Front Panel Test* mode

Disabling and Enabling the Remote Control

Since the remote control works with any COX computer, it may be necessary to disable the remote control function on one computer when there are multiple computers in close proximity. Use *Front Panel Test* mode to disable the remote control function:

1. Press **LEFT/RIGHT** arrows on the front panel at the same time to enter the *Front Panel Test* mode.
2. Press **UP/DOWN** arrows to highlight *ENABLE IR*.
3. Press **ALTER** to select **N** for *ENABLE IR*.

Once locked out, the lock LED light in the lower square panel of the flow computer lights up and the remote control does not affect the locked computer.

NOTE: With the remote off, the menus of the flow computer can be viewed using the front panel keypad, but anything that requires the remote is not available.

To restore remote control function, use the same process, but select **Y** for the *ENABLE IR* option.

Troubleshooting the Remote Control

If you enter a code to access the programming mode and the computer displays *WRONG CODE*, check the code and re-enter. If the code is correct and the computer still shows *WRONG CODE*, the remote control batteries may need changing.

If you are experiencing key bounce or you are unable to use the remote control keys, there is probably interference. Problems may occur when trying to operate the remote control in direct sunlight, or while using sodium lights or other specialized lighting. If problems continue, please contact your supplier.

Using the Remote Control or Front Panel Keypad

You can use the remote control or the front panel keypad interchangeably, as long as your choice has the keys that you need. For example, some menus require you to enter numbers and the front panel keypad does not have number keys. In those situations, use the remote control. It may be easier to use the remote control exclusively.

THE INSTRUCTIONS IN THIS MANUAL ARE WRITTEN FOR THE REMOTE CONTROL UNLESS OTHERWISE INDICATED.

Manifold System

The flow computer can be used to control a manifold system like the one in *Figure 5*. See the Turbine Meter Manifold System data sheet, available in the Resource Library at *www.badgermeter.com*, for more information. The flow computer receives signals from the meter measuring flow. The flow computer can then calculate the valves that should be open or closed, and opens or closes the valves automatically, if necessary.

Using the example in *Figure 5*, Valve 2 is closed and Valve 1 is open. If the flow increases past a pre-defined threshold, the computer sees the change in the signal from Meter 2. The computer then opens Valve 2 and starts monitoring the signal from Meter 3. Now the liquid can flow as it should. If the flow decreases, the computer closes Valve 2.

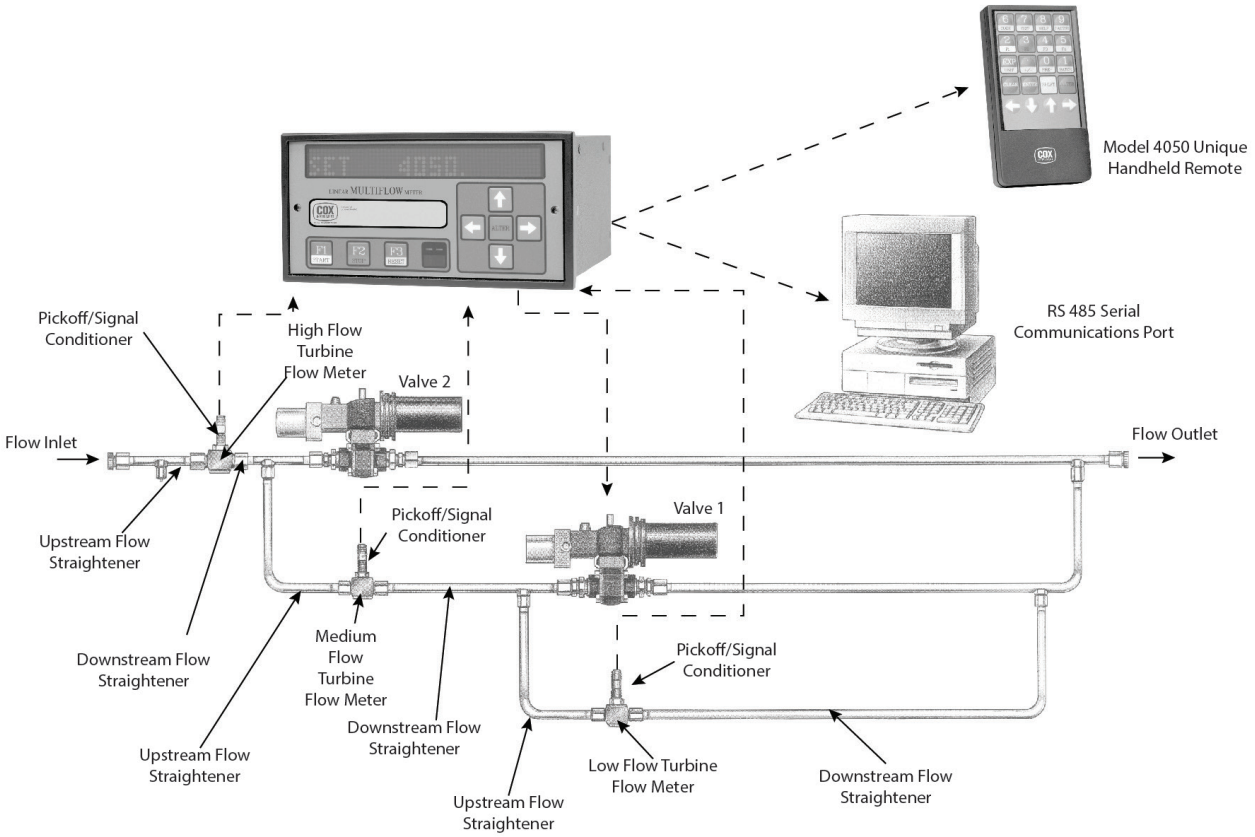

Figure 5: Manifold system example

Menu Flowchart

This chart shows the menu structure of the Model 4050 Flow Computer.

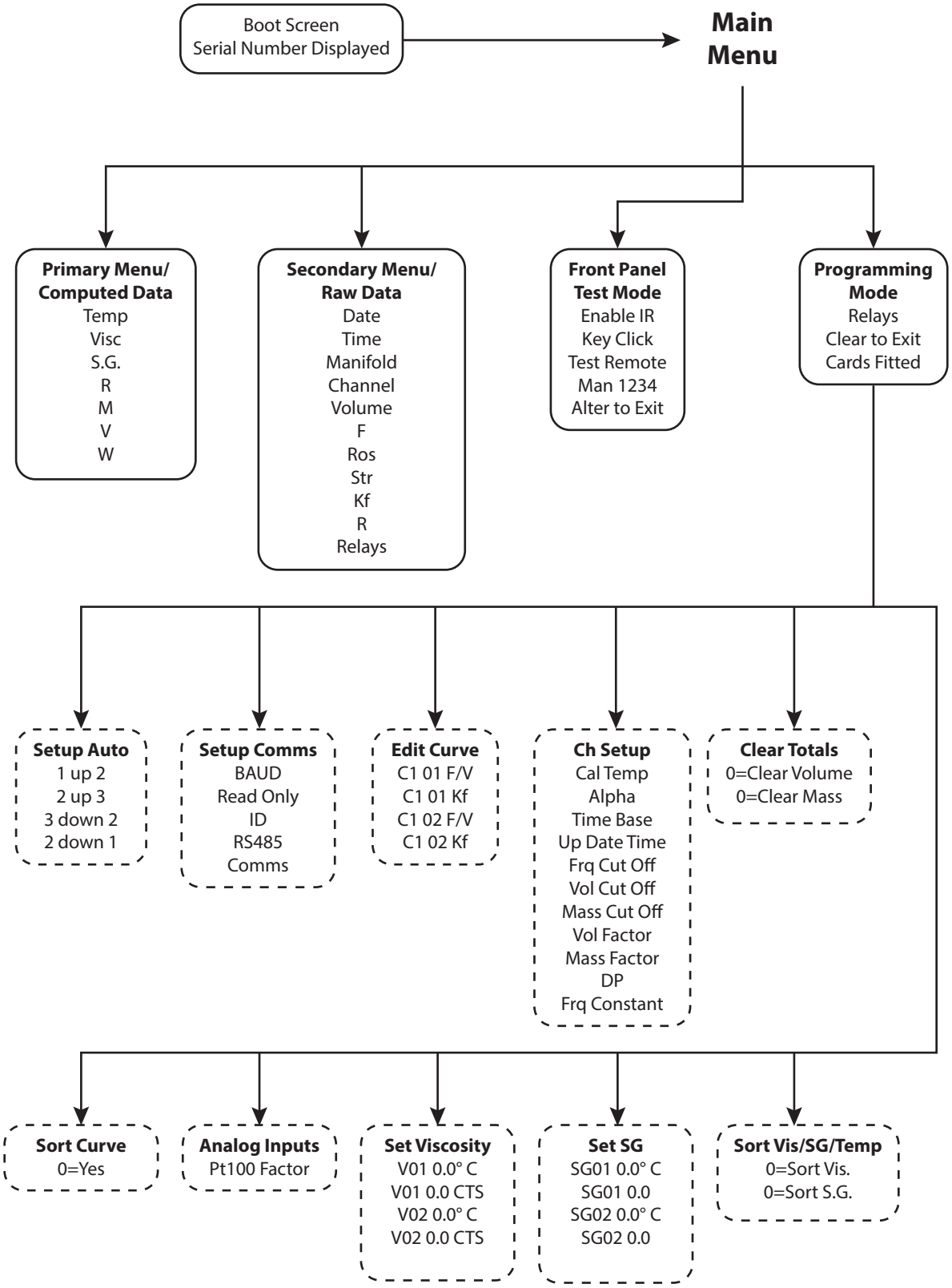

Figure 6: Menu flowchart

NAVIGATING THE MENUS

NOTE: Refer to *"Menu Flowchart" on page 15* for a visual representation.

THE INSTRUCTIONS IN THIS MANUAL ARE WRITTEN FOR THE REMOTE CONTROL UNLESS OTHERWISE INDICATED.

When the computer is powered up, the serial number displays for approximately 5 seconds, then the first menu displays.
Press **LEFT/RIGHT** arrows to toggle between the *Primary* and *Secondary* menus.
Press **UP/DOWN** arrows to scroll through menu options.

NOTE: The order of each menu depends on the order of the cards in the flow computer.

Primary Menu

The *Primary* menu displays the flow computer status and measurements. The menu options cannot be changed.

Menu Option	Description	Default Units
r^1, r^2 or r^3	Volume Flow Rate for channel 1, 2 or 3	L/hr
m^1, m^2 or m^3	Mass Flow of turbine 1, 2 or 3	kg/hr
v^1, v^2 or v^3	Total Volume of turbine 1, 2 or 3	L
w^1, w^2 or w^3	Total Weight of turbine 1, 2 or 3	kg/hr
Temp	Temperature from Pt100	° C
Visc	Viscosity of fluid	CTS
S.G.	Specific Gravity of fluid	—

Secondary Menu

The *Secondary* menu options that you can alter are described in the following sections.

Menu Option	Description	Default Units
Date	Date	dd/mm/yyyy
Time	Time	hr:min:s
Manifold	Manifold status	ON or OFF
Channel	Current running channel	1, 2 or 3
Volume or Mass	Volume or Mass is currently selected	—
f^1, f^2 or f^3	Frequency for channel 1, 2 or 3	Hz
Ros^1, Ros^2 or Ros^3	Corrected Roshkoe factor for turbine 1, 2 or 3	—
Str^1, Str^2 or Str^3	Calculated Strouhal value for turbine 1, 2 or 3	—
Kf^1, Kf^2 or Kf^3	Corrected K-factor for turbine 1, 2 or 3	—
R^1	Ohms from Pt100	Ω
Relays	Current state of the relays	—

Manifold

Use this option to turn the Auto-Manifold System on or off. The Auto-Manifold System allows the flow computer to change channels automatically. The selected channel determines which valves are open or closed, which relays are active and which meter the flow computer takes readings from.

⚠CAUTION

FOR SAFETY REASONS, YOU MUST USE THE REMOTE CONTROL TO CHANGE THE STATE OF THE MANIFOLD SYSTEM.

When *Manifold* is ON, switching channels is automatic, based on the user entered values. These trip points are in frequency for any Hz/u meter. You can set the flow computer for multiple meters and a relay state change at particular setpoints.

When *Manifold* is OFF, switching channels is manual. Change meters with the *Channel* menu option.

1. Navigate to the *Manifold* menu option.
2. Press **ALTER** to toggle this option ON or OFF.

Channel

Use *Channel* to change which channel is active. This option displays the current channel number. Press **ALTER** to change the channel number.

NOTE: To use this option, make sure *Manifold* is set to OFF, otherwise the system will automatically change the channel.

Channel Number	Effect
Channel 1	Valves 1 and 2 closed, Low flow meter
Channel 2	Valve 2 closed, Medium flow meter
Channel 3	Valves open, High flow meter

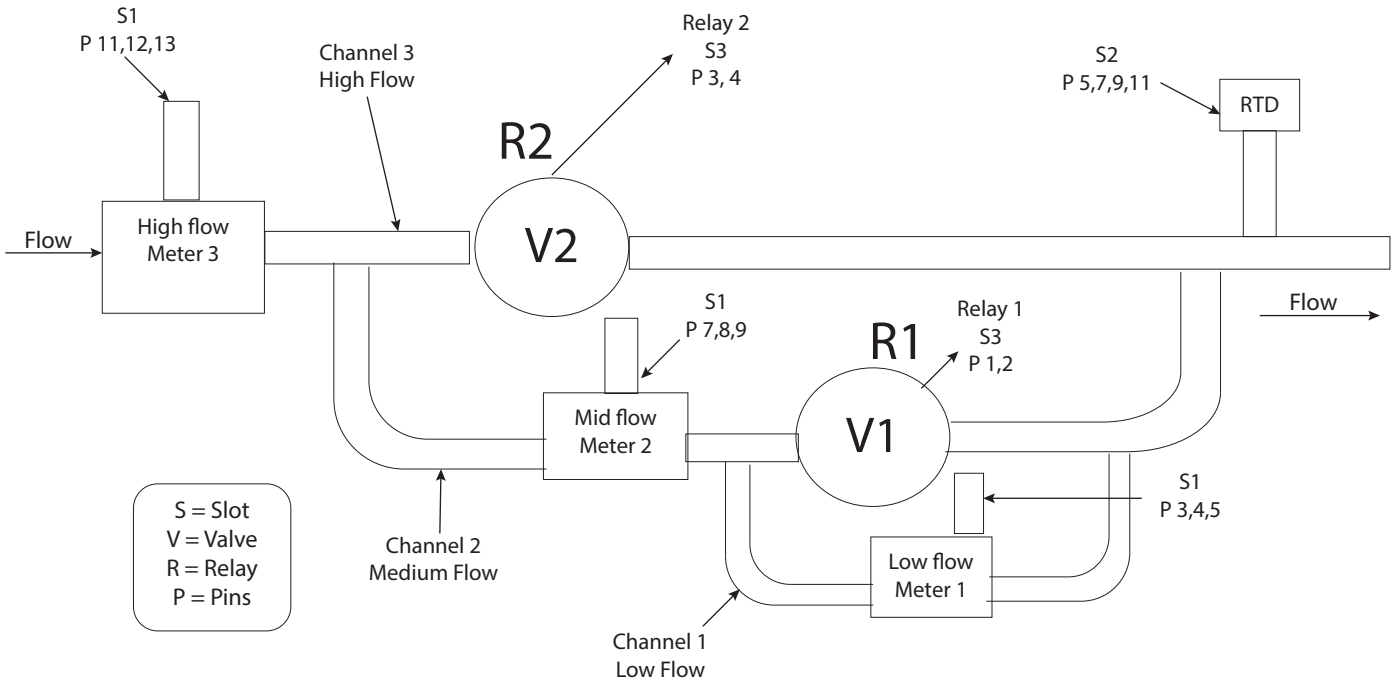

Figure 7: Common installation channels

Vol On / Mass On

Use this option to select the flow rate units. Press **ALTER** to select *VOLUME* or *MASS*. Each time the channel changes, the screen displays the new channel and the volume or mass flow rate. If the computer is fitted with the right card, the analog output represents volume or mass flow rate.

Date and Time

User this option to set the real time clock.

1. Navigate to either *Date* or *Time*.
2. Press **ALTER**. The cursor begins flashing on the screen.
3. Use the number keys to enter the information, or use **LEFT/RIGHT** arrows to highlight a digit, then use **UP/DOWN** arrows to change the digit.
4. Press **ENTER** to save your changes. The computer returns to the *Secondary* menu.

Changing the Menu Option Names and Unit Labels

In the *Primary* or *Secondary* menus, you can change the menu option names and unit labels of any menu option with units. For example, you could change *r 0.0 L/hr* to *vfr 0.0 GPH*.

1. Press **UP/DOWN arrows** to select a menu option.
2. Press **SHIFT**, then **EXP/UNIT**. The cursor begins to flash at the far right side of the screen.
3. Change the unit labels.
   a. Press **LEFT/RIGHT** arrows to change the cursor position.
   b. Press **UP/DOWN** arrows to select the character for that position.
4. Change menu option name.
   a. Press **ALTER** to move the cursor to the left side of the screen.
   b. Press **LEFT/RIGHT** arrows to change the cursor position.
   c. Press **UP/DOWN** arrows to select the character for that position.
5. Press **ENTER** to store your changes.

IMPORTANT

Where a maximum number of digits are to be displayed (for example, when displaying a total), limit the menu option name to four or fewer characters so the name and numbers do not overlap. If they overlap, the screen can appear to be corrupted.

NOTE: In some cases, the computer display is fixed and cannot be changed.
If you are in a curve menu and you change the units only, all points in that curve are changed.

PROGRAMMING MODE

Use *Programming* mode to set up and program Auto-Manifold and other features of the flow computer.

THE INSTRUCTIONS IN THIS MANUAL ARE WRITTEN FOR THE REMOTE CONTROL UNLESS OTHERWISE INDICATED.

Enter Programming Mode

1. Navigate to the code entry screen using one of two methods:
   - ◊ Press **LEFT/RIGHT arrows** until *Secondary* displays on the screen, then press **ALTER**, or
   - ◊ Press **SHIFT**, then the **6/CODE** key.
2. When the screen displays *CODE *****, enter the four-digit serial number using the number keys. The serial number is on the back of the computer, on the screen when the computer is first powered up, or on the screen in the Front Panel Test mode.
3. If you enter the wrong code, press **CLEAR** to clear the entry. Then try again.

The Programming menu opens when the correct code is entered.

Exit Programming Mode

Press **CLEAR** to exit programming mode when you are finished programming.

If you press the **ALTER** key by mistake while selecting the secondary menu, wait 20 seconds and the primary menu displays.

Automatic Lockout

In some cases the flow computer itself inhibits the **ALTER** key as it may be performing a sequence of events that cannot be interrupted, like batching. Wait until the flow computer is finished with the process.

Programming Mode Options

Menu Option	Description
Setup Auto	Opens the menu to set up setpoints for automatic switching
Setup Comms	Set up the Port settings
Edit Curve[1], Edit Curve[2] or Edit Curve[3]	K-Factor programming for channel 1, 2 or 3
Ch[1], Ch[2] or Ch[3] Setup	Channel setup for channel 1, 2 or 3
Clear Totals[1], Clear Totals[2] or Clear Totals[3]	Use to clear measurement totals for channel 1, 2 or 3
Sort Curve[1], Sort Curve[2] or Sort Curve[3]	Use the sort function on curve 1, 2 or 3
Analog Inputs	Calibrate the PT100 card
Set Viscosity	Program fluid viscosity
Set SG	Program fluid specific gravity
Sort Vis/SG/Temp	Use the sort function on viscosity, specific gravity or temperature
Relays	Manually open or close relays
Clear to Exit	Press **CLEAR** to return to the Primary Menu
Cards Fitted	Displays installed cards

Setup Auto/Manifold Auto-ranging Trip Points

Use *Setup Auto* to set values as setpoints. Use setpoints to let the flow computer know when to change channels. See *"Manifold System" on page 14* for more information about channels.

1. Navigate to the *SETUP AUTO* option.
2. Press **ALTER** to display the auto-ranging setpoints.
3. Press **UP/DOWN** arrows to access each point.
4. Press **CLEAR** to clear the setting and enter a new number, or just enter a number to replace the old one.
5. Press **ENTER** to save the new number.
   Press **ALTER** to back out of the menu and revert to the previous number.
   Press **CLEAR** to delete any number you entered to start over.

Menu Option	Unit	Description
1up²	0.0 Hz	Shows the trip point in Hertz to change from channel 1 (low flow) to channel 2 (medium flow)
2up³	0.0 Hz	Shows the trip point in Hertz to change from channel 2 (medium flow) to channel 3 (high flow)
³down2	0.0 Hz	Shows the trip point in Hertz to change from channel 3 (high flow) to channel 2 (medium flow)
²down1	0.0 Hz	Shows the trip point in Hertz to change from channel 2 (medium flow) to channel 1 (low flow)

When setting these values, leave some leeway between setpoints. For example, if channel 1 is set and calibrated for 20…800 Hz and channel 2 for 500…1200 Hz, set setpoint 1 to 2 at about 600 Hz and set setpoint 2 to 1 at about 550 Hz. This allows room for variance and avoids getting the flow computer into a switching loop.

Automatic Switching

When a setpoint is activated, the flow computer changes the selected channel. The flow computer then powers up a relay and closes a valve, or powers down a relay and opens a valve. In fail safe mode, the valves automatically open with no power and close with power.

Event	Result
Low flow signal from meter 1	Relays 1 and 2 powered up, closing valves for channels 2 and 3
Medium flow signal from meter 2	Relay 2 powered up, closing the valve for channel 3
High flow signal from meter 3	Both relays powered down

Setup Comms

Use this menu to configure communications with the PC.

1. Navigate to *SETUP COMMS.*
2. Press **ALTER** to open the *Setup Communications* sub menu.
3. Press **UP/DOWN arrows** to cycle between sub menu options. Press **ALTER** to change individual settings.
4. Press **ENTER** to exit.

Option	Settings	Description
BAUD	9600, 1200 or 19200	Baud rate
READ	ONLY	The system is currently set to read only
ID	a, b, c and more	Select ID to scan from a…z lower case only
RS485	FAST, MEDIUM or SLOW	Delay for bus transceiver
COMMS	FAST, MEDIUM or SLOW	Delay between Char output

Edit Curve

Use the Edit Curve menu to program the flow curve, which the computer uses to calculate the flow rate using the K-factor (counts per unit measured) and frequency/viscosity. The calculation uses the frequency card. You can program a curve for each channel.

1. In the Programming Mode Menu, navigate to *Edit Curve*[1], *Edit Curve*[2] or *Edit Curve*[3].
2. Press **ALTER** to display the first point of calibration.
3. Press **UP/DOWN** arrows to select the calibration point to enter or change. The left side of the screen always shows the curve and point number (for example, c1[01]). The right side shows the unit labels (for example, F/V or Kf).
   - ◊ To change the unit labels, press **SHIFT** then **EXP/UNIT**.
4. Press **CLEAR** and enter the numeric value to enter/change data. The computer reads from the lowest to highest K-factor and frequency/viscosity, so each point of the curve should be entered from lowest to highest. The screen shows SET on the left, indicating that data is being entered.
   - ◊ To obtain +/- values, press **SHIFT** then **+/-**.
   - ◊ To enter an exponential value enter the numeric value, press **EXP/UNIT** and then enter a number for the exponent.
   - ◊ Press **CLEAR** to delete incorrect data entry.
5. Press **ENTER** to set the data. The screen displays the entered data with the curve and point number.
6. Press **ENTER** to exit this menu and return to Programming Mode.

Ch Setup

Use this menu option to set up a frequency channel.

NOTE: Some options may not appear in your specific application.

1. Navigate to the desired *Ch Setup* menu option.
2. Press **ALTER** to display the channel setup options.
3. Press **UP/DOWN arrows** to scroll through the options.
4. Press **ENTER** or **ALTER** to change the values.
5. Press **CLEAR** to return to Programming Mode.

Channel Setup Sub Menu Options

Sub Menu Option	Description
Cal Temp	Calibration temperature of sensor used for Strouhal and Roshkoe
Alpha	Alpha factor used for Strouhal and Roshkoe calculation
Time Base	Used to calculate flow rate in K-Factors or Total in flow 1, 60 or 3600 based on time
Up Date Time	0.02 sec to 9999 secs for update control
Frq Cut Off	When below this value of frequency, then FRQ = 0.0
Vol Cut Off	When below this value of volume flow, then Vol Flow = 0.0
Mass Cut Off	When below this value of mass flow, then Mass Flow = 0.0
Vol Factor	Multiply Volume flow rate by this factor (for special applications)
Mass Factor	Multiply Mass flow rate by this factor (for changing to pounds 8.32778)
DP	Options 0…4
Frq Constant	Default 2.0…7 used to adjust the internal crystal frequency

Clear Totals

Use this option to clear measured totals for each channel.

1. Navigate to the *Clear Totals* option.
2. Press **ALTER** to display available totals.
3. Press **UP/DOWN** arrows to select the total to clear.
4. Press **0** to clear the total.
5. Press **ENTER** or **CLEAR** to return to the previous menu.

NOTE: There maybe more than one total that needs to be cleared (for example, volume and mass totals). Each total must be cleared separately.

Sort Curve

Use the *Sort Curve* menu to sort the points on the curve. You can sort the curves for any of the three channels. Each curve works from lowest to highest entry. If entered this way, the sort routine does not need to be used. If you add a point that is not the highest point, use the sort curve function.

1. Navigate to the *SORT CURVE* option for the turbine you need to sort.
2. Press **ALTER** to enter the sub menu. The screen displays *Sort 0=Yes*.
3. Press **0** to use the sort function on this curve.
4. Press **CLEAR** or **ENTER** to exit.

Analog Inputs

Use the *Analog Inputs* menu to setup the PT100 input for calibration.

1. Navigate to *ANALOG INPUTS*.
2. Press **ALTER** to enter the sub menu. The screen displays *PT100 factor*.
3. Press **ALTER** or **ENTER** to see the PT100 Factor. Alternately, **CLEAR** to exit.
4. Enter a number and press **ENTER** to edit the PT100 Factor.
5. Press **ENTER** to return to the previous menu.

Set Viscosity/Set SG

Pt100 Input Card Edit Curves

This section describes how to program any of the potential curves in the system, including specific gravity and viscosity for an individual chemical and its characteristics.

1. Navigate to *SET VISCOSITY* or *SET S.G.*
2. Press **ALTER** to display the first point of calibration.
3. Press **UP/DOWN** arrows to select the calibration point to be entered or altered. The left side of the screen always shows the curve and point number (for example $c1^{01}$). The right side shows the units.

NOTE: You can change the units by pressing **SHIFT**, then **EXP/UNIT**.

4. Press **CLEAR** and enter a numeric value, or enter a numeric value to enter data points.
5. Press **ENTER** to save the entered value. The screen displays the entered data with the channel and point number.
6. Press **ENTER** to exit this menu and return to the previous one.

Sort Vis/SG/Temp

Use the Sort Vis/SG/Temp menu to sort the curves for Viscosity, Standard Gravity, and Temperature. Each curve works from lowest to highest entry. If entered this way the sort function does not need to be used. If you add a point that is not the highest, use the sort curve function.

1. Navigate to the *Sort Vis/SG/Temp* option.
2. Press **ALTER** to enter the sub menu. The screen displays *0=Sort Vis.*
3. Press **UP/DOWN** arrows to select the curve to sort.
4. Press **0** to sort the selected curve.
5. Press **ENTER** or **CLEAR** to exit.

Relays

Use this option to manually open or close the relays.

1. Navigate to the *Relays* option.
2. Press **ALTER** to manually open or close the relays.

Cards Fitted

This option is for information only.

1. Press **ALTER** to display the first card slot.
2. Press **UP/DOWN** arrows to display each slot and its status.

Example of Cards Fitted

Option	Example	Description
1A	Manifold Hzv	Indicates the first slot has a Frequency Card setup for Manifold Operation in Hz/u
1B	Manifold Hzv	Channel 2 as above
1C	Manifold Hzv	Channel 3 as above
2A	Ana-Input	Slot 2 has an Analog input card fitted
2B	Empty	Indicates no further options in this slot
2C	Empty	—
3A	Relay	Slot 3 has a relay card fitted. The number of relays depends on those fitted.
3B	Empty	—
3C	Empty	—
4A	Empty	—
4B	Empty	—
4C	Empty	—
5A	Empty	—
5B	Empty	—
5C	Empty	—

Each card and alpha identifier depends on the card and its function. You can use this information to check the integrity of the card fitted, its operation and whether or not it is in communication with the main hub.

RS232/RS485

Command Structure

Viewing Data from the Flow Computer

All data is sent and received as ASCII HEX pairs, the mathematics used in PIC Hex format. Two example routines are included to convert this data into PC or ASCII strings. The PIC Hex format is always 4 bytes and represents a 32-bit floating-point number system. To read data use the following format.

Description	ID	View	Hub/Slot	Reg/Mem	Slot	Address	No.Bytes	CR
String	a	V	H	R		00A0	04	CR
Hex	61	56	48	52		00A0	04	0D
ASCII Hex	36 31	35 36	34 38	35 32		30 30 41 30	30 34	0D

NOTE: Reg/Memory lets the user view live data within the processor's own working registers, or the flash memory address space used to store constant and curve data. The Hub is the main processor (the card connected to the serial link), while the SLOTs need to be addressed as follows.

Description	ID	View	Hub/Slot	Reg/Mem	Slot	Address	No. Bytes	CR
String	a	V	S	M	04	0600	04	CR
Hex	61	56	49	4D	04	0600	04	0D
ASCII Hex	36 31	35 36	34 39	34 44	30 34	30 36 30 30	30 34	0D

SLOT ID	Hex	ASCII Hex	Position
4	04	30 34	1A
5	05	30 35	1B
6	06	30 36	1C
7	08	30 38	2A
8	09	30 39	2B
9	0A	30 41	2C
10	0C	30 43	3A
11	0D	30 44	3B
12	0E	30 45	3C
13	10	31 30	4A
14	11	31 31	4B
15	12	31 32	4C
16	14	31 34	5A
17	15	31 35	5B
18	16	31 36	5C

General Address

To obtain the list address for your computer, please send an email to *indorders@badgermeter.com* to request a complete list. The conversion routines of the PicHex to standard PC/ASCII data are included.

COMPUTER INTERFACE INFORMATION

Pin Settings

		RS232	RS485
9 way D	**Pin 2**	RX	B
	Pin 3	TX	A
	Pin 5	0V	0V

Code Example

```
        Cal_dec(returned decimal value, asciihex string from input buffer 8 bytes, number of decimal places,
        returned ascii string)
        cal_dec(a, Left$(rx_buff, 8), 3, b)
    Label27.Caption = b

Sub cal_dec(dec, result, dp_pos, result_str)
    dec = 0
    eb = Left$(result, 2)
    If eb = "00" Then GoTo the_res_is_zero
    sethex = Right$(result, 6)
    e = Val("&h" + eb) - 127
    bin_data = ""

    For p = 1 To 6
    Select Case UCase(Mid$(sethex, p, 1))
    Case "0" nibble = "0000"
    Case "1" nibble = "0001"
    Case "2" nibble = "0010"
    Case "3" nibble = "0011"
    Case "4" nibble = "0100"
    Case "5" nibble = "0101"
    Case "6" nibble = "0110"
    Case "7" nibble = "0111"
    Case "8" nibble = "1000"
    Case "9" nibble = "1001"
    Case "A" nibble = "1010"
    Case "B" nibble = "1011"
    Case "C" nibble = "1100"
    Case "D" nibble = "1101"
    Case "E" nibble = "1110"
    Case "F" nibble = "1111"
    End Select
    bin_data = bin_data + nibble
    Next p
    If Left$(bin_data, 1) = "1" Then
    sign = "-"
```

```
        Else
        sign = ""
        End If
        dec = 1
        For p = 2 To Len(bin_data)
        Bit = Mid$(bin_data, p, 1)
        If Bit = "1" Then dec = dec + 2 ^ -(p - 1)
        Next
        dec = (2 ^ e) * dec
        wiv_sign = sign + Str(dec)
        dec = Val(wiv_sign)
the_res_is_zero:
        Select Case Val(dp_pos)
        Case 1
        result_str = Format(dec, "0.0")
        Case 2
        result_str = Format(dec, "0.00")
        Case 3
        result_str = Format(dec, "0.000")
        Case 4
        result_str = Format(dec, "0.0000")
        Case 5
        result_str = Format(dec, "0.00000")
        Case 6
        result_str = Format(dec, "0.000000")
        Case 7
        result_str = Format(dec, "0.0000000")
        Case 8
        result_str = Format(dec, "0.00000000")
        Case 9
        result_str = Format(dec, "0.000000000")
        Case Else
        result_str = Format(dec, "0")
        End Select
End Sub
```

SPECIAL INSTRUCTIONS

Calibrating the PT100

Repeat these steps as needed, up to 6 ANA per card.

1. Make sure to connect a known resistance or RTD calibrator to the PT100 input (2, 3 or 4 wire).
2. Set the PT100 factor to 1.0.
3. Exit *Programming* mode and observe the ohms (which now displays the bits).
4. Divide the actual resistance by the observed bits. The result is now the factor for the PT100. The temperature calculation from the resistance is automatic and uses a 2nd order polynomial e.
5. Return to the PT100 factor menu and set the factor equal to the result from step 4.

PT100 FACTOR – Input bits × PT100 factor = Ohms

Calculation of Ohms to Temperature

The flow computer calculates the temperature from the measured resistance in ohms using a standard polynomial equation. A separate set of constants is used for -200° C…0° C than for 0° C…200° C.

Description of Unit Calculations

For each input there is a linearization curve which must be programmed for correct operation of the computer.

NOTE: Data for each curve may be entered in any order. The computer sorts all data into numerical order when you return to the main menu on completion of programming. This may result in data moved to a different point if it was not entered numerically.

K-Factor Calculation

The inputs and linearization graphs are processed as indicated below.

1. A Pt100 input is provided for measuring the fluid temperature.
2. The flow computer converts this input to a 4…20mA signal.
3. The flow computer processes that signal using the five point mA versus temperature to obtain the temperature.
4. The flow computer uses the 30 point temperature versus viscosity curve to calculate the viscosity from the temperature.
5. The flow computer uses the temperature measurement to calculate the Strouhal and Roshkoe numbers, using the formulas from the chart below.
6. The flow computer uses the Stouhal and Roshkoe numbers to compensate the K-factor.

Strouhal Number	$1 + (3x\ \alpha\ \delta T)$
Roshkoe Number	$1 + (2 x\ \alpha\ \delta T)$
Where:	
α	Temperature coefficient
δT	Calibration Temperature – Actual Temperature

Turbine Input

Three voltage pulse inputs are provided for connection to three turbine pre-amplifiers. The flow computer does the following:

1. Measures the frequency of each turbine input.
2. Divides each frequency by the viscosity to obtain the uncorrected Hz/Viscosity.
3. Multiplies the derived value by the Roshkoe number to obtain the corrected Hz/Viscosity.
4. Uses that value to obtain an uncorrected turbine K-factor using the 30 point frequency/viscosity versus K-factor curve.
5. Multiplies the derived value by the Strouhal number to obtain the corrected K-factor.
6. Divides the measured frequency by the corrected K-factor to obtain the flow rate in volume per second, which may then be multiplied by the desired time base (for example, 60 for volume per minute).
7. Converts the volume flow rate to the mass flow rate using the 30 point temperature versus S.G. curve.
8. Totalizes the mass flow rate.

NOTE: You can prevent totalization by shorting together terminals 34 and 36 at the rear terminal block.

Auto-ranging Mode

The computer operates in either auto-ranging mode (MANIFOLD ON), or in non-auto-ranging mode (MANIFOLD OFF).

In auto-ranging mode, three valve control relays are used to select the correct channel in accordance with the programmed frequency setpoints. This procedure is described in detail in the auto-ranging section. See *"Setup Auto/Manifold Auto-ranging Trip Points" on page 20*.

As the computer changes the relay contacts, it automatically displays the status of the channel to which it has switched. For example, while running on channel 1 the flow is increased to switch to turbine 2. The menu then changes to rt^2 or mas^2 according to the option selected at that time. In auto-ranging mode, the flow rate of all turbines is totalized on tot^1. In non-auto-ranging mode, the flow rate is referred to the identifier applicable to the channel in operation.

Hz/u – K-factor system

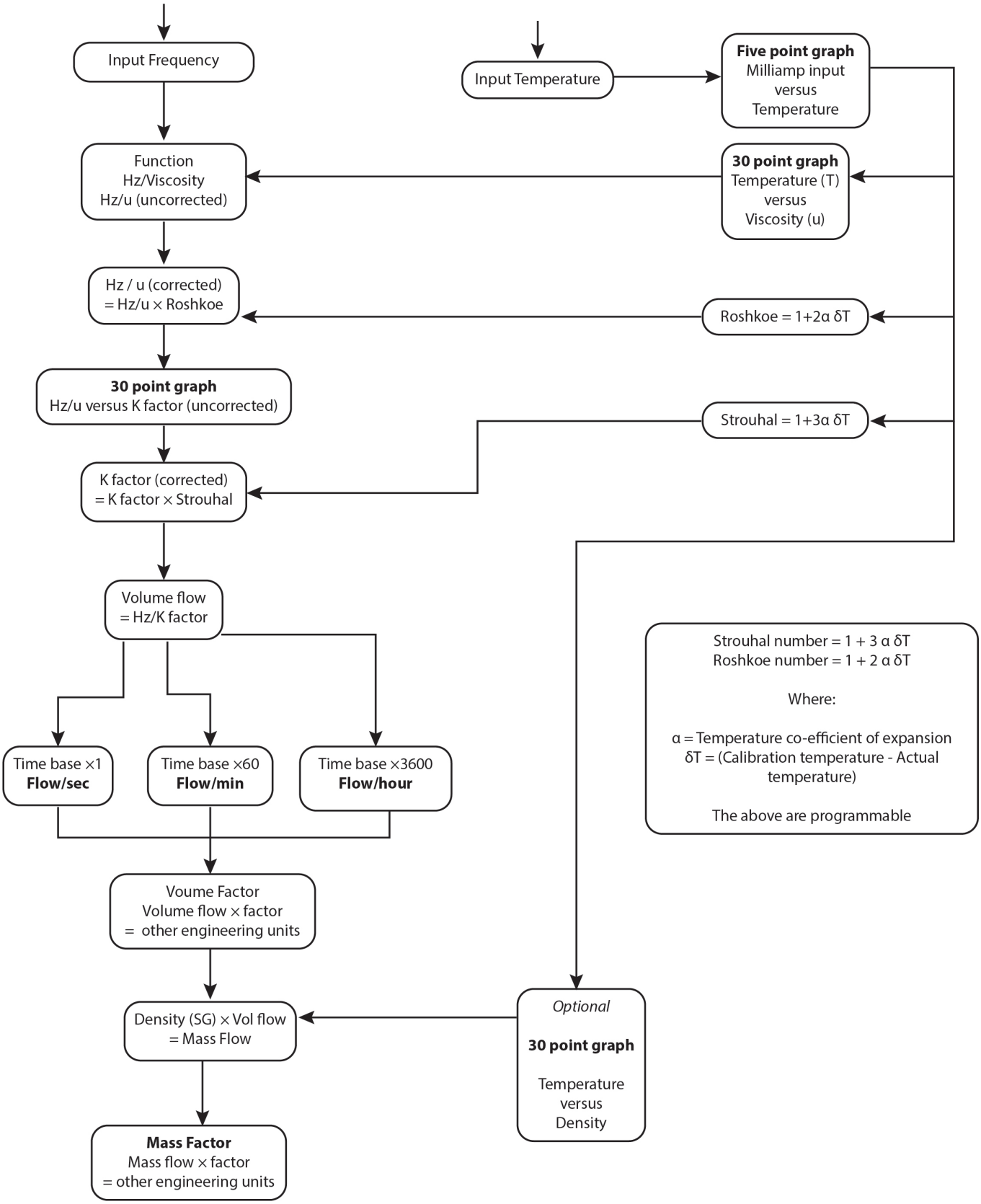

Figure 8: Hz / u — K-factor system

SPECIFICATIONS

Frequency	32-point linearization curve of frequency/viscosity versus counts per units measured by interpolation between points and, by extrapolation, from the first and last two points of the curve. An engineering factor is included for the conversion of units.		
	Range	0.5 Hz…65 kHz	
	Signal Conditioning	Standard	TTL type signal input or voltage pulse
		Optional	Reed switch: sine wave, low level input to base of PNP transistor and two-wire modulated current frequency inputs
	Sensor Excitation Voltage	Standard	12V DC
		Optional	User adjustable, 1.5…24V DC
Analog Inputs	**Inputs**	5-point linearization; 4…20 mA or 0…10V DC	
	Resolution	16-bit	
	Accuracy	± 0.001% of full scale	
Analog Outputs	**Outputs**	4…20 mA or 0…10V DC	
	Resolution	16-bit	
	Accuracy	± 0.001% of full scale ± least significant digit	
Pulse Outputs	TTL or open collector outputs with a range of 1 Hz…1 kHz		
Relays	0.25A at 240V AC, 9 (dry relay)		
Power Supply	Mains input or DC input; 110/240V AC is selectable on a switch inside the computer		
	220…240V AC, 50…60 Hz	Draws approximately __ mA (Depends on options fitted)	
	110…120V AC, 50…60 Hz	Draws approximately __ mA (Depends on options fitted)	
	12V DC	Draws approximately __ mA (Depends on options fitted)	
	24V DC	Draws approximately __ mA (Depends on options fitted)	

⚠CAUTION

ALTHOUGH THE EQUIPMENT HAS PROTECTION AND CONFORMS TO CE APPROVALS, FOR TROUBLE FREE OPERATION THE COMPUTER SHOULD BE CONNECTED TO A CLEAN POWER SUPPLY – MEANING FREE OF NOISE AND NOT IN THE SAME PHASE AS HEAVY MACHINERY.

ANY MACHINERY USING HEAVY CONTACTS IN THE IMMEDIATE PROXIMITY OF THE COMPUTER SHOULD BE SUITABLY SUPPRESSED. INDUCTIVE LOADS SWITCHED BY THE VOLT-FREE RELAY CONTACTS SHOULD BE FITTED WITH SUITABLE SNUBBER NETWORKS.

INTENTIONAL BLANK PAGE

Control. Manage. Optimize.

Cox Instruments is a registered trademark of Badger Meter, Inc. Other trademarks appearing in this document are the property of their respective entities. Due to continuous research, product improvements and enhancements, Badger Meter reserves the right to change product or system specifications without notice, except to the extent an outstanding contractual obligation exists. © 2021 Badger Meter, Inc. All rights reserved.

www.badgermeter.com