Preso®
Differential Pressure Flow Meters

Ellipse® Pitot Tube Meter

Annular Threaded Hot-tap Steam Flow Meter

DESCRIPTION

The Ellipse® Annular Threaded Hot-tap Steam Flow Meter is a multi-ported, self-averaging differential pressure flow element for saturated and super-heated steam applications. The Ellipse flow meter is designed with a series of ports facing the upstream velocity pressures and flow sensing ports strategically located ahead of the trailing edge flow separation.

COMPONENTS

All sensors are furnished with 1/2 in. instrument gate valves, threaded cross tees, threaded weld fitting, threaded gate valve, threaded insert/retract mechanism w/rods, and ID tag as standard equipment. Available options include integral 3-valve or 5-valve transmitter mount manifold and integral RTD temperature sensor.

FEATURES

- Hot-tap model installs without system shutdown
- Single point pipe entry for DP, temperature and static pressure
- No dampening software required
- Low pressure loss (typically 3% of DP in a 12 in. (304 mm) line) due to the patented aerodynamic profile
- Optional NIST traceable calibration
- Accuracy: ±0.75% of reading, repeatability: ±0.1% of reading
- Turndown Ratio: 17:1; no vacuum effects
- No moving part construction provides long, trouble-free service life
- True static pressure measurement rather than a calculated value
- Overcomes loss of accuracy caused by fluid separation at the sensor body

CONFIGURATION

The flow element has a two-piece construction: an elliptical shape and two 100% independent flow sensing chambers. This construction prevents signal degradation and mixing, and does not require dampening hardware or software. The impact velocity sensing holes (high pressure) are located along the leading edge and the true static sensing holes (low pressure) are on the exterior probe side. This does not generate any vortices or vacuum effects that impinge on the static pressure measurement sensing area and has a drag coefficient of 0.32 or less. Each flow sensor is complete with instrument shutoff valves or optional integral manifold valve for direct transmitter mount. An identification tag is supplied with specific flow station measurement information, as required.

MAXIMUM ALLOWABLE DP (INCHES OF WATER COLUMN)

Pipe Size	Single Support Probe Size (in.)		Double Support Probe Size (in.)	
	7/8	1-1/4	7/8	1-1/4
2 in. (50.80 mm)	880	—	2380	—
2-1/2 in. (63.50 mm)	525	—	1558	—
3 in. (76.20 mm)	396	—	1283	—
3-1/2 in. (88.90 mm)	283	—	1117	—
4 in. (101.60 mm)	197	—	980	—
5 in. (127.00 mm)	153	—	757	—
6 in. (152.40 mm)	126	—	669	—
8 in. (203.20 mm)	114	360	512	—
10 in. (254.80 mm)	100	240	315	960
12 in. (304.80 mm)	87	175	250	700
14 in. (355.60 mm)	53	147	195	585
16 in. (406.40 mm)	—	113	—	450
18 in. (457.20 mm)	—	90	—	360
20 in. (508.00 mm)	—	74	—	295
24 in. (609.60 mm)	—	68	—	270

Badger Meter

PTT-DS-00783-EN-05 (August 2021)

Product Data Sheet

SPECIFICATIONS

Applications	Saturated and super-heated steam
Pipe Size	2…24 in. (50…610 mm)
Pressure	800 PSI (5515 kPa) max. Consult factory for higher pressure
Temperature	800° F (426° C) max. Consult factory for higher temperature
Accuracy	±0.75% of reading
Repeatability	±0.1%
Turndown Ratio	17:1 with no vacuum effect
Reynolds Number	>75,000: Maintains most accurate flow measurements <75,000: Consult factory for estimated results
Resonance	Less than 0.8 but greater than 1.2. If greater than 0.8, use double support. System shutdown is required when the double support option is used. Select larger diameter Ellipse to avoid double support.

STANDARD COMPONENTS

Component	**Specifications**
Head	T-type
Connection	316 SS 1/4 in. or 1/2 in. FNPT
Fitting	CS 3000 lb. weld – ASTM A105
Ellipse Sensor	316/316L SS
Instrument Valves	2 per sensor, CS 1/4 in. or 1/2 in.
Sensor Flange	150 lbs 316/316L SS
Packing Chamber	CS with molythane or graphite packing gland
Packing Chamber Flange	CS 150 lbs with SS cap
Isolation Ball Valve	316-SS, NPT threaded
Nuts and Bolts	CS threaded
Nipples	CS, schedule 40
ID Tag	316 SS with wire

DIMENSIONS

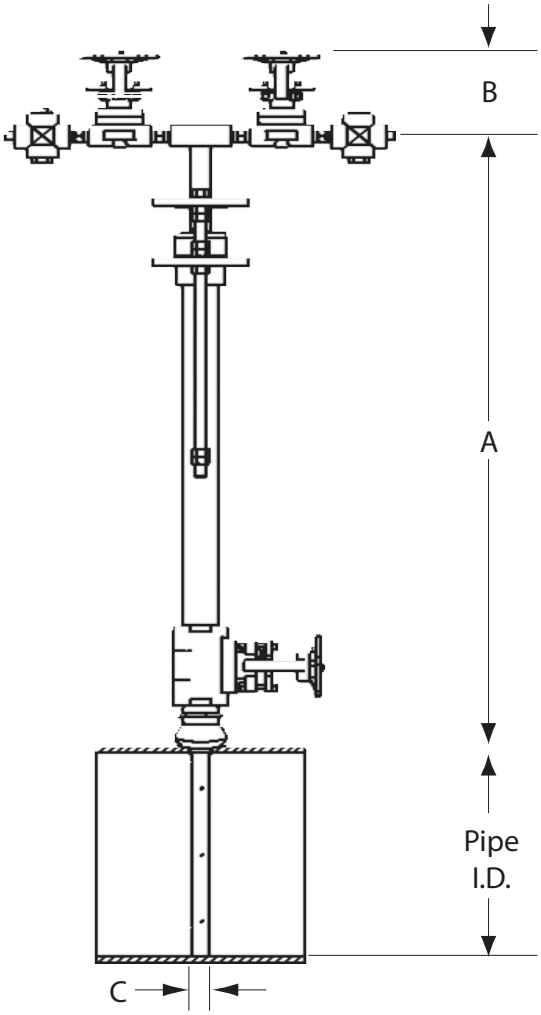

Schedule	AHS "A" Dimensions			AHS1 "A" Dimensions			Probe Width "C"	
	Pipe Size in. (mm)	Inserted in. (mm)	Retracted in. (mm)	Pipe Size in. (mm)	Inserted in. (mm)	Retracted in. (mm)	Model	C in. (mm)
Standard Schedule	2 (50.80)	29.5 (749.30)	38.5 (977.90)	12 (304.80)	42.125 (1069.98)	61.75 (1568.45)	AHS	0.875 (22.225)
	2-1/2 (63.50)	30 (762.00)	39.5 (1003.30)	14 (355.60)	44.125 (1120.78)	65 (1651.00)	AHS1	1.25 (31.750)
	3 (76.20)	30.5 (774.70)	40.5 (1028.70)	16 (406.40)	46.125 (1171.58)	69 (1752.60)	—	—
	3-1/2 (88.90)	31 (787.40)	41.5 (1054.10)	18 (457.20)	48.125 (1222.38)	73 (1854.20)	—	—
	4 (101.60)	31.5 (800.10)	42.5 (1079.50)	20 (508.00)	50.125 (1273.18)	77 (1955.80)	—	—
	5 (127.00)	32.5 (825.50)	44.5 (1130.30)	24 (609.60)	54.125 (1374.78)	85 (2159.00)	—	—
	6 (152.40)	33.375 (847.725)	46.5 (1181.10)	—	—	—	—	—
	8 (203.20)	35.375 (898.525)	50.5 (1282.70)	—	—	—	—	—
	10 (254.80)	37.375 (949.325)	54.5 (1384.30)	—	—	—	—	—
	12 (304.80)	39.375 (1000.13)	58.5 (1485.90)	—	—	—	—	—
	14 (355.60)	41.375 (1050.93)	61.75 (1568.45)	—	—	—	—	—

PART NUMBER CONSTRUCTION

Ellipse®
Annular Threaded Hot-tap Steam
7/8 in. DIAMETER

PAHS - [ ][ ][ ][ ][ ][ ][ ][ ][ ][ ]

PIPE SIZE	
2 in.	A
2-1/2 in.	B
3 in.	C
3-1/2 in.	D
4 in.	E
5 in.	F
6 in.	G
8 in.	H
10 in.	I
12 in.	J
14 in.	K
SCHEDULE	
STD	A
20	B
30	C
40	D
60	E
80	F
100	G
120	H
140	I
160	J
XH	K
XXH	L
5S	M
10S	N
40S	O
80S	P
PIPE ORIENTATION	
Horizontal	A
Vertical	B
PROBE MATERIAL	
316/316L SS	1
Monel®	2
Inconel®	3
Hastelloy®	4
Other	X
INSTRUMENT CONNECTION	
1/2 in. NPT	A
1/2 in. Socket	B
TT3 (Integral 3-Valve Trans Mount - Max Temp 225° F)	C
TT5 (Integral 5-Valve Trans Mount - Max Temp 225° F)	D
(RTD is not available with Integral 5-Valve Manifold. If RTD is required, select "E" Transmitter Flange Connection and the appropriate manifold valve under the Instrument Valve section below.)	
Transmitter Flange Connection	E
INSERTION MECHANISM / ISOLATION BALL VALVE	
CS Cage Nipple & Rods	A
SS Cage Nipple & Rods	D
CS Gear Drive, Cage Nipple & Rods	G
SS Gear Drive, Cage Nipple & Rods	J
NOTE: SS Gear Drive - SS for Housing and Wetted Parts Only	
Other	X
PACKING MATERIAL	
EPDM (-65…300° F, 400° F in steam)	1
Viton®/Fluorocarbon (-20…400° F)	2
Graphoil (1200° F)	3
Fluoromyte (-65…300° F)	4
Other	X
PIPE MOUNTING*	
A105 CS 3000#	1
316/316L SS 3000#	2
Supplied Seperately by Preso	3
Not Required	Z
INSTRUMENT VALVE	
1/2 in. Gate CS w/Cross	A
1/2 in. Gate SS w/Cross	B
Not Required	Z
ONLY AVAILABLE WITH OPTION "E" UNDER INSTRUMENT CONNECTION	
Flg x Flg 3-Valve Manifold CS - Max Temp 225° F	E
Flg x Flg 3-Valve Manifold SS - Max Temp 225° F	F
Flg x Flg 5-Valve Manifold CS - Max Temp 225° F	G
Flg x Flg 5-Valve Manifold SS - Max Temp 225° F	H
Customer Supplied Valve Manifold	I
RTD (Max Temp 480° F, consult factory for higher temp options)	
100 Ohm RTD 3-Wire w/Explosion Proof Head	1
100 Ohm RTD 3-Wire, Integral w/Aluminum Head	2
Not Required	Z

Stainless Steel ID Tag supplied as standard.
Tag information must be included with order.

NOTE: Make sure that DP and Resonance are withing acceptable limits. (See chart in the Ellipse Brochure)
*Double Supports are not recommended for Hot Tap / Wet Tap models.

Ellipse®
Annular Threaded Hot Tap Steam
1-1/4 in. DIAMETER

PAHS1 - [ ][ ][ ][ ][ ][ ][ ][ ][ ][ ]

PIPE SIZE

14 in.	K
16 in.	L
18 in.	M
20 in.	N
24 in.	O

SCHEDULE

STD	A
20	B
30	C
40	D
60	E
80	F
100	G
120	H
140	I
160	J
XH	K
XXH	L
5S	M
10S	N
40S	O
80S	P

PIPE ORIENTATION

Horizontal	A
Vertical	B

PROBE MATERIAL

316/316L SS	1
Monel®	2
Inconel®	3
Hastelloy®	4
Other	X

INSTRUMENT CONNECTION

1/2 in. NPT	A
1/2 in. Socket	B
TT3 (Integral 3-Valve Trans Mount - Max Temp 225° F)	C
TT5 (Integral 5-Valve Trans Mount - Max Temp 225° F)	D
(RTD is not available with Integral 5-Valve Manifold. If RTD is required, select "E" Transmitter Flange Connection and the appropriate manifold valve under the Instrument Valve section below.)	
Transmitter Flange Connection	E

INSERTION MECHANISM / ISOLATION BALL VALVE

CS Cage Nipple & Rods	A
SS Cage Nipple & Rods	B
CS Gear Drive, Cage Nipple & Rods	C
SS Gear Drive, Cage Nipple & Rods	D
NOTE: SS Gear Drive - SS for Housing and Wetted Parts Only	
Other	X

PACKING MATERIAL

EPDM (-65…300° F, 400° F in steam)	1
Viton®/Fluorocarbon (-20…400° F)	2
Graphoil (1200° F)	3
Fluoromyte (-65…300° F)	4
Other	X

PIPE MOUNTING*

A105 CS 3000#	1
316/316L SS 3000#	2
Supplied Seperately by Preso	3
Not Required	Z

INSTRUMENT VALVE

1/2 in. Gate CS w/Cross	A
1/2 in. Gate SS w/Cross	B
Not Required	Z
ONLY AVAILABLE WITH OPTION "E" UNDER INSTRUMENT CONNECTION	
Flg x Flg 3-Valve Manifold CS - Max Temp 225° F	E
Flg x Flg 3-Valve Manifold SS - Max Temp 225° F	F
Flg x Flg 5-Valve Manifold CS - Max Temp 225° F	G
Flg x Flg 5-Valve Manifold SS - Max Temp 225° F	H
Customer Supplied Valve Manifold	I

RTD (Max Temp 480° F, consult factory for higher temp options)

100 Ohm RTD 3-Wire w/Explosion Proof Head	1
100 Ohm RTD 3-Wire, Integral w/Aluminum Head	2
Not Required	Z

Stainless Steel ID Tag supplied as standard.
Tag information must be included with order.

NOTE: Make sure that DP and Resonance are withing acceptable limits. (See chart in the Ellipse Brochure)
*Double Supports are not recommended for Hot Tap / Wet Tap models.

INTENTIONAL BLANK PAGE

INTENTIONAL BLANK PAGE

Control. Manage. Optimize.

Preso and Ellipse are registered trademarks of Badger Meter, Inc. Other trademarks appearing in this document are the property of their respective entities. Due to continuous research, product improvements and enhancements, Badger Meter reserves the right to change product or system specifications without notice, except to the extent an outstanding contractual obligation exists. © 2021 Badger Meter, Inc. All rights reserved.

www.badgermeter.com