A Badger Meter® Brand

Water Quality Monitor

Model Q45H/85 Portable Peracetic Acid Measurement System

Badger Meter

ATI-UM-04458-EN-02 (September 2024)

User Manual

CONTENTS

Introduction 5
General 5
Standard System 5
Features 5
Q45/85 System Specifications. 6
Q45H Performance Specifications 6
Analyzer Mounting 7
General 7
Portable Handle 7
Sensor/Flowcell Mounting 8
General 8
Constant-Head Flowcell 8
Sealed Flowcell 9
Submersion Mounting 10
Electrical Installation 11
General 11
Direct Sensor Connection 11
Sensor Assembly 13
PAA Sensor Preparation. 13
Operation 15
User Interface 15
Battery/Power Circuit Board 15
Battery Power Circuit Board 16
Voltage Outputs 16
User Interface 17
Keys 17
Display. 18
Software 19
Software Navigation 19
Measure Menu [MEASURE] 21
Calibration Menu [CAL] 21
Configuration Menu [CONFIG] 22
Control Menu [CONTROL]. 23
Diagnostics Menu [DIAG] 23

Calibration 25
PAA Calibration 25
PAA Zero Cal 25
PAA Span Cal 26
Temperature Calibration 27
System Maintenance 28
General 28
Analyzer Maintenance 28
Sensor Maintenance. 28
Sensor Acid Cleaning 29
Flowcell Maintenance. 29
Troubleshooting 30
General 30
External Sources of Problems 30
Analyzer Tests 30
Display Messages 31
Sensor Tests 32
Spare Parts 33

INTRODUCTION

General

The Model Q45H/85 is a versatile portable monitoring/recording system designed for the measurement of Peracetic Acid (PAA) in solution. The display range of the system is user selectable for 0…20.00 ppm, 0…200.0 ppm or 0…2000 ppm and the sensing system operates on water streams with temperatures from 0…55° C.

NOTE: The monitor does show ranges of 0…200 ppb and 0…2 ppm, but these ranges should not be used as system is not sensitive enough to use these display ranges.

The system operates on two AA batteries, and runs continuously for approximately 240 hours.

⚠ WARNING

IF UNIT IS TO BE STORED FOR MORE THAN 6 MONTHS, REMOVE THE BATTERIES FROM THE HOLDER TO AVOID POTENTIAL DAMAGE FROM BATTERY LEAKAGE.

The basic sensing element used in the Peracetic Acid monitor is a polarographic membrane sensor that measures peracetic acid directly. Water simply flows past the sensor and directly to drain, with the flow rate and pressure across the sensor controlled by a constant-head flowcell assembly. The measurement does not alter the sample or add any chemicals to the sample stream, so the water flow can return to the system if desired.

Standard System

The standard model Q45/85 system includes three main components: the Q45 analyzer, a constant-head flowcell and a peracetic acid sensor. A sealed flowcell is available for applications where sample flowrate and pressure can be carefully controlled. A submersible sensor is also available, but cannot be used in static samples as it requires at least 0.3 ft/s flow velocity across the membrane.

For connection of the sensor to the electronics, a 25 ft cable is supplied. All required spare parts are also provided with the basic system, including spare membranes, electrolyte, O-rings and any special hardware.

Features

- Standard main module is designed to be a fully isolated, battery powered instrument for monitoring/recording applications. Can be quickly converted to either a loop power transmitter or line powered analyzer (optional board required for analyzer.)
- High accuracy, high sensitivity system, measures from 1 ppm…2000 ppm through 4 internal automatic ranges. User ranges of 20.00 ppm, 200.0 ppm or 2000 ppm.
- Two 10-bit, isolated, 0…2.5V DC analog outputs may be configured to track PAA and temperature or PAA and PAA. Both analog outputs can be individually programmed to specific ranges.
- Large, high contrast, custom Super-Twist display provides excellent readability. The secondary line of display uses 5 × 7 dot matrix characters for clear message display. Two of four measured parameters may be on the display simultaneously. An LED backlight can be turned on if necessary for use in very low light conditions.
- Diagnostic messages provide a clear description of any problem with no confusing error codes to look up. Messages are also included for diagnosing calibration problems.
- Quick and easy one-point calibration method and sensor zero-cal. To provide high accuracy, all calibration methods include stability monitors that check temperature and main parameter stability before accepting data.
- High accuracy three-wire Pt100 temperature input. Temperature element can be user calibrated.
- Security lock feature to prevent unauthorized tampering with transmitter settings. All settings can be viewed while locked, but they cannot be changed.

Q45/85 System Specifications

Displayed Parameters	Main input, 1 ppm…2000 ppm Sensor temperature, –10.0…55.0° C (23…131° F) Sensor Current, 0.0…999.9 nA, 0.000…99.99 µA Loop current, 4.00…20.00 mA Sensor slope/offset Model number and software version PID Controller Status
Main Parameter Ranges	Manual selection of one of the following ranges: 0.0…20.00 ppm 0.00…200.0 ppm 0.00…2000 ppm
Display	0.75 in. (19.05 mm) high 4-digit main display with sign 12-digit secondary display, 0.30 in. (7.62 mm) 5 × 7 dot matrix. Integral LED back-light for visibility in the dark.
Keypad	4-key membrane type with tactile feedback, polycarbonate with UV coating
Weight	1.5 lb (0.68 kg)
Ambient Temperature	Analyzer Service, –20…60° C (–4…140° F) Sensor Service, –5…55° C (23…131° F) Storage, –5…70° C (–22…158° F)
Ambient Humidity	0…95%, non-condensing.
EMI/RFI Influence	Designed to EN 61326-1
Output Isolation	600V galvanic isolation
Filter	Adjustable 0…9.9 minutes additional damping to 90% step input
Temperature Input	Pt100 RTD with automatic compensation
Sensor	2-electrode polarographic membraned sensor for direct measurement of PAA
Sensor Materials	PVC and Kynar
Sensor Cable	25 ft (7.5 m) cable with 6-pin plug.
Flowcell	Constant-head overflow, clear cast acrylic, 7…30 GPH, 15 GPH recommended, inlet is 1/4 in. hose barb at 1/8 in. MNPT, outlet is 1/2 in. hose barb at 3/8 in. MNPT
Instrument Power	Two generic AA batteries, low battery indication at 1.60V DC. Lithium AA batteries are recommended for max performance.
Outputs	Two 0…2.5V DC isolated outputs are provided on for connection to data recorders and more
Battery Life	Approximately 240 hours of operational use on a set of batteries (without backlight).

Q45H Performance Specifications

Accuracy	1% of selected range or 1 ppm
Repeatability	0.5% of selected range or 1 ppm
Sensitivity	0.5% of selected range
Non-linearity	0.5% of selected range
Warm-Up Time	3 seconds to rated performance (electronics only)
Supply Voltage Effects	±0.05% span
Instrument Response Time	60 seconds to 90% of step input at lowest damping

ANALYZER MOUNTING

General

The Q45/85 Portable Peracetic Acid System comes complete with a specially designed handle that allows the system to be comfortably carried, or quickly strapped to a railing. Although the system is designed to be a portable system, it can be permanently mounted for longer term field use. This is possible due to the very long battery life spans that can be achieved with the system.

Portable Handle

A removable handle is included with each unit that provides not only comfortable transportation of the system, but the integral locking strap allows the system to be quickly mounted to pipes or rails for longer term use in one area.

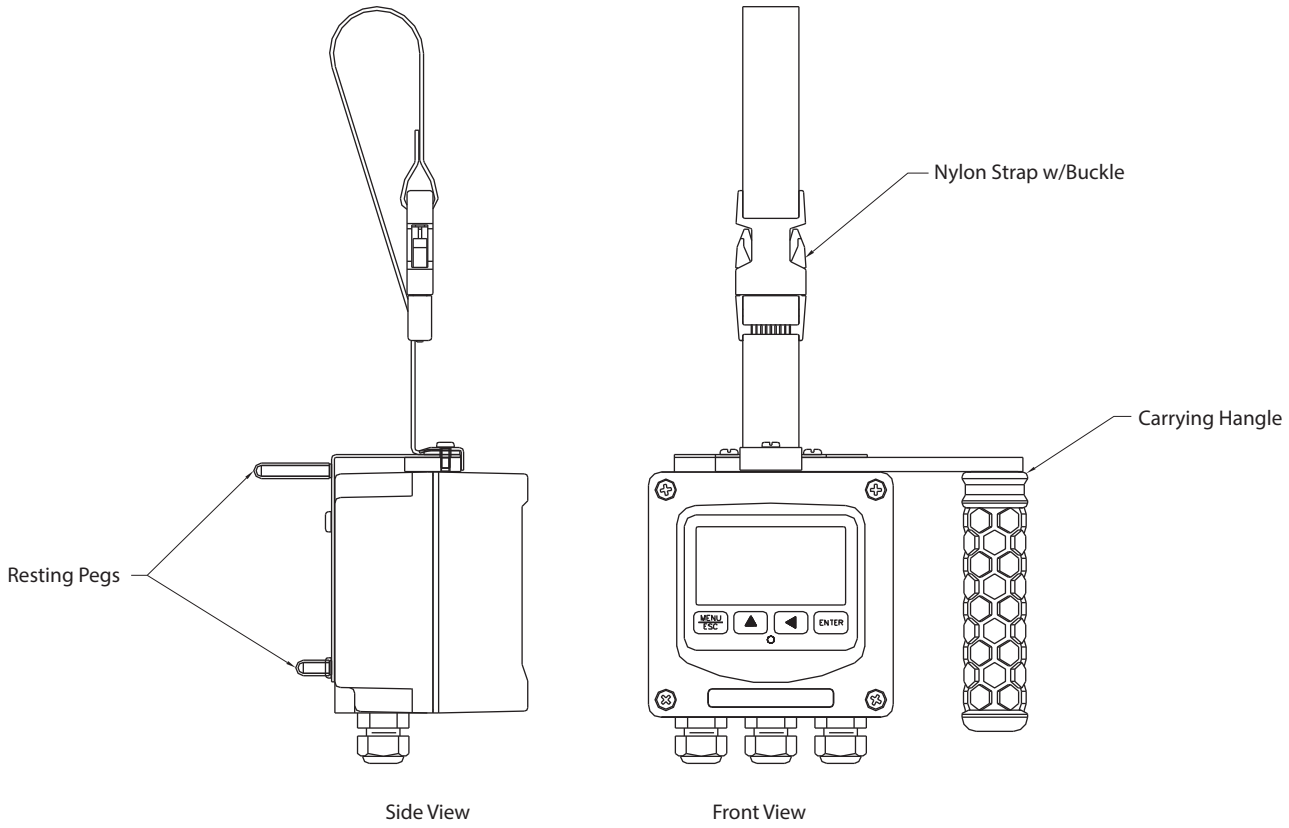

Figure 1: Portable handle views

SENSOR/FLOWCELL MOUNTING

General

Select a location within the maximum sensor cable length for mounting of the sensor flowcell.

Constant-Head Flowcell

Peracetic acid sensors are best used in a constant-head overflow chamber because variations in sample flow rate and pressure can cause unstable readings. When monitoring low concentrations (below 0.5 ppm), this method should always be used.

Mechanical installation of the flowcell requires that it be mounted to a wall or other convenient flat surface. Alternatively, the mounting holes on the plate accommodate a 2 in. U-bolt for mounting the plate to a 2 in. pipe. *Figure 2* shows the dimensions and mounting hole locations for the flowcell. Be sure to allow enough clearance on the left side of the flowcell for insertion and removal of the sensor. About 12 in. clearance is recommended.

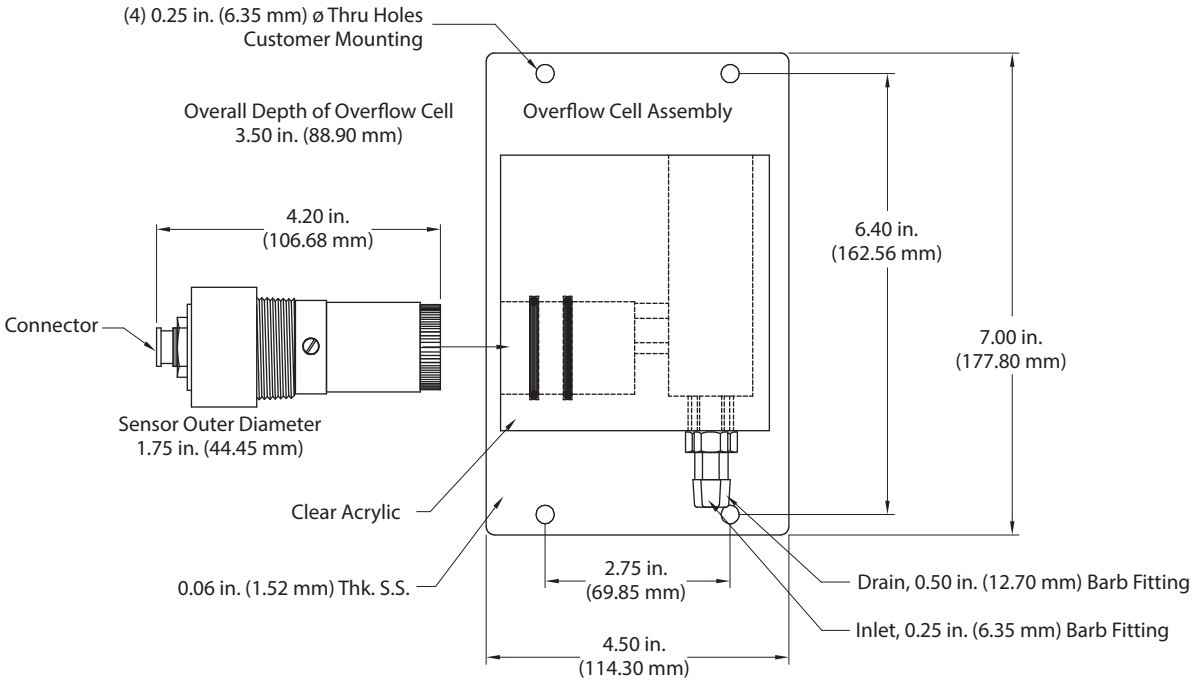

Figure 2: Constant-head flowcell details

Once mounted, inlet and drain connections must be made. The flowcell contains a 1/8 in. MNPT inlet connection and a 3/8 in. MNPT drain connection. Hose barbs for the inlet and drain connections are supplied with the flowcell for use with flexible tubing. The inlet hose barb is used with 1/4 in. I.D. tubing and the drain hose barb is used with 1/2 in. I.D. tubing.

Sealed Flowcell

Applications where the sample inlet flow is well controlled can use a simpler sealed flowcell. Using this flowcell requires that sample flow be controlled externally to about 400 cc/min. using pressure regulators and needle valves. Variable flow rate or variable pressure causes unstable readings in this flowcell. Badger Meter offers a special flow control element that can be used ahead of this flowcell on the incoming sample line. The flow control is part number (55-0048). It controls the inlet flowrate at 400 cc/min. with inlet pressure variations from 5…150 psig. A 50 micron y-strainer ahead of the flow control element is recommended.

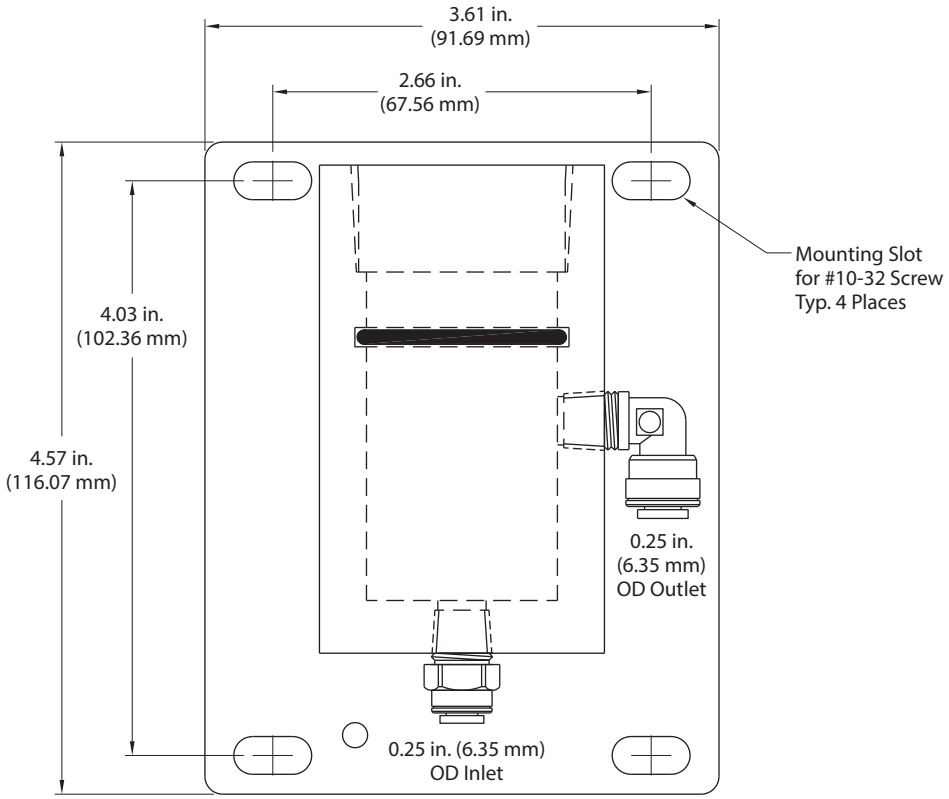

Figure 3: Sealed flowcell details

Submersion Mounting

Some applications are much easier done using the submersible sensor. This method can sometimes be used where flow is reasonably constant, and hydraulic head does not vary appreciably. PAA sensors can never be used in completely stagnant conditions. A flow velocity of at least 0.3 ft per second is normally required for measurement. Any applications for a submersible PAA sensor should first be discussed with Badger Meter. A trial of such installations may be necessary.

Submersible sensors are mounted to a 1 in. pipe using a standard 1 in. PVC thread by thread pipe coupling. The mounting pipe can be secured to standard 1-1/2 in. pipe rail using a mounting bracket kit available from Badger Meter (part number 00-0628) as shown in *Figure 4*.

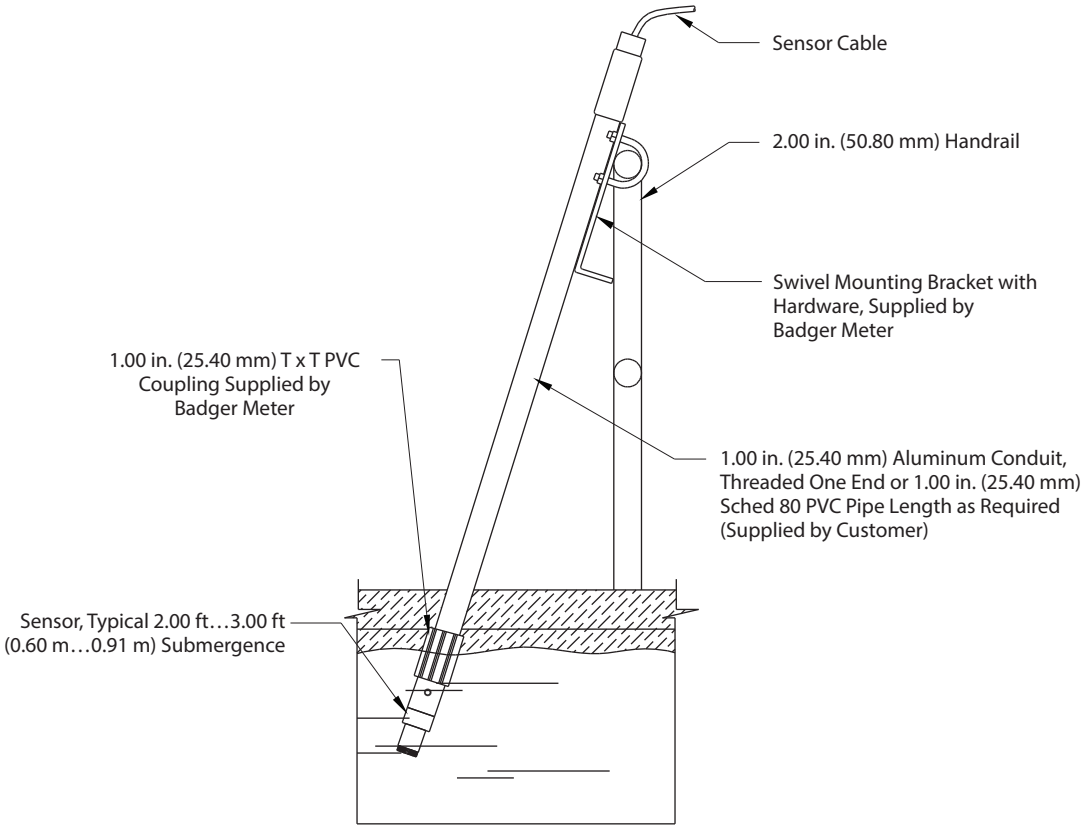

Figure 4: Submersion mounting

ELECTRICAL INSTALLATION

General

The sensor cable can be quickly connected to the Q45 terminal strip by matching the wire colors on the cable conductors.

Direct Sensor Connection

The sensor cable should be routed into the enclosure through the right hand cord grip on the bottom of the enclosure. Make sure the cord-grips are snugly tightened after electrical connections have been made to prevent moisture incursion. When stripping cables, leave adequate length for connections in the transmitter enclosure, as shown in *Figure 5*.

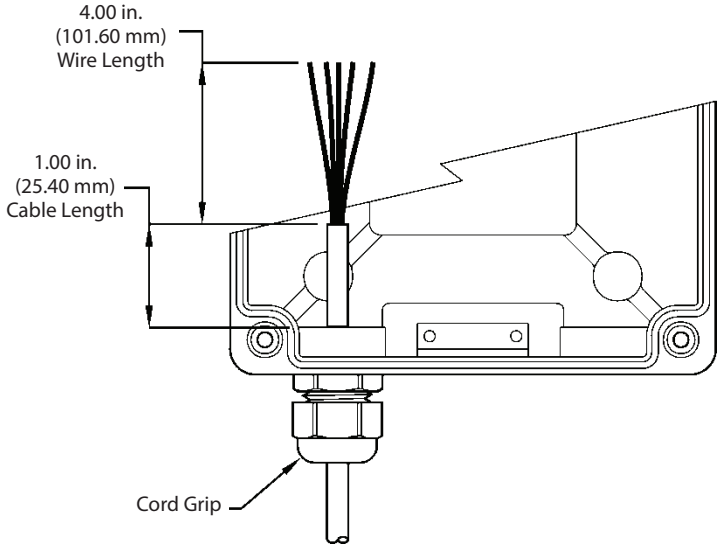

Figure 5: Sensor cable preparation

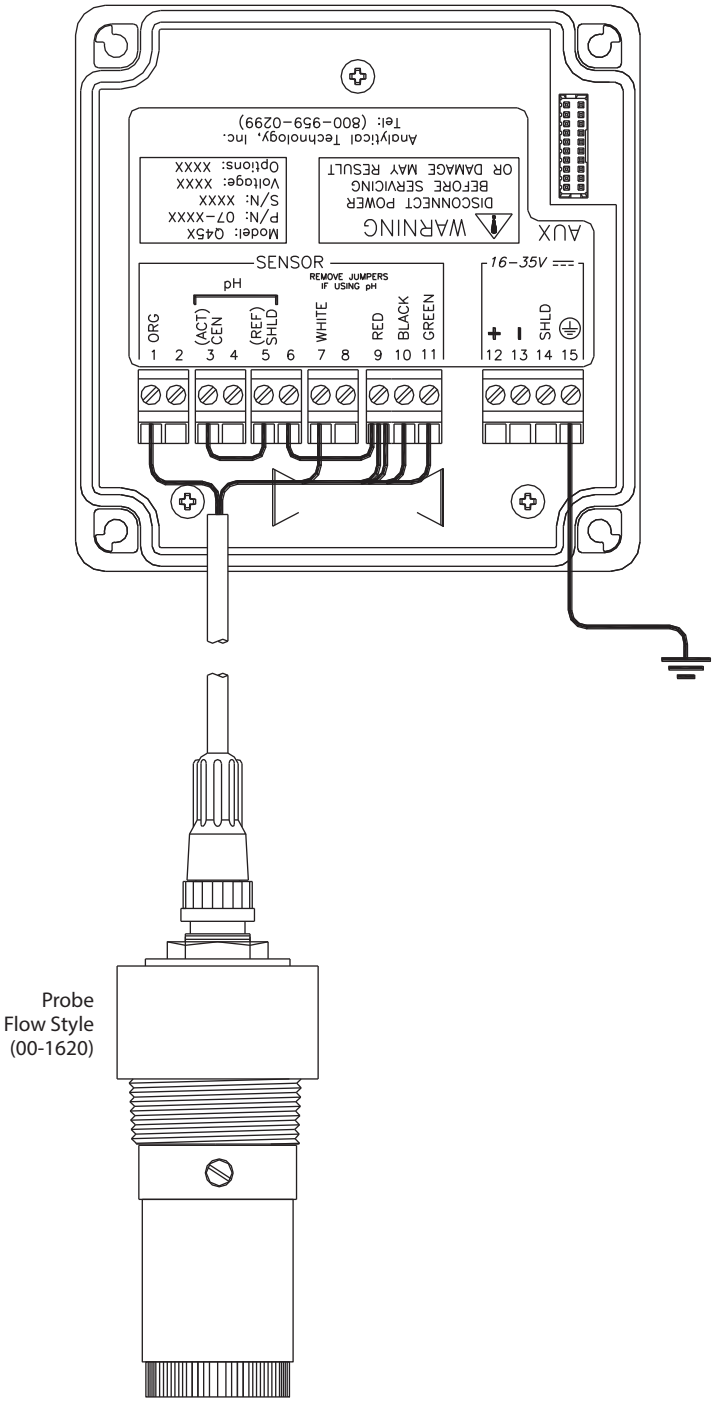

Figure 6: Sensor connection diagram

SENSOR ASSEMBLY

PAA Sensor Preparation

The PAA sensor supplied with the Q45 is shipped dry. It does not operate until it is prepared by adding electrolyte and a membrane. Preparation of the sensor for operation must be done carefully. The procedure should be done by a qualified technician, and it should only be done when the system is ready for operation. Until then, it is best to leave the sensor in the condition in which it is received.

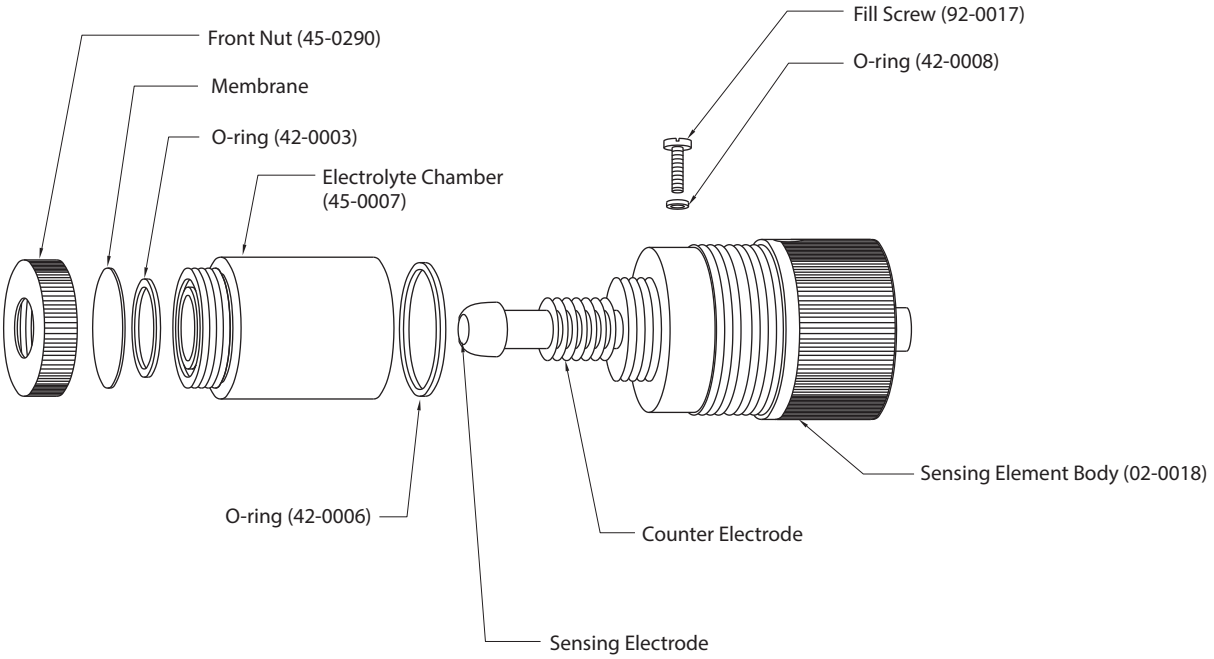

Figure 7: Peratic acid (PAA) sensor assembly

Submersible PAA sensors are made up of two separate parts, a submersion holder that also contains the temperature compensating element and a sensing module. The sensing module screws into the holder, with an O-ring providing a water tight connection.

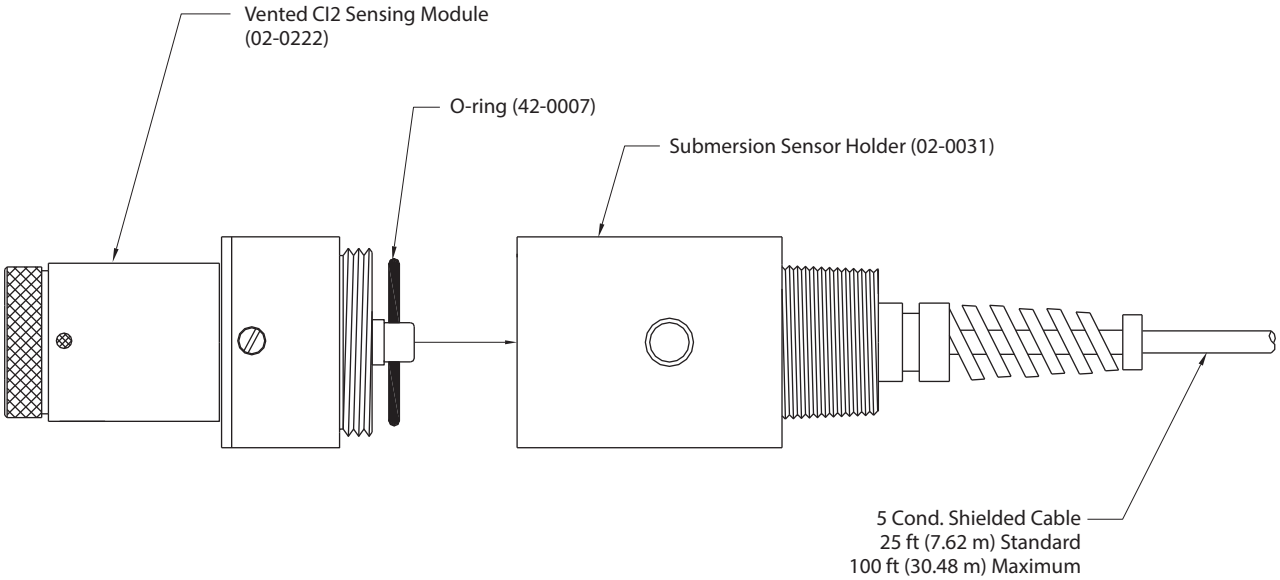

Figure 8: Submersible PAA sensor assembly

Follow the procedure below to prepare the PAA sensor for operation:

1. Unscrew the electrolyte chamber from the assembled sensor and also remove the fill screw (vent screw) from the side of the sensor body.
2. Remove the front nut from the bottom of the chamber and discard the protective membrane. O-rings are contained in grooves on both the bottom and top of the chamber. Be sure that these O-rings remain in place.
3. From the package of membranes supplied with the sensor, place a new membrane into the front nut. **The membrane is clear and is separated from other membranes by a light blue paper spacer.**
4. Screw the front nut on to the chamber until you feel the O-ring compress. Hand tight compression is all that is needed. Do not use tools to tighten. The membrane should be flat across the bottom of the chamber without wrinkles.
5. Fill the chamber with electrolyte until the level reaches the bottom of the internal threads.
6. Slowly screw the chamber onto the sensor body. A small amount of electrolyte runs out of the hole from which the vent screw was removed. Place a paper towel around the sensor to absorb the electrolyte overflow. The electrolyte is harmless and does not irritate skin. Tighten the chamber until the O-ring at the top of the chamber is compressed. Once again, do not use tools to tighten.
7. Shake excess electrolyte from the fill hole on the side of the sensor and replace the fill screw.

The sensor is now ready for operation. The membrane should be stretched tightly across the tip of the sensor.

⚠CAUTION

WHEN HANDLING THE ASSEMBLED SENSOR, DO NOT SET THE SENSOR ON ITS TIP OR DAMAGE TO THE MEMBRANE COULD RESULT. SEVERE IMPACTS ON THE TIP OF THE SENSOR FROM DROPPING OR OTHER MISUSE MAY CAUSE PERMANENT DAMAGE TO THE SENSOR.

OPERATION

User Interface

To turn the system ON, simply press and hold the **MENU** key for approximately 5 seconds and the display turns on. To turn unit off, press and hold the **ENTER** key until the display shuts off (about 3 seconds).

NOTE: The unit must be in the *MEASURE* menu in order for the 3-second key press to operate. The instrument turns off automatically after 30 minutes if no keys are pressed, optimizing battery life. This mode of operation is ideal for portable operation where intermediate readings are being taken. Assuming the instrument is used perhaps an hour per day, this would result in a battery lifespan of about 240 hours. For continuous operation with no automatic shut-off, turn the *Auto-OFF* feature to OFF in the *DIAG* menu. This mode is intended for use when the instrument outputs are used for transmitting data. In this mode, the instrument runs continuously until the battery reaches the shut-down level (1.6V).

NOTE: Rechargeable AA batteries reduce operational times dramatically, as they typically contain much less energy than standard batteries.

The PWR switch disconnects the AA batteries and is only used to disconnect the battery if the system is not to be used for a long period of time (> 3 months of storage). Otherwise, leave this switch in the ON position. The red dip switch is only for factory use.

The "B" flashes on the display next to the main measurement indication when the instrument requires battery replacement. If the battery is not replaced, eventually the unit may not turn on in the normal operating mode. Once the low battery condition is indicated, the instrument only stays powered for 10 minutes.

Battery/Power Circuit Board

PQ45H monitors are powered by internal AA alkaline batteries *Figure 9* shows this board assembly with batteries installed. The battery circuit board contains 3 switch assemblies as shown in the drawings.

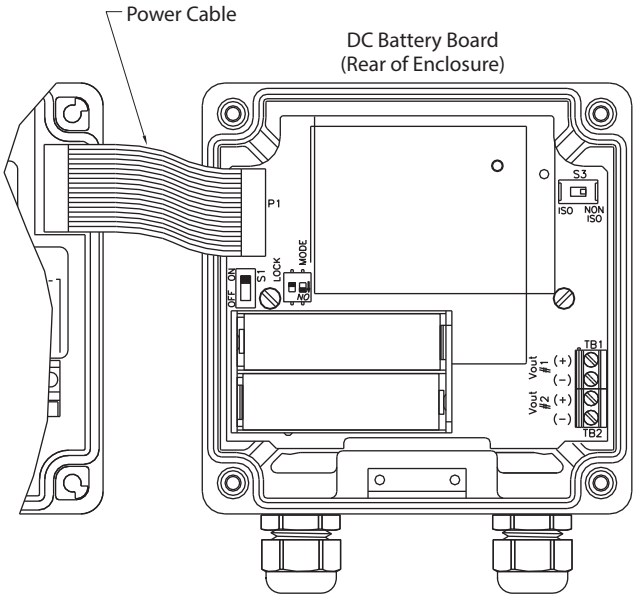

Figure 9: Battery board connection

The first **(S1)** is an On/Off slide switch. This switch must be in the ON position for operation. Turn it to OFF if you do not intend to operate the monitor in the next 30 days.

The second switch assembly **(S2)** contains two switches, the one on the left marked *LOCK* and the one on the right marked *MODE*. The function of these two slide switches are as follow:

- **LOCK**
  This switch is used to define how the monitor turns on and off. This switch is normally in the OFF position. With the lock switch off, the monitor turns on manually using the MENU key on the front of the monitor. With the lock switch in the ON position, the monitor is always on when there is enough power to run the monitor. The ON position is normally used when operating from an external power supply intended for continuous operation.
- **MODE**
  This switch is used to set the voltage at which monitor shuts off when powered by internal batteries. Alkaline batteries can normally be run down to about 0.8V. When using alkaline batteries, the mode switch is in the OFF position (factory default). If rechargeable NiMH batteries are substituted, place the *MODE* switch in the ON position.

  NOTE: Rechargeable NiMH batteries have only about 35% of the capacity of an alkalines. However, NiMH batteries can be recharged hundreds of times.

  The third switch assembly is a single slide switch **(S3)** which defines whether the 0…2.5V DC signals from the monitor are isolated or non-isolated. Output isolation is not required when outputs are connected to the internal data logger. However, if the outputs are connected to external devices through the external connection cable, putting this switch in the ISO position protects against possible ground loops. The isolation circuit slightly increases the power requirement for the monitor, resulting in a bit less battery life.

Battery Power Circuit Board

The Q45 portable instrument is primarily operated by software settings. However, there are also a few hardware details on the battery circuit board to note.

The battery board is a circuit board that sits in the rear of the Q45 enclosure, and connects to the Q45 AUX port through a ribbon cable. The battery board contains the battery clip for the two AA batteries and the output terminal strip for the two 0…2.5V DC outputs. Along the left side below the ribbon cable is an ON/OFF slide switch. This switch can be used to turn the instrument completely OFF when not intending to use the unit for an extended period.

Voltage Outputs

There are two sets of analog voltage outputs on the battery board that may be used to send isolated data back to remotely located recorders, PLCs and more. Output #1 is used only for PAA information, and Output #2 can be used for an additional PAA output channel, or it can be selected to output temperature information.

NOTE: Do not attempt to connect external DC or AC power supplies to the portable unit, or severe damage could result.

User Interface

The user interface for the Q45 Series instrument consists of a custom display and a membrane keypad. All functions are accessed from this user interface (no internal jumpers or pots, for example).

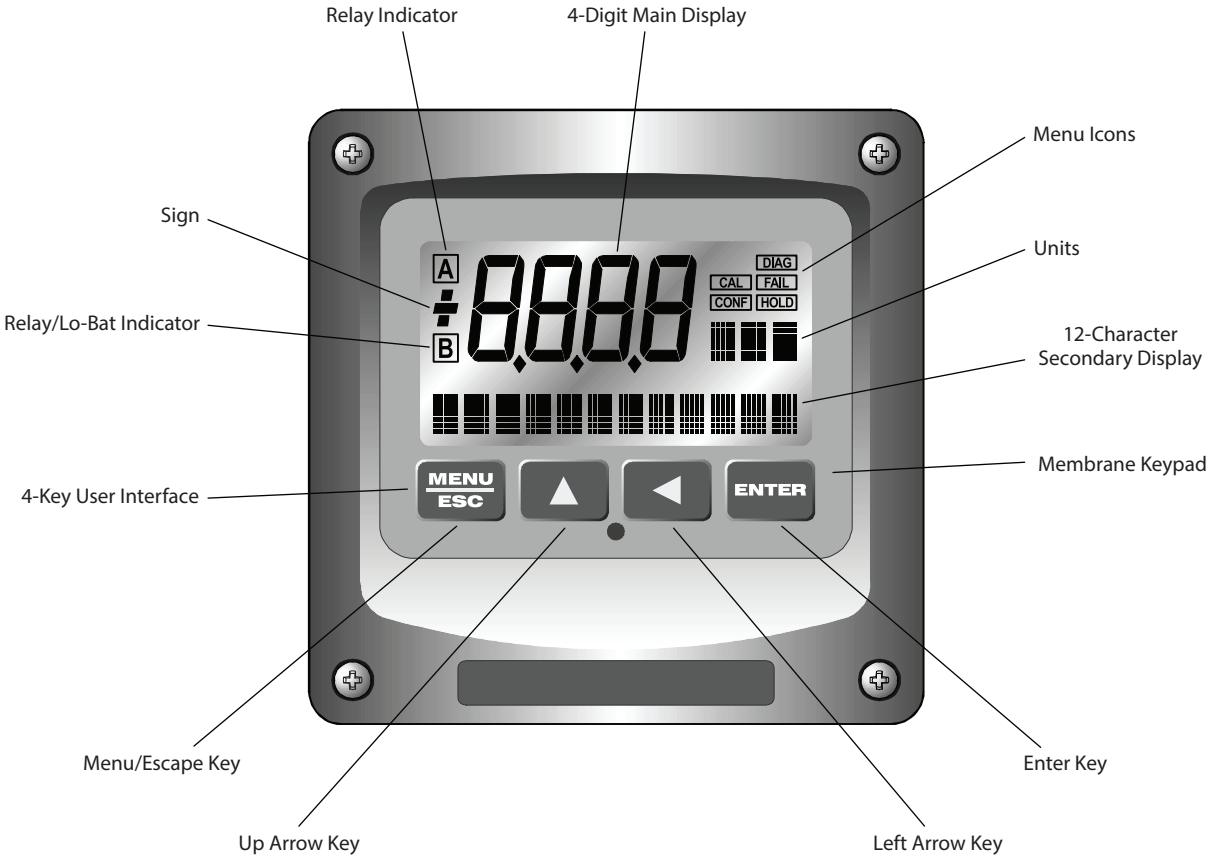

Figure 10: User interface

Keys

All user configurations occur through the use of four membrane keys. These keys are used as follows:

MENU/ESC	To scroll through the menu section headers or to escape from anywhere in software. The escape sequence allows the user to back out of any changes in a logical manner. Using the escape key aborts all changes to the current screen and backs the user out one level in the software tree. The manual refers to this key as either MENU or ESC, depending upon its particular function. In the battery-powered version of the Q45, this is also the ON button.
UP (arrow)	To scroll through individual list or display items and to change number values.
LEFT (arrow)	To move the cursor from right to left during changes to a number value.
ENTER	To select a menu section or list item for change and to store any change.

Display

The large custom display provides clear information for general measurement use and user configuration. There are three main areas of the display: the main parameter display, the secondary message line and the icon area.

Main Parameter

During normal operation, the main parameter display indicates the present process input with sign and units. This main display may be configured to display any of the main measurements that the system provides. During configuration, this area displays other useful setup information to the user.

Lower Line

During normal operation, the lower line of the display indicates user-selected secondary measurements that the system is making. This also includes calibration data from the last calibration sequence and the transmitter model number and software version. During configuration, the lower line displays menu items and set-up prompts to the user. Finally, the lower line displays error messages when necessary. For a description of all display messages, see *"Display Messages" on page 31*.

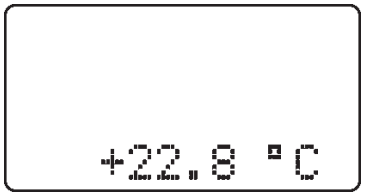

Icon Area

The icon area contains display icons that assist the user in set-up and indicate important states of system functions. The *CAL*, *CONFIG* and *DIAG* icons are used to tell the user what branch of the software tree the user is in while scrolling through the menu items. This improves software map navigation dramatically. Upon entry into a menu, the title is displayed (such as *CAL*) and then the title disappears to make way for the actual menu item. However, the icon stays on.

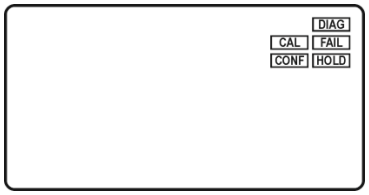

HOLD

The *HOLD* icon indicates that the current output of the transmitter has been put into output hold. In this case, the output is locked to the last input value measured when the *HOLD* function was entered. *HOLD* values are retained even if the unit power is cycled.

FAIL

The *FAIL* icon indicates that the system diagnostic function has detected a problem that requires immediate attention. This icon is automatically cleared once the problem has been resolved.

Icon B

The left screen area contains one "B" icon that indicates that the battery voltage is at a low level.

Software

The software of the Q45H is organized in an easy to follow menu-based system. All user settings are organized under five menu sections: *Measure, Calibration [CAL], Configuration [CONFIG], Control [CONTROL]* and *Diagnostics [DIAG]*.

NOTE: The default *Measure* menu is display-only and has no menu icon.

Software Navigation

Within the *CAL, CONFIG, CONTROL* and *DIAG* menu sections is a list of selectable items. Once a menu section (such as *CONFIG*) has been selected with the MENU key, the user can access the item list in this section by pressing either the **ENTER** key or the **UP** arrow key. The list items can then be scrolled through using the **UP** arrow key. Once the last item is reached, the list wraps around and the first list item is shown again. The items in the menu sections are organized such that more frequently used functions are first, while more permanent function settings are later in the list. See *Figure 11 on page 20* for a visual description of the software.

Each list item allows a change to a stored system variable. List items are designed in one of two forms: simple single variable, or multiple variable sequences. In the single variable format, the user can quickly modify one parameter. For example, changing temperature display units from °F to °C. In the multiple variable sequences, variables are changed as the result of some process. For example, calibration generally requires more than one piece of information to be entered. The majority of the menu items in the software consist of the single variable format type.

Any data that may be changed flashes. This flashing indicates *User Entry* mode and is initiated by pressing the **ENTER** key. The **UP** arrow key increases a flashing digit from 0…9. The **LEFT** arrow key moves the flashing digit from right to left. Once the change has been completed, pressing **ENTER** again stores the variable and stops the flashing. Pressing **ESC** aborts the change and also exits *User Entry* mode.

The starting (default) screen is always the *Measure* menu. The **UP** arrow key is used to select the desired display. From anywhere in this section the user can press the **MENU** key to select one of the four menu sections.

The UP arrow icon next to all list items on the display is a reminder to scroll through the list using the **UP** arrow key.

To select a list item for modification, first select the proper menu with the **MENU** key. Scroll to the list item with the **UP** arrow key and then press the **ENTER** key. This tells the system that the user wishes to perform a change on that item. For single item type screens, once the user presses the **ENTER** key, part or all of the variable begins to flash, indicating that the user may modify that variable using the arrow keys. However, if the instrument is locked, the transmitter displays the message "Locked!" and does not enter *User Entry* mode. The instrument must be unlocked by entering the proper code value to allow authorized changes to user entered values. Once the variable has been reset, pressing the **ENTER** key again causes the change to be stored and the flashing to stop. The message "Accepted!" displays if the change is within pre-defined variable limits. If the user decides not to modify the value after it has already been partially changed, pressing the **ESC** key aborts the modification and returns the entry to its original stored value.

In a menu item that is a multiple variable sequence type, once the **ENTER** key is pressed there may be several prompts and sequences that are run to complete the modification. The **ESC** key can always be used to abort the sequence without changing any stored variables.

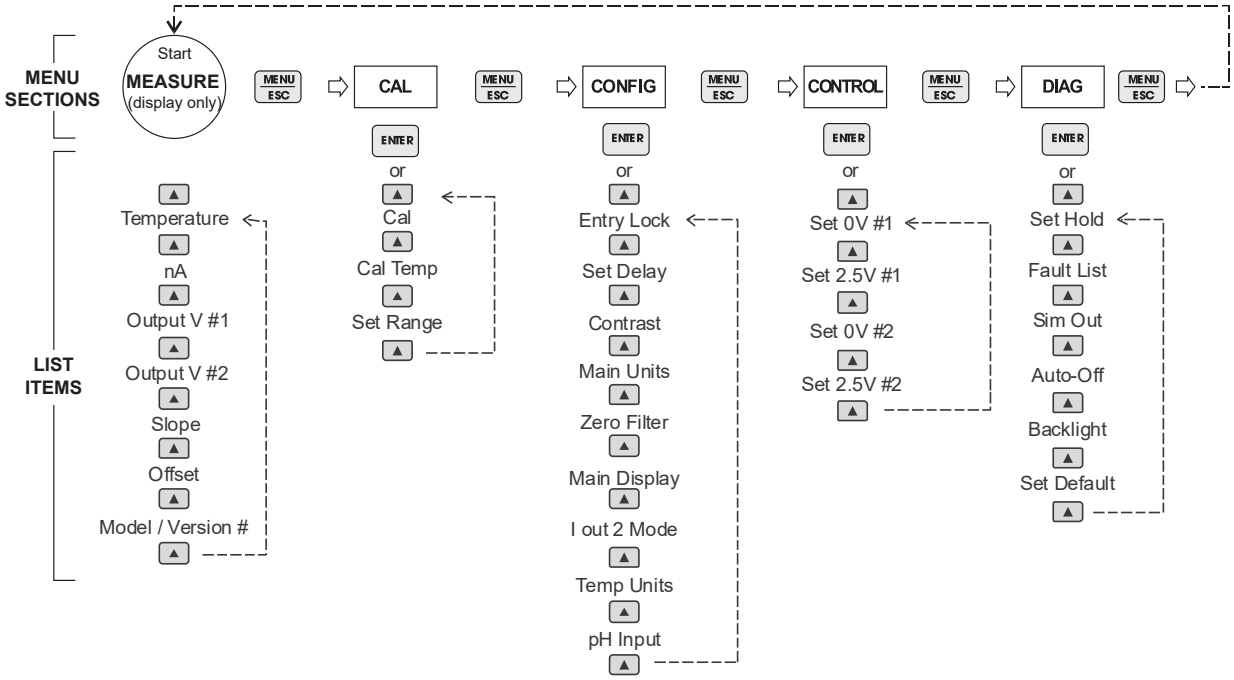

Figure 11: Software map

Measure Menu [MEASURE]

The default menu for the system is the display-only menu *MEASURE*. This menu is a display-only measurement menu and has no changeable list items. When left alone, the instrument automatically returns to this menu after approximately 30 minutes. While in the default menu, the UP arrow allows the user to scroll through the secondary variables on the lower line of the display. A brief description of the fields in the basic transmitter version is as follows:

Transmitter Measure Screens

25.7° C	Temperature display. Can be displayed in °C or °F, depending on user selection. A small "m" on the left side of the screen indicates the transmitter has automatically jumped to a manual 25° C setting due to a failure with the temperature signal input.
32.0 nA	Raw sensor current. Useful for diagnosing problems.
#1 1.05V DC	Instrument output signal #1.
#2 0.66V DC	Instrument output signal #2.
Slope = 100%	Sensor output response vs. ideal calibration. This value updates after each calibration. As the sensor ages, the slope reading decays indicating sensor aging. Useful for resolving sensor problems.
Offset = 0.0 nA	Sensor output current at a zero ppm input. This value updates after a zero-calibration has been performed. Useful for resolving sensor problems.
Q45H0 v4.02	Transmitter software version number.

The *MEASURE* screens are intended to be used as a very quick means of looking up critical values during operation or troubleshooting.

NOTE: A display test (all segments ON) can be actuated by pressing and holding the **ENTER** key while viewing the model/version number on the lower line of the display.

Calibration Menu [CAL]

The *Calibration* menu contains items for frequent calibration of user parameters. There are four items in this list: *Cal PAA, Cal Temp, Set Range* and *Cal Zero*.

Cal PAA	The PAA calibration function allows the user to adjust the transmitter span reading to match a reference solution, or to set the sensor zero point. See *"Calibration" on page 25* for more details.
Cal Temp	The temperature calibration function allows the user to adjust the offset of the temperature response by a small factor of ±5° C. The temperature input is factory calibrated to very high accuracy. Therefore, this feature is provided as an adjustment. See *"Calibration" on page 25* for more details.
Set Range	This function allows the user to set the display range of the transmitter to a specific application. Once set, all output functions use this display range to establish configuration settings. Press **ENTER** to initiate *User Entry* mode, and the value flashes. Use the arrow keys to modify value; available ranges include 200.0 ppb, 2.000 ppm, 20.00 ppm and 200.0 ppm. Press **ENTER** to store the new value. The display range does not affect the internal auto ranging scaler that, therefore, sensitivity is to specification in any user selected range.

Configuration Menu [CONFIG]

The *Configuration* menu contains all of the general user settings:

Entry Lock This function allows the user to lock out unauthorized tampering with instrument settings. All settings may be viewed while the instrument is locked, but they cannot be modified. The *Entry Lock* feature is a toggle-type setting; that is, entering the correct code locks the transmitter and entering the correct code again unlocks it. The code is preset at a fixed value. Press **ENTER** to initiate *User Entry* mode and the first digit flashes. Use arrow keys to modify value. See *page 33* for the Q45/85 lock/unlock code. Press **ENTER** to toggle lock setting once code is correct. Incorrect codes do not change state of lock condition.

Set Delay The delay function sets the amount of damping on the instrument. This function allows the user to apply a first order time delay function to the PAA measurements being made. Both the display and the output value are affected by the degree of damping. Functions such as calibration are not affected by this parameter. The calibration routines contain their own filtering and stability monitoring functions to minimize the calibration timing. Press **ENTER** to initiate *User Entry* mode, and the value flashes. Use the arrow keys to modify value; range is 0.1…9.9 minutes. Press **ENTER** to store the new value.

Contrast This function sets the contrast level for the display. The custom display is designed with a wide temperature range, Super-Twist Nematic (STN) fluid.

The STN display provides the highest possible contrast and widest viewing angle under all conditions. Contrast control of this type of display is generally not necessary, so contrast control is provided as a means for possible adjustment due to aging at extreme ranges. In addition, the display has an automatic temperature compensation network. Press **ENTER** to initiate *User Entry* mode, and the value flashes. Use arrow keys to modify the value; range is 0…8 (0 being lightest). Press **ENTER** to update and store the new value.

Main Units This function allows the user to select either ppm or mg/l for the peracetic acid measurement.

Zero Filter This function forces the reading to zero when reading is below the entered value. For example, if the entered value were 0.0020 the display at 0…0019 would indicate 0.000. This feature is useful in blanking out zero noise.

Main Display This function allows the user to change the measurement in the primary display area. The user may select between PAA, sensor temperature or output current. Using this function, the user may choose to put temperature in the main display area and the PAA measurement on the secondary, lower line of the display. Press **ENTER** to initiate *User Entry* mode, and the entire value flashes. Use the **UP** arrow key to modify the desired display value. Press **ENTER** to store the new value.

***Iout#2 Mode** This function sets analog output #2 for temperature or PAA.

Temp Units This function sets the display units for temperature measurement. Press **ENTER** to initiate *User Entry* mode, and the entire value flashes. Use the **UP** arrow key to modify the desired display value. The choices are °F and °C. Press **ENTER** to store the new value.

Control Menu [CONTROL]

The *Control* menu contains all of the output control user settings:

Set 0V #1
Set 2.5V #1
Set 0V #2
Set 2.5V #2

These functions set the output range for each of the two instrument outputs. The value stored for the 0V point may be higher or lower than the value stored for the 2.5V point.

The entry values are limited to values within 20.00 ppm and must be separated by at least 1% of this range. Use the **LEFT** arrow key to select the first digit to be modified. Then use the **UP** and **LEFT** arrow keys to select the desired numerical value. Press **ENTER** to store the new value.

Output #1 is always in units of ppm, as it is fixed to track peracetic acid. Output #2 is in either units of ppm, PAA or °C/°F, depending on whether PAA, or temperature is set for Out#2 in the *CONFIG* menu.

Diagnostics Menu [DIAG]

The *Diagnostics* menu contains all of the user settings that are specific to the system diagnostic functions, as well as functions that aid in troubleshooting application problems.

Set Hold

The *Set Hold* function locks the current loop output values on the present process value, and halts operation of the PID controller. This function can be used prior to calibration, or when removing the sensor from the process, to hold the output in a known state. Once *HOLD* is released, the outputs return to their normal state of following the process input. The transfer out of *HOLD* is bumpless on the both analog outputs. That is, the transfer occurs in a smooth manner rather than as an abrupt change. An icon on the display indicates the *HOLD* state, and the *HOLD* state is retained even if power is cycled. Press **ENTER** to initiate *User Entry* mode, and entire value flashes. Use the **UP** arrow key to modify the desired value, selections are **ON** for engaging the *HOLD* function and **OFF** to disengage the function. Press **ENTER** to store the new value.

NOTE: When the Relay Option Board is installed, the *Set Hold* function holds BOTH current levels, as well as ALL relay settings.

The *Set Hold* function can also hold at an output value specified by the user. To customize the hold value, first turn the *HOLD* function on. Press the **ESC** key to go to the *DIAG* menu and scroll to *Sim Output* using the **UP** arrow key. Press **ENTER**. Follow the instructions under *"Sim Out" on page 24*.

Fault List

The *Fault List* screen is a read-only screen that allows the user to display the cause of the highest priority failure. The screen indicates the number of faults present in the system and a message detailing the highest priority fault present.

NOTE: Some faults can result in multiple displayed failures due to the high number of internal tests occurring. As faults are corrected, they are immediately cleared.

Faults are not stored; therefore, they are immediately removed if power is cycled. If the problem causing the faults still exists, however, faults display again after power is re-applied and a period of time elapses during which the diagnostic system re-detects them. The exception to this rule is the calibration failure. When a calibration fails, no corrupt data is stored. Therefore, the system continues to function normally on the data that was present before the calibration was attempted.

After 30 minutes or if power to the transmitter is cycled, the failure for calibration clears until calibration is attempted again. If the problem still exists, the calibration failure reoccurs. Press **ENTER** to initiate view of the highest priority failure. The display automatically returns to normal after a few seconds.

Sim Out

The *Sim Out* function allows the user to simulate the PAA level of the instrument in the user selected display range. The user enters a ppm value directly onto the screen, and the output responds as if it were actually receiving the signal from the sensor. This allows the user to check the function of attached monitoring equipment during setup or troubleshooting. Escaping this screen returns the unit to normal operation. Press **ENTER** to initiate the *User Entry* mode and the rightmost digit of the value flashes. Use arrow keys to modify desired value.

The starting display value is the last read value of the input. The output is under control of the *SIM* screen until the **ESC** key is pressed.

NOTE: If the *HOLD* function is engaged before the *Sim* Output function is engaged, the simulated output remains the same even when the **ESC** key is pressed. Disengage the *HOLD* function to return to normal output.

Auto-Off

Enables the automatic shutoff feature for the instrument. If ON, the instrument automatically shuts off in 30 minutes after no keys are pressed to save power. If OFF, the meter stays powered continuously until either user manually turns unit off or the internal power switch on the battery board is turned OFF, or the battery voltage drops to the cutoff point (approximately 10 days on standard AA alkaline batteries.) Press **ENTER** to initiate *User Entry* mode, and the entire value flashes. Use the **UP** arrow key to modify the desired display value. The choices are **OFF** and **ON**. Press **ENTER** to store the new value.

Backlight

Allows feature to either be turned on or off.

Set Default

The *Set Default* function allows the user to return the instrument back to factory default data for all user settings. It is intended to be used as a last resort troubleshooting procedure. All user settings are returned to the original factory values. Hidden factory calibration data remains unchanged. Press **ENTER** to initiate *User Entry* mode and the value "NO" flashes. Use the **UP** arrow key to modify value to *YES* and press **ENTER** to reload defaults.

CALIBRATION

PAA Calibration

Once power is applied, the sensor must be given time to stabilize. Establishing a stable zero is critical to the proper operation of the monitor. A complete calibration includes zeroing and spanning the sensor. It is generally unnecessary to set the zero at every calibration, however, it should be done during the initial installation. This is best done by following the zeroing procedure below.

PAA Zero Cal

PAA sensors have extremely low offset currents at zero. For this reason, it is normally sufficient to simply leave the zero at the factory default of 0.0 nA. As an alternative, an electronic zero can be set by disconnecting the sensor from the cable and performing steps 1…5 below.

The steps below assume that the sensor has been prepared in accordance with *"Sensor Assembly" on page 13*.

NOTE: The 8 hour waiting time in step 2 below is not required if the monitor has been running for 24 hours prior to zeroing. If the unit has been running with the sensor connected, the sensor normally returns to a stable zero within 15 minutes.

1. Connect the sensor to the electronics by plugging the cable plug into the receptacle on the top of the sensor.
2. Place about an inch of water in a small beaker or other convenient container and immerse the tip of the sensor. The water used need not be distilled, but it must not contain any peracetic acid. For submersible sensors, submerge the entire sensor in a bucket of PAA free water. Allow the sensor to sit undisturbed for at least 8 hours.
3. Scroll to the *CAL* menu section using the **MENU** key and press **ENTER** or the **UP** arrow key. "Cal PAA" displays.
4. Press the **ENTER** key. The screen displays a flashing "1-Ref" for span calibration or a "2-Zer" for zero calibration. Using the **UP** arrow key, set for a 2-Zer zero calibration and press **ENTER**.

   The system now begins acquiring data for the sensor zero calibration value. As data is gathered, the units for sensor current in nanoamps (nA) and temperature may flash. Flashing units indicate that this parameter is unstable. The calibration data point acquisition stops only when the data remains stable for a pre-determined amount of time. This can be overridden by pressing **ENTER**. If the data remains unstable for 10 minutes, the calibration fails and the message "Cal Unstable" displays.
5. If accepted, the screen displays the message "PASS" with the new sensor zero reading (offset), then it returns to the main measurement display. If the calibration fails, a message indicating the cause of the failure displays and the *FAIL* icon turns on. The range of acceptable value for sensor offset is –25 nA…25 nA. Should a "FAIL" occur, carefully inspect the sensor for a tear in the membrane. It is probably necessary to rebuild the sensor as described in *"Sensor Assembly" on page 13*. Should the offset value remain high and result in calibration failures, review the *"System Maintenance" on page 28*, and then contact the service dept. at Badger Meter for further assistance.

   The sensor zero offset value in nA from the last zero calibration is displayed on the lower line of the *Default* menus for information purposes.

PAA Span Cal

Span calibration of the system must be done against a laboratory measurement on the same sample that the sensor is measuring. A sample should be collected from the inlet line feeding the flowcell and quickly analyzed for peracetic acid. When calibrating, it is best to have a reasonably high concentration of peracetic acid in the system. The higher the value, the smaller the calibration errors caused by errors in the laboratory analytical procedure.

Start flowcell and calibrate system as follows:

1. Place the previously zeroed sensor into the sensor chamber of the flowcell assembly. The sensor is inserted into the side of the flowcell and is sealed in place with a double O-ring. The O-rings are lubricated at the factory to allow the sensor to slide smoothly into place. If insertion becomes difficult, use a small amount of silicon grease to lubricate the O-rings. If the low-volume flowcell is used, screw the sensor into the flowcell until the membrane cap bottoms out on the acrylic flowcell. Do not over-tighten.
2. Turn on the inlet water flow to the flowcell and adjust the inlet flow rate so that water is overflowing from the inlet chamber. The best performance is obtained when some water is always overflowing. This maintains constant flow and pressure on the sensor at all times.
3. Allow the system to operate undisturbed for 30…60 minutes. Assuming the water contains PAA, the display reads positive sensor current values. If the system is stable, the value on the display increases to some ppm value and remain at that level. At that point, calibration can continue.
4. If the sensor is online, the user may want to set the output *HOLD* feature prior to calibration to lock out any output fluctuations.
5. Scroll to the *CAL* menu section using the **MENU** key and press **ENTER** or the **UP** arrow key. "Cal PAA" displays.
6. Press the **ENTER** key. The screen displays a flashing "1-Ref" for span calibration or a "2-Zer" for zero calibration. Using the **UP** arrow key, set for a 1-Ref span calibration and press **ENTER**.
7. The system now begins acquiring data for the calibration value. As data is gathered, the units for ppm and temperature may flash. Flashing units indicate that this parameter is unstable. The calibration data point acquisition stops only when the data remains stable for a pre-determined amount of time. This can be overridden by pressing **ENTER**. If the data remains unstable for 10 minutes, the calibration fails and the message "Cal Unstable" displays.
8. The screen displays the last measured ppm value and a message displays prompting the user for the lab value. The user must then modify the screen value with the arrow keys and press **ENTER**. The system then performs the proper checks.
9. If accepted, the screen displays the message "PASS" with the new sensor slope reading, and then it returns to the main measurement display. If the calibration fails, a message indicating the cause of the failure displays and the *FAIL* icon turns on. The range of acceptable values for sensor slope is 20%…500%. It may be necessary to rebuild the sensor as described in *"Sensor Assembly" on page 13*. Should the slope value remain out of range and result in calibration failures, review *"System Maintenance" on page 28*, then contact the service dept. at Badger Meter for further assistance.

The sensor offset value in % from the last span calibration is displayed on the lower line of the *Default* menus for information purposes.

Temperature Calibration

The temperature calibration sequence is essentially a 1-point offset calibration that allows adjustments of approximately ±5° C.

The sensor temperature may be calibrated on line, or the sensor can be removed from the process and placed into a known solution temperature reference. In any case, it is critical that the sensor be allowed to reach temperature equilibrium with the solution in order to provide the highest accuracy. When moving the sensor between widely different temperature conditions, it may be necessary to allow the sensor to stabilize as much as one hour before the calibration sequence is initiated. If the sensor is online, the user may want to set the output *HOLD* feature prior to calibration to lock out any output fluctuations.

1. Scroll to the *CAL* menu section using the **MENU** key and press **ENTER** or the **UP** arrow key.
2. Press the **UP** arrow key until "Cal Temp" is displayed.
3. Press the **ENTER** key. The message "Place sensor in solution then press ENTER" displays. Move the sensor into the calibration reference (if it hasn't been moved already) and wait for temperature equilibrium to be achieved. Press **ENTER** to begin the calibration sequence.
4. The calibration data gathering process begins. The message "Wait" flashes as data is accumulated and analyzed. The "°C" or "°F" symbol may flash periodically if the reading is too unstable.
5. The message "Adjust value - press ENTER" displays, and the rightmost digit begins to flash, indicating that the value can be modified. Using the **UP** and **LEFT** arrow keys, modify the value to the known ref solution temperature. Adjustments up to ± 5° C from the factory calibrated temperature are allowed. Press **ENTER**.

Once completed, the display indicates "PASS" or "FAIL". If the unit fails, the temperature adjustment may be out of range, the sensor may not have achieved complete temperature equilibrium or there may be a problem with the temperature element. In the event of calibration failure, it is recommended to attempt the calibration again immediately.

SYSTEM MAINTENANCE

General

The Q45-85 Peracetic Acid System generally provides unattended operation over long periods of time. With proper care, the system should continue to provide measurements indefinitely. For reliable operation, maintenance on the system must be done on a regular schedule. Keep in mind that preventive maintenance on a regular schedule is much less troublesome than emergency maintenance that always seems to come at the wrong time.

Analyzer Maintenance

No unusual maintenance of the analyzer is required if installed according to the guidelines of this operating manual. If the enclosure door is frequently opened and closed, it would be wise to periodically inspect the enclosure sealing gasket for breaks or tears.

Sensor Maintenance

Sensor maintenance is required for accurate measurements. The primary requirement is simply to keep the sensor membrane clean. The membrane is a micro-porous polymer that is resistant to anything that is encountered in water streams. However, deposits can form on the surface or in the pores of the membrane, and these deposits reduce the sensitivity. Certain constituents in water, mainly iron and manganese, form precipitates that can sometimes form a coating on the membrane.

Because membranes are micro-porous, they can be relatively difficult to clean effectively. Immersing the tip of the sensor in 1N nitric acid solution sometimes removes deposits that cause low sensitivity, but this is not always the case. The recommended practice is to simply replace the membrane when it becomes fouled. To change a membrane, follow the *"Sensor Assembly" on page 13*. Do not reuse the electrolyte from the sensor when changing a membrane. Always refill with fresh electrolyte. The electrolyte is stable and does not have a limited shelf life.

Refer again to the explanation of the sensor slope number after an accepted span calibration on the lower *MEASURE* screen. In normal operation, the slope of the sensor output decreases over time as the membrane becomes fouled. This reduction indicates that the sensor is losing sensitivity to peracetic acid. It is good practice to replace the membrane if the slope number falls to 30…40%. The value does not go below 20%.

Even if no buildup is apparent on the membrane, it should be changed on a regular schedule. The recommended membrane change interval is every 3 months. For high purity water applications, this can probably be extended if desired, but a more frequent changing interval is a small price to pay for avoiding membrane failure at the wrong time.

While the sensor is disassembled for membrane changing, examine the condition of the O-rings on both ends of the electrolyte chamber. If the O-rings show any signs of damage, replace them with new ones from the spare parts kit. It is good practice to change these O-rings once a year, regardless of their condition.

Sensor Acid Cleaning

Over an extended operating period, PAA sensors can slowly accumulate deposits on the surface of the gold electrode. Typically, this type of buildup occurs over years of operation, but can sometimes occur more quickly in high levels of manganese, iron or other metals are dissolved in the water. The gold electrode can be "acid cleaned" using nitric acid solutions.

⚠ WARNING

THIS ACID CLEANING PROCEDURE INVOLVES THE USE OF HIGHLY CORROSIVE ACID SOLUTIONS. IT SHOULD ONLY BE COMPLETED BY TRAINED PERSONNEL USING PROTECTIVE EYEWEAR AND GLOVES. IF THERE IS ANY DOUBT ABOUT YOUR ABILITY TO SAFELY ACCOMPLISH THIS PROCEDURE, RETURN THE SENSOR TO BADGER METER FOR FACTORY CLEANING!

To acid clean the electrode assembly, remove the electrolyte chamber from the sensor so that the so that both electrodes are exposed. Then follow the procedure below:

1. Place a small amount of 50% nitric acid solution in a beaker. Put in just enough so that the gold tip of the sensor can be submerged without any contact with the silver coil.
2. Allow the sensor to soak in this acid solution for 2 minutes. Remove the sensor body and rinse the gold tip thoroughly with distilled water. Discard the nitric acid safely and according to all environmental regulations.
3. Fill the beaker with distilled water to the level sufficient to submerge both the tip and the silver coil. Do not allow the connector at the back of the sensor to be submerged. Allow the electrodes to soak in distilled water for 30 minutes.
4. Put a new membrane and fresh electrolyte in the electrolyte chamber and reassemble the sensor. Connect to the PAA monitor electronics and allow the sensor to stabilize for at least 24 hours. The sensor can be placed in the flowcell with process water running through it during stabilization. However, the readings are not useful for 24 hours.

Flowcell Maintenance

The maintenance on the flowcell is simple cleaning. The flowcell is clear to make examination of the condition of the sensor easier without interfering with operations. The flowcell may be cleaned by wiping or by washing with detergents or dilute acids. Do not try to clean with solvents as the acrylic may craze or crack.

Change the O-ring in the flowcell yearly or if any damage is observed. If insertion of the sensor into the flowcell becomes difficult, use silicon grease to lubricate the O-rings that hold the sensor in place. Use only enough grease to provide surface lubrication. Excess grease could foul the sensor membrane.

TROUBLESHOOTING

General

The information included in this section is intended to be used in an attempt to quickly resolve an operational problem with the system. During any troubleshooting process, it saves the most time if the operator can first determine if the problem is related to the analyzer, sensor or some external source. Therefore, this section is organized from the approach of excluding any likely external sources, isolating the analyzer and finally isolating the sensor. If these procedures still do not resolve the operational problems, any results the operator may have noted here are very helpful when discussing the problem with the factory technical support group.

External Sources of Problems

To begin this process, review the connections of the system to all external connections:

1. Carefully examine any connections for loose wiring or bad wire stripping.
2. Check sensor membrane for fouling. Look closely for signs of grease or oil that may be present. Replace membrane and electrolyte, allow to stabilize and re-check. See *"Sensor Assembly" on page 13* for proper procedure.

Analyzer Tests

1. Disconnect power and completely disconnect all output wiring coming from the analyzer. Remove sensor wiring, relay wiring and analog output wiring. Re-apply power to the analyzer.
2. Using the *Simulate* feature, check operation of outputs with a DMM.
3. Check cell drive circuit. With a digital voltmeter (DVM), measure the voltage between terminals ORANGE and WHITE on the inside of the monitor to verify that the millivolt value is actually –400 mV.
4. Check TC drive circuit. Place a wire-short between the GREEN and BLACK terminals. With a digital voltmeter (DVM), measure the voltage between the BLACK and RED terminals on the back of the monitor to verify that the TC drive circuit is producing about 4.8…5.1V DC open circuit. Remove DVM completely and connect a 100 Ohms resistor from the BLACK to RED terminals. The temperature reading should display approximately 0° C and the PAA reading should display approximately 0 ppm.

Display Messages

The Q45 Series instruments provide a number of diagnostic messages that indicate problems during normal operation and calibration. These messages appear as prompts on the secondary line of the display or as items on the *Fault List*.

The following messages appear as prompts:

Message	Description	Possible Correction
Max is 200	Entry failed, maximum user value allowed is 200.	Reduce value to ≤ 200.
Min is 20	Entry failed, minimum value allowed is 20.	Increase value to ≥ 20.
Cal Unstable	Calibration problem, data too unstable to calibrate. Icons do not stop flashing if data is too unstable. User can bypass by pressing **ENTER**.	Clean sensor, get fresh cal solutions, allow temperature and conductivity readings to fully stabilize, do not handle sensor or cable during calibration.
Out of Range	Input value is outside selected range of the specific list item being configured.	Check manual for limits of the function to be configured.
Locked!	Transmitter security setting is locked.	Enter security code to allow modifications to settings.
Unlocked!	Transmitter security has just been unlocked.	Displayed just after security code has been entered.
Sensor High	The raw signal from the sensor is too high and out of instrument range.	Check wiring connections to sensor.
Sensor Low	The raw signal from the sensor is too low.	Check wiring connections to sensor.
PAA High	The PAA reading is greater than the maximum of the user-selected range.	The PAA reading is over operating limits. Set measuring range to the next highest level.
Temp High	The temperature reading is > 55° C.	The temperature reading is over operating limits. Check wiring and expected temp level. Perform RTD test as described in sensor manual. Recalibrate sensor temperature element if necessary.
Temp Low	The temperature reading is < –10° C.	Same as "Temp High" above.
TC Error	TC may be open or shorted.	Check sensor wiring and perform RTD test as described in sensor manual. Check j-box connections.
PAA Cal Fail	Failure of PAA calibration. *FAIL* icon does not extinguish until successful calibration has been performed, or 30 minutes passes with no keys used.	Clean sensor, redo zero and span calibration. If still failure, sensor slope may be less than 25% or greater than 250%. Perform sensor tests as described in *"Sensor Tests" on page 32*. Replace sensor if still failure.
TC Cal Fail	Failure of temperature calibration. *FAIL* icon does not extinguish until successful calibration has been performed, or 30 minutes passes with no keys being pressed.	Clean sensor, check cal solution temperature and repeat sensor temp calibration. TC calibration function only allows adjustments of ± 6° C. If still failure, perform sensor tests as described in *"Sensor Tests" on page 32*. Replace sensor if still failure.
EPROM Fail	Internal nonvolatile memory failure.	System failure, consult factory.
Chcksum Fail	Internal software storage error.	System failure, consult factory.
Display Fail	Internal display driver fail.	System failure, consult factory.

Sensor Tests

1. Check the membrane condition. A membrane that is not stretched smoothly across the tip of the sensor causes unstable measurements. If necessary, change membrane and electrolyte.
2. Residual PAA sensors can be tested with a digital voltmeter (DVM) to determine if a major sensor problem exists. Follow the steps below to verify sensor integrity:
   a. Disconnect the five sensor wires from the back of the PAA monitor. Those wires are color coded white, brown, red, black and green.

      NOTE: The brown wire may be replaced with an orange wire in some cables.

   b. Remove the electrolyte chamber from the sensor and dry the electrodes with a paper towel.
   c. Connect a DVM between the white and brown (or orange) wires. Reading resistance, you should find an open circuit value of infinite resistance. There must be no measurable resistance at all between these wires. Any resistance at all indicates either water in the cable connector or the breakdown in an electrode seal.
   d. Connect a DVM between the red and white wires. The red wire is part of the RTD circuit and the white wire is part of the measuring cell. There should be no connection. Reading resistance, you should find an open circuit value of infinite resistance. Any resistance at all indicates either water in the cable connector or the breakdown in an electrode seal.
   e. Connect the DVM between the red and black wires. These are the RTD leads, and you should find a resistance value that depends on the temperature. Reading resistance between the red and green wires should give exactly the same values as between red and black. The table below lists the resistance values for various temperatures:

Temperature	Resistance
0° C	100.0 Ω
5° C	101.9 Ω
10° C	103.9 Ω
15° C	105.8 Ω
20° C	107.8 Ω
25° C	109.7 Ω
30° C	111.7 Ω
35° C	113.6 Ω
40° C	115.5 Ω
45° C	117.5 Ω
50° C	119.4 Ω

   If you suspect that water has gotten into a cable connection on a flow type sensor or into the plug connection of a submersible sensor, disconnect the cable and allow the parts of the sensor to sit in a warm place for 24 hours. If water in the connector is the problem, it should dry out sufficiently to allow normal sensor operation. However, steps 2c…2e above have to be repeated after drying to see if the problem is gone.
3. Acid clean the sensor electrodes in accordance with the procedure on *"Sensor Acid Cleaning" on page 29*.

SPARE PARTS

Part No.	Description
**	Battery powered monitor electronics assembly
00-1620	PAA sensor, flow type
02-0018	Sensing element body, (for #00-1620)
00-1756	PAA sensor, submersion type with 25 ft cable
02-0020	Submersion sensing module, (for #00-1756)
02-0019	Submersion element body, (for #02-0020)
02-0031	Submersion holder, 25 ft cable (for #00-1756)
03-0029	Sensor interconnect cable with connector, 25 ft
03-0315	Vented electrolyte chamber
45-0007	Electrolyte chamber
45-0290	Membrane holder, Kynar
05-0090*	PAA Membranes, pkg. of 10
05-0004*	Spare Parts Kit, screw and O-ring
09-0060*	PAA electrolyte, 4 oz (120 cc)
00-0043	Constant-Head Flowcell assembly with mounting plate
42-0014	Flowcell O-ring (each)
31-0173	20 Pos. Ribbon cable assembly for AC units
00-1522	Sealed Flowcell Assy

* Instrument is supplied with sufficient spare parts for 6…12 months of operation. For 2 year spare parts inventory, 3 each of the items marked with an asterisk are required.

** Consult factory for item numbers of replacement electronic assembly.

Lock/Unlock Code: 1456

INTENTIONAL BLANK PAGE

INTENTIONAL BLANK PAGE

Trademarks appearing in this document are the property of their respective entities. Due to continuous research, product improvements and enhancements, Badger Meter reserves the right to change product or system specifications without notice, except to the extent an outstanding contractual obligation exists. © 2024 Badger Meter, Inc. All rights reserved.