Preso®
Differential Pressure Flow Meters

Venturi Flow Meter

Model LPL Low Pressure Loss

DESCRIPTION

The Venturi Model LPL (Low Pressure Loss Venturi Design) is a Venturi Nozzle design, differential pressure flow device. The successful Low-Loss design has over 35 years of proven field performance in a wide variety of applications. The reduced costs of operating are inherent with the design. The low installation costs are due to the short laying length.

CONFIGURATION

The Venturi inlet is cylindrical and has the same diameter as the incoming pipe section. The meter has high and low pressure sensing ports. The inlet of the meter is followed by a precise smooth contoured radius section that causes a uniform change in fluid velocity to reduce permanent pressure loss to 3%. The beta ratio is selected by the manufacturer according to standard engineering formulas. The discharge coefficient (Cd) is linear and stable in the operating flow range.

ACCURACY AND REPEATABILITY

The accuracy of the flow element is within ±3.0% uncalibrated (±0.5% calibrated) with a repeatability of ±0.1% and turndown of 10:1 in the corresponding range of Reynolds' Numbers. For custody transfer applications the Venturi is wet flow tested by an independent NIST certified laboratory under the design operating conditions and piping configurations.

FEATURES

- A Venturi provides longevity, reliability and long term performance
- Provides an uncalibrated accuracy of ±3% (±0.5% calibrated) with a repeatability of ±0.1%
- Is designed in accordance to ASME and ISO standards
- Offers the highest "As Built" accuracy
- Flow is restricted for the shortest period of time
- Low pressure loss
- Low cost
- Low accuracy
- Standard and Unique Alloys
- Durable solution for liquids, gas, steam and mixed media
- Easily installed in any position with minimal straight pipe requirements (5 pipe diameters upstream and 2 pipe diameters downstream.

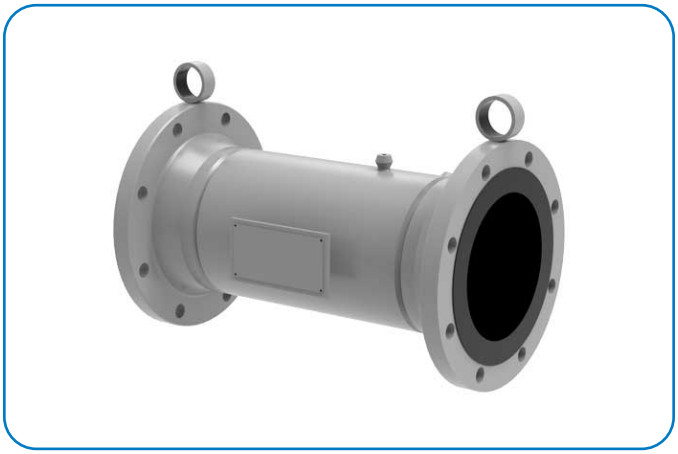

APPLICABLE FLUIDS

Liquids, gases and steam.

OPTIONS

- RTD

BENEFITS

- Flow is restricted for the shortest period of time
- Lowest pressure loss (3% of DP maximum)
- Low cost
- Low accuracy
- Resists wear, maintenance free (no moving parts)
- Custom Fit lay length and end connections
- Minimal straight pipe distance requirements
- Turndown ratio of 10:1
- Repeatability of ± 0.1%
- Mounts in any position
- Low permanent pressure-loss design

Badger Meter

VEN-DS-00796-EN-04 (August 2021)

Product Data Sheet

SPECIFICATIONS

Applications	Liquids, Gases, Steam and more
Pipe Sizes	0.5…60 in. (13…1524 mm) and larger
Temperature Range	Up to 1500° F (816° C)
Pressure Range	Up to 9000 PSI
Pressure Loss	3% of maximum DP
Flow Range	0.25…825,000 GPM (0.95…3,123,000 LPM)
Accuracy	±3.0% uncalibrated; up to 0.5% calibrated
Turndown Ratio	10:1
Process Connections	NPT, flanged, butt weld, socket weld
Instrument Connections	NPT, socket weld
Standard Beta Ratios	–10 –20, –38, –65 Exact sizing available to provide custom beta ratios

PART NUMBERING CONSTRUCTION

NPT Threaded

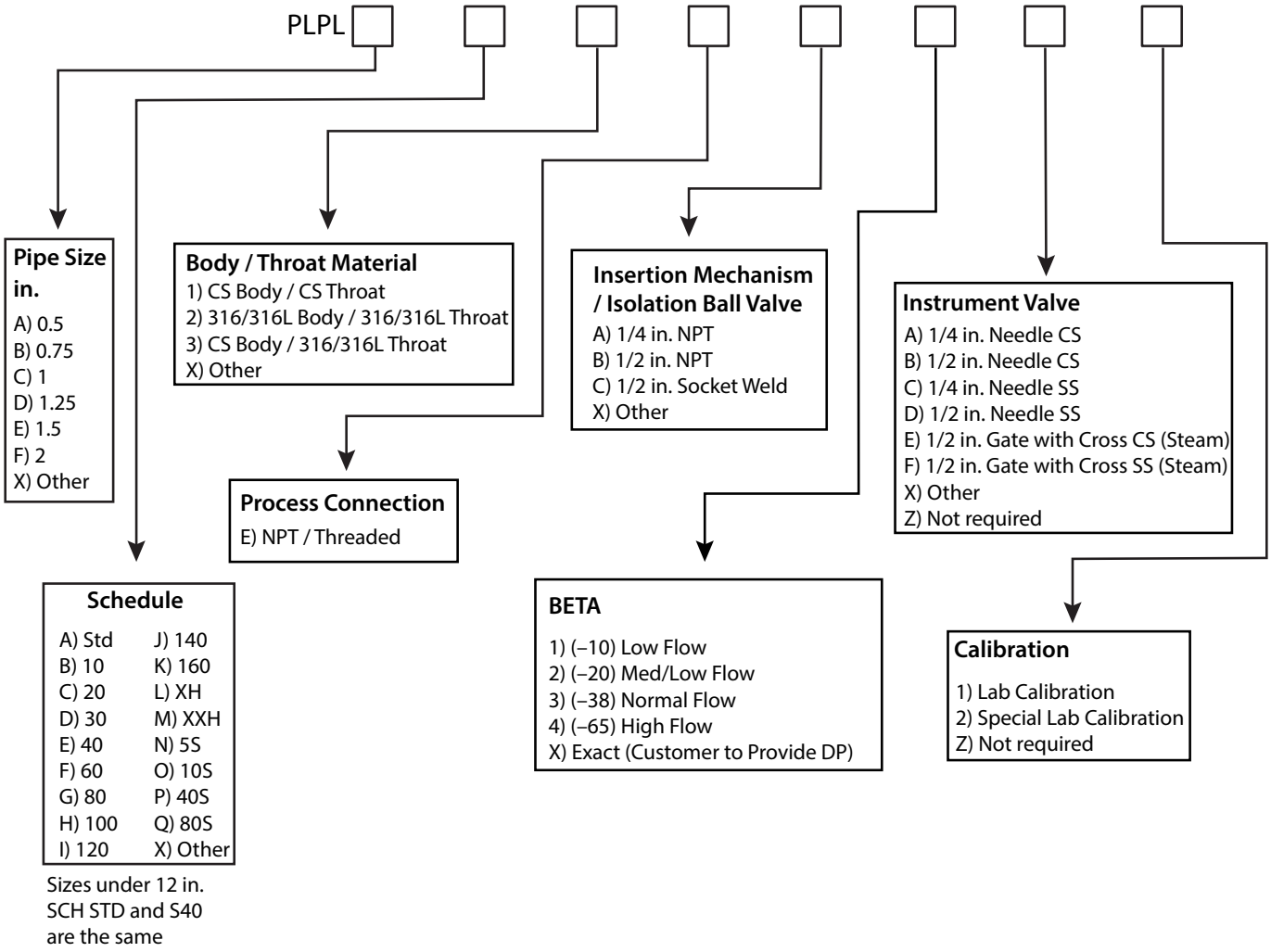

Butt Weld

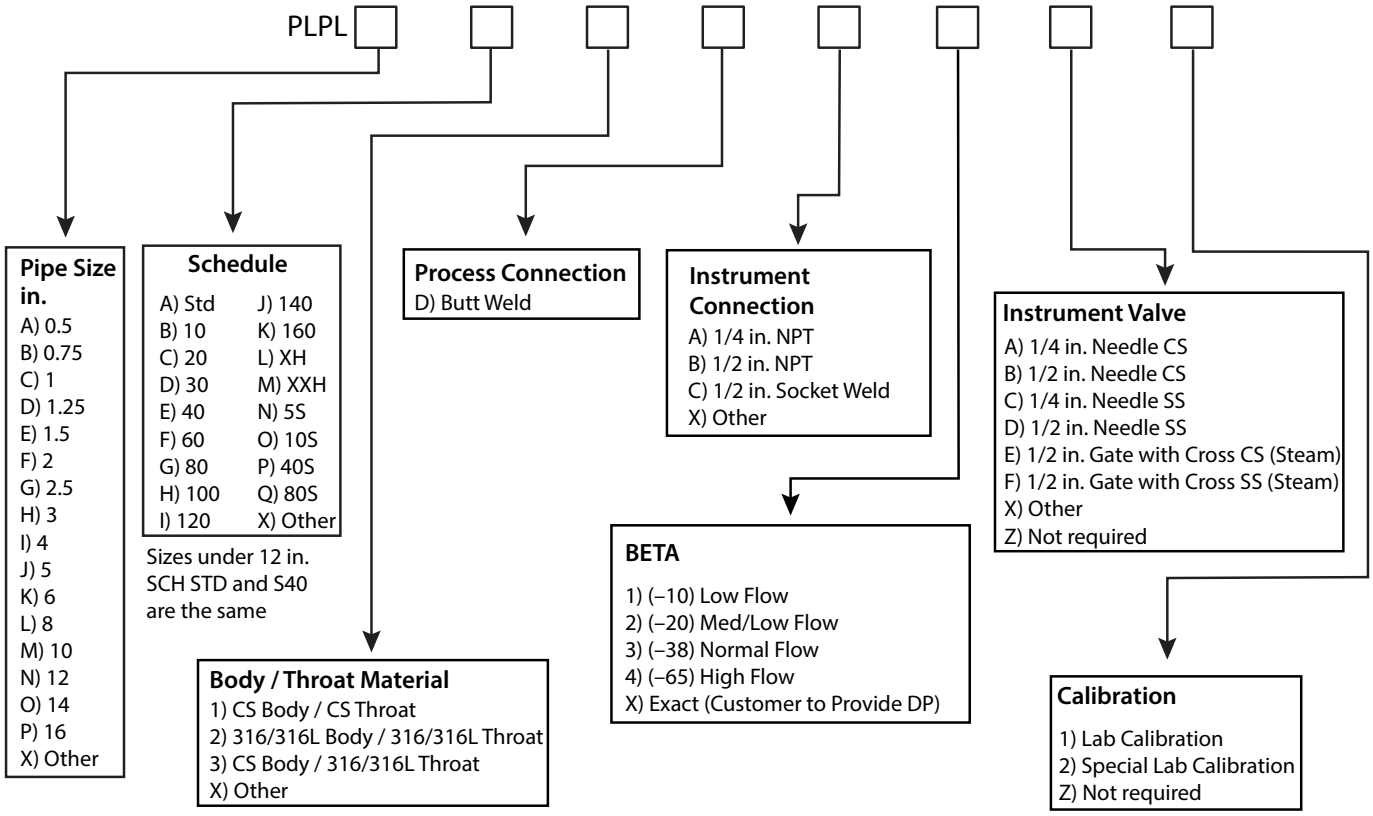

Flanged

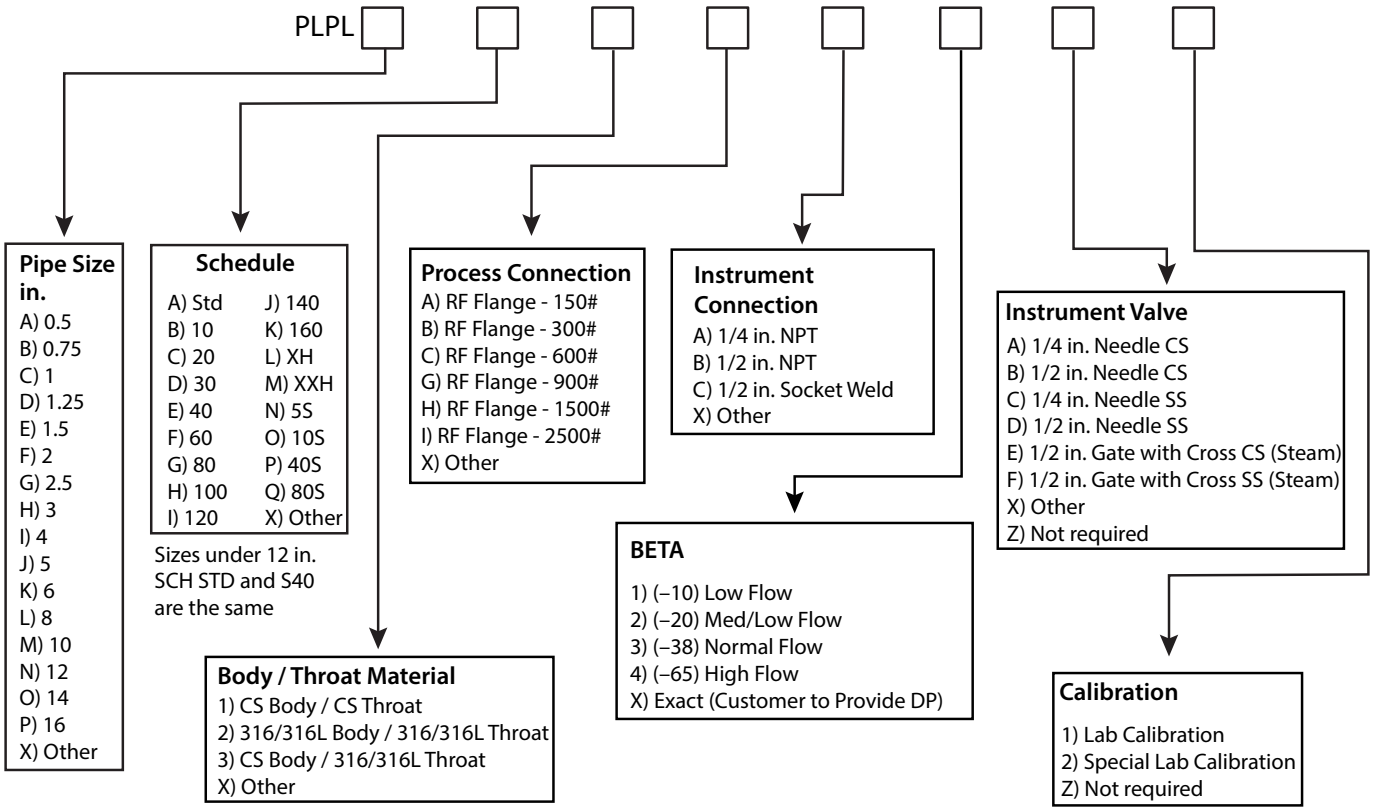

Socket Weld

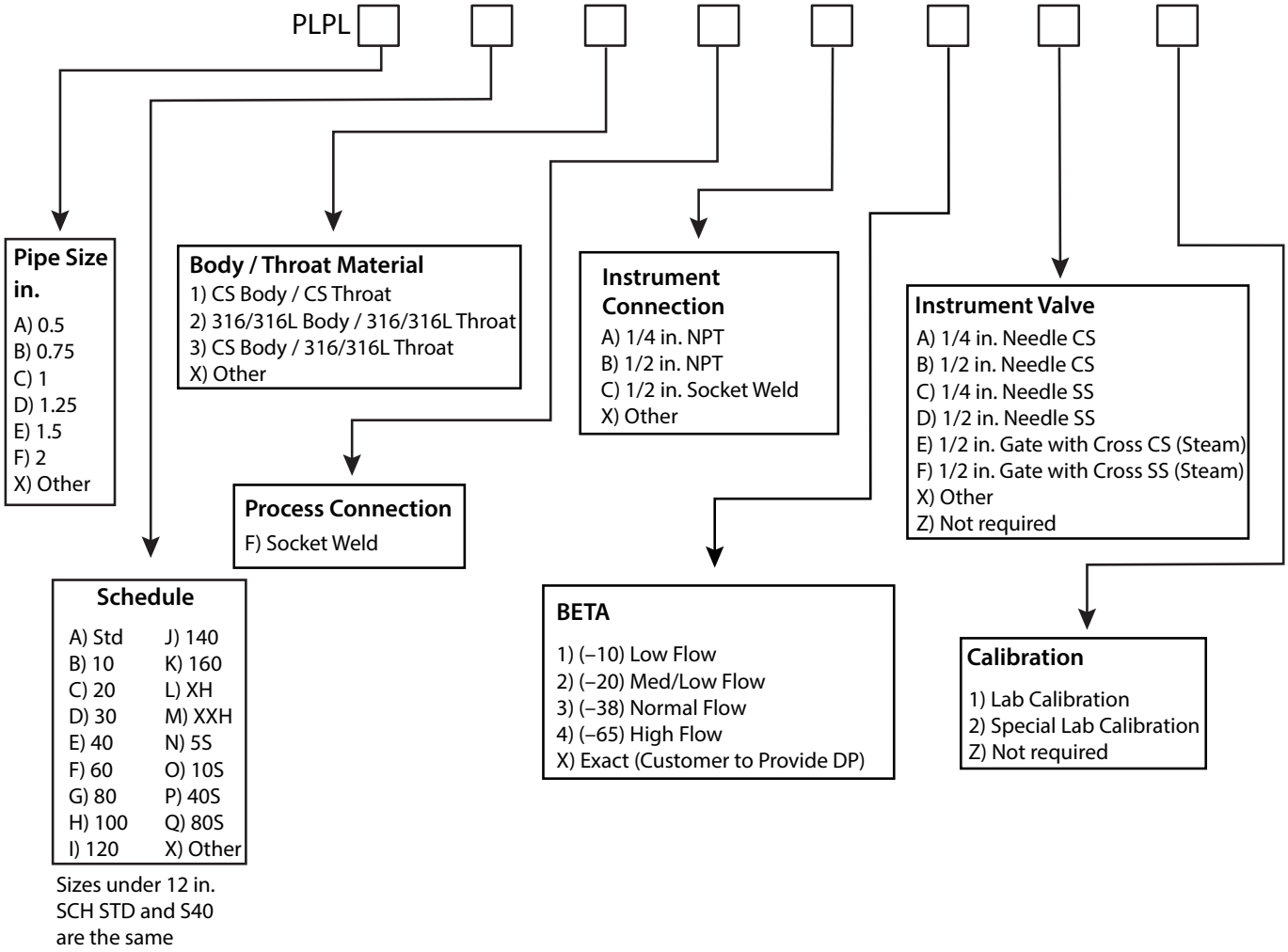

Control. Manage. Optimize.

Preso and Ellipse are registered trademarks of Badger Meter, Inc. Other trademarks appearing in this document are the property of their respective entities. Due to continuous research, product improvements and enhancements, Badger Meter reserves the right to change product or system specifications without notice, except to the extent an outstanding contractual obligation exists. © 2021 Badger Meter, Inc. All rights reserved.

www.badgermeter.com